ski-doo

BRP

DEEP SNOW E-TEC SERIES

OPERATOR'S GUIDE

Includes Safety, Use and Maintenance Information

2025

⚠ WARNING

Read this guide thoroughly. It contains important safety information.
Minimum recommended operators age: 16 years old.
Keep this operator's guide with the vehicle at all times.

520003291 Rev1

Original Instruction

CALIFORNIA PROPOSITION 65 WARNING

⚠ WARNING

Operating, servicing and maintaining an off-road vehicle can expose you to chemicals including engine exhaust, carbon monoxide, phthalates, and lead, which are known to the State of California to cause cancer and birth defects or other reproductive harm. To minimize exposure, avoid breathing exhaust, do not idle the engine except as necessary, service your vehicle in a well-ventilated area and wear gloves or wash your hands frequently when servicing your vehicle. For more information go to www.p65warnings.ca.gov/products/passenger-vehicle.

NOTE:
In Canada, products are distributed and serviced by Bombardier Recreational Products Inc. (BRP).
In the USA, products are distributed and serviced by BRP US Inc.
In the European Economic Area (which is comprised of the member states of the European Union plus the United Kingdom, Norway, Iceland and Liechtenstein), the Commonwealth of the Independent States (including Ukraine and Turkmenistan) and Turkey, products are distributed and serviced by BRP European Distribution S.A. and other affiliates or subsidiaries of BRP.
For all other countries, products are distributed and serviced by Bombardier Recreational Products Inc. (BRP) or its affiliates.

™® Trademarks of BRP or its affiliates.
This is a non-exhaustive list of trademarks that are the property of Bombardier Recreational Products Inc. or its affiliates.
Trademarks may not be registered in every jurisdictions:

BRP GO!™	D.E.S.S.™	E-TEC®
FREERIDE®	HPG™	RAVE®
RER™	ROTAX®	SKI-DOO®
SUMMIT®	XPS®	

The KYB Pro series is a registered mark of KYB America LLC.

All rights reserved. No parts of this Operator's Guide may be reproduced in any form without the prior written permission of Bombardier Recreational Products Inc.
©Bombardier Recreational Products Inc. (BRP) 2024

Deutsch	Dieses Handbuch ist möglicherweise in Ihrer Landessprache verfügbar. Bitte wenden Sie sich an Ihren Händler oder besuchen Sie: **www.operatorsguides.brp.com**
English	This guide may be available in your language. Check with your dealer or go to: **www.operatorsguides.brp.com**
Español	Es posible que este manual esté disponible en su idioma. Consulte a su distribuidor o visite: **www.operatorsguides.brp.com**
Français	Ce guide peut être disponible dans votre langue. Vérifier avec votre concessionnaire ou aller à: **www.operatorsguides.brp.com**
Italiano	Questa guida potrebbe essere disponibile nella propria lingua. Contattare il concessionario o consultare: **www.operatorsguides.brp.com**
中文	本手册可能有您的语种的翻译版本。请向经销商问询，或者登录 www.operatorsguides.brp.com 查询。
日本語	このガイドは、言語によって翻訳版が用意されています。. ディーラーに問い合わせるか、次のアドレスでご確認ください： **www.operatorsguides.brp.com**
Nederlands	Deze handleiding kan beschikbaar zijn in uw taal. Vraag het aan uw dealer of ga naar: **www.operatorsguides.brp.com**
Norsk	Denne boken kan finnes tilgjengelig på ditt eget språk. Kontakt din forhandler eller gå til: **www.operatorsguides.brp.com**
Português	Este manual pode estar disponível em seu idioma. Fale com sua concessionária ou visite o site: **www.operatorsguides.brp.com**
Русский	Воспользуйтесь руководством на вашем языке. Узнайте о его наличии у дилера или на странице по адресу **www.operatorsguides.brp.com**
Suomi	Käyttöohjekirja voi olla saatavissa omalla kielelläsi. Tarkista jälleenmyyjältä tai käy osoitteessa: **www.operatorsguides.brp.com**
Svenska	Denna bok kan finnas tillgänglig på ditt språk. Kontakta din återförsäljare eller gå till: **www.operatorsguides.brp.com**

Model	Package	Engine
Freeride	-	850 E-TEC
		850 E-TEC Turbo R
Summit	Adrenaline	600R E-TEC
		850 E-TEC
	Adrenaline with Edge Package	600R E-TEC
		850 E-TEC
	HCE	850 E-TEC
		850 E-TEC Turbo R
	X	850 E-TEC
		850 E-TEC Turbo R
	X with Expert Package	850 E-TEC
		850 E-TEC Turbo R

TABLE OF CONTENTS

..... 1

GENERAL INFORMATION

GENERAL INFORMATION **10**
Know Before you Go 10
Safety Messages 10
About this Operator's Guide 11
Respect of the Environment 12
BE A RESPONSIBLE RIDER 13

SAFETY INFORMATION

BEFORE YOU GO **16**
Operating Age and Ability 16
Drugs and Alcohol 16
Avalanche Safety Training Courses 16
Protective Gear 17
Required Equipment 17
GET FAMILIAR WITH THE SNOWMOBILE **19**
Track Propulsion System 19
Steering 19
Tether Cord 20
Braking 20
Parking Brake 20
Carrying Loads 20
Towing Loads 21
Towing Another Snowmobile 22
Accessories and Modifications 22
Traction Enhancing Products 23
RIDE SAFELY **25**
Rider Position (Forward Operation) 25
Rider Position (Reverse Operation) 27
Riding with Passenger(s) 27
Riding Alone 28
Riding in a Group 28
Avoiding Collisions 31
Riding Behaviors 31
Speeding 32
Moving Parts 32
Know Terrain and Riding Variations 33
Respect of the Wildlife 37
Carbon Monoxide (CO) Poisoning 37
Gasoline Fires and Other Hazards 37
Burns from Hot Parts 38
PRACTICE EXERCISES **39**
Where to Practice Exercises 39
Exercises to Practice 39

FUELING **42**
Fueling Procedure 42
INJECTION OIL **43**
TRANSPORTING THE VEHICLE **44**
IMPORTANT ON-PRODUCT LABELS (CANADA/UNITED STATES) **45**
Vehicle Safety Labels 45
Technical Information Labels 59
Hang Tag(s) 67
IMPORTANT ON-PRODUCT LABELS (ALL COUNTRIES EXCEPT CANADA/UNITED STATES) **71**
Vehicle Safety Labels 71
Technical Information Labels 85
PRE-RIDE INSPECTION **93**
Before Starting the Engine 93
After Engine is Started 93
Pre-Ride Check List 94
REPORTING SAFETY DEFECTS **96**

VEHICLE INFORMATION

PRIMARY CONTROLS **98**
Handlebar 98
Throttle Lever 98
Emergency Engine Stop Switch 99
Brake Lever 101
Parking Brake Lever 107
Engine Cut-off Switch 108
SECONDARY CONTROLS **111**
Console Switches 111
SHOT/ Electric Start/ Electronic Reverse (RER) Button 114
Rewind Starter Handle 115
GAUGE – 4.5” DIGITAL DISPLAY **116**
Multifunction Display 116
Warning Lamps and Indicators 118
Settings 119
GAUGE – 10.25” COLOR TOUCHSCREEN DISPLAY **121**
Default Display 121
Navigating the Digital Display 121
Center Display 122
Narrow View Display 122
Applet Menu 124
Warning Lamps and Indicators 131
Pairing your Smartphone Via Bluetooth 133
BRP GO! App 134
Quick Tour of the BRP GO! App 135
Messages in Multifunction Gauge 136

EQUIPMENT **137**
Operator's Guide 137
Heated Cell Case (if equipped) 137
Power Outlet - USB (if equipped) 137
Tools 138
Drive Belt Guard 141
Mountain Strap 141
Adjustable Stopper Strap (If Equipped) 142
Ice Scratchers 142
Spare Drive Belt Holder 142
BODY AND SEAT **146**
Front and Rear Bumpers 146
Front Storage Compartment 147
Side Panels 148
Upper Body Module 154
Seat 158
FUEL **160**
Fuel Requirements 160
Fueling Procedure 161
INJECTION OIL **163**
Recommended Injection Oil 163
Injection Oil Level Verification 163
BREAK-IN PERIOD **165**
Operation During Break-In 165
BASIC PROCEDURES **166**
Engine Starting Procedure 166
Emergency Starting 166
Vehicle Warm-Up 169
Reverse (RER) 170
Shutting Off the Engine 171
RIDING CONDITIONS AND YOUR SNOWMOBILE **172**
Altitude 172
Temperature 172
Hard Packed Snow 172
TUNE YOUR RIDE **174**
Front Suspension Adjustments 174
Rear Suspension Adjustments 179
Adjustment Tips According to Vehicle Behavior 192

MAINTENANCE

MAINTENANCE SCHEDULE **196**
EPA Regulation - Canadian and USA Vehicles 196
Deep Snow Usage 197
Maintenance Schedule 198
MAINTENANCE PROCEDURES **204**
Engine Coolant 204
Exhaust System 207

Spark Plugs 207
Brake Fluid 208
Chaincase Oil 212
Drive Chain 216
Drive Belt 217
Drive Pulley 223
Track 227
Suspension 235
Skis 237
Fuses 237
Headlights 238
Battery 240
VEHICLE CARE 244
Post-Operation Care 244
Vehicle Cleaning and Protection 244
STORAGE 245
Engine Storage Procedure 246
PRESEASON PREPARATION 250
MAINTENANCE RECORDS 251

TECHNICAL INFORMATION

VEHICLE IDENTIFICATION 260
Vehicle Description Decal 260
Identification Numbers 261
COMPLIANCE LABELS 263
EPA Compliance Label 263
SSCC Label 264
Regulation (EU) 2016/1628 applicable for Non-Road Mobile Machineries 264
NOISE EMISSION AND VIBRATION VALUES 266
EU DECLARATION OF CONFORMITY 267
UK DECLARATION OF CONFORMITY 268
EPA CERTIFIED ENGINES 269
Engine Emissions Information 269
BRP RF DESS POST GEN3 (CAN) 271
USA and Canada 271
Mexico 272
Brazil 272
Japan 273
Europe 273

REGULATORY INFORMATION – 10.25IN COLOR TOUCHSCREEN DISPLAY....278

TECHNICAL SPECIFICATIONS

ENGINE....284
600R E-TEC....284
850 E-TEC....285
850 E-TEC Turbo R....287
VEHICLE....290
Freeride....290
Summit....296

TROUBLESHOOTING

TROUBLESHOOTING GUIDELINES – E-TEC ENGINES....306
MONITORING SYSTEM....309
Pilot Lamps, Messages and Beeper Codes Pilot Lamps – 4.5” Digital Display....309
Pilot Lamps, Messages and Beeper Codes Pilot Lamps – 10.25” Digital Touchscreen....313
Fault Codes....319

WARRANTY

BRP LIMITED WARRANTY USA AND CANADA: 2025 SKI-DOO® SNOWMOBILES....322
US EPA EMISSION-RELATED WARRANTY....326
BRP INTERNATIONAL LIMITED WARRANTY: 2025 SKI-DOO® SNOWMOBILES....329
BRP LIMITED WARRANTY FOR THE EUROPEAN ECONOMIC AND THE COMMONWEALTH OF THE INDEPENDENT STATES (CIS) AREAS AND TURKEY: 2025 SKI-DOO® SNOWMOBILES....334

CUSTOMER INFORMATION

DATA PRIVACY INFORMATION....340
CONTACT US....342
Asia Pacific....342
Europe, Middle East and Africa....342
Latin America....343
North America....343
CHANGE OF ADDRESS/OWNERSHIP....344

This page is intentionally blank

GENERAL INFORMATION

GENERAL INFORMATION

Congratulations on your purchase of a new BRP snowmobile. Whatever model you have chosen, it is backed by the Bombardier Recreational Products Inc. (BRP) warranty and a network of authorized BRP snowmobile dealers ready to provide the parts, service or accessories you may require.

Your dealer is committed to your satisfaction. He has taken training to perform the initial set-up and inspection of your snowmobile as well as completed the final adjustment required to suit your specific weight and riding environment before you took possession.

At delivery, you were informed of the warranty coverage and signed the Pre-delivery Check List to ensure your new vehicle was prepared to your entire satisfaction.

Know Before you Go

To learn how to reduce the risk for you, your passenger or bystanders being injured or killed, read the following sections before you operate the vehicle:

– *Safety Information*
– *Vehicle Information*.

Also read all safety labels on your snowmobile and watch attentively the safety video located at:

Or, use the following QR code.

Safety Messages

This operator's guide utilizes the following symbols and words to emphasize particular information:

The safety alert symbol ⚠ indicates a potential injury hazard.

⚠ WARNING
Indicates a potential hazard which, if not avoided, could result in serious injury or death.

⚠ CAUTION

Indicates a hazard situation which, if not avoided, could result in minor or moderate injury.

NOTICE

Indicates an instruction which, if not followed, could severely damage vehicle components or other property.

About this Operator's Guide

This operator's guide has been prepared to acquaint the owner, operator and passenger with this snowmobile and its various controls, maintenance and safe riding instructions.

The following terminology in regards to operator, passenger and vehicle configuration is used as follows throughout this guide:

- **Operator**: refers to the person being behind the controls and driving the snowmobile.
- **Passenger**: refers to a person sitting behind the operator.
- **1-UP**: refers to a model designed for an operator only.
- **2-UP**: refers to a model designed to accommodate **one** passenger.

Keep this operator's guide in the vehicle as you can refer to it for the operation, instructing others, maintenance and troubleshooting.

Note that this guide is available in several languages. In the event of any discrepancy, the English version shall prevail.

If you want to view and/or print an extra copy of your operator's guide, simply visit the following website:

www.operatorsguides.brp.com

The information contained in this document is correct at the time of publication. BRP, however, maintains a policy of continuous improvement of its products without imposing upon itself any obligation to install them on products previously manufactured. Due to late changes, some differences between the manufactured product and the descriptions and/or specifications in this guide may occur. BRP reserves the right at any time to discontinue or change specifications, designs, features, models or equipment without incurring any obligation upon itself.

This operator's guide should remain with the vehicle when it's sold.

Respect of the Environment

The guidelines that we support are not designed to limit your snowmobiling fun, but to preserve the beautiful freedom that you can experience only on a snowmobile! These guidelines will keep snowmobilers healthy, happy and able to introduce others to what they know and enjoy about their favorite winter pastime. So, the next time you hit the trails on a cool, crisp and clear winter day, we ask you to remember that you are paving the way for the future of our sport. Help us lead it down the right path! From all of us at BRP, thank you for doing your share.

There is nothing more exhilarating than snowmobiling. Venturing onto snowmobile trails that cross wild areas is an exciting and healthy winter sport. However, as the number of people using these recreational parks increases, so does the potential for damage to the environment. Abuse of land, facilities and resources inevitably leads to restrictions and closures of both private and public land.

In essence, the greatest threat to our sport, is all around us. Which leaves us with one logical choice. When we snowmobile, we must always ride responsibly.

The vast majority respect the law and the environment. Each of us must set an example for those who are new to the sport, young and old alike.

It is in every one's best interest to tread lightly into our recreational areas. Because, in the long run, to protect the sport we must preserve the environment.

Become informed. Obtain maps, regulations and other information from the Forest Service or from other public land agencies. Learn the rules and follow them and that goes for speed limits, too!

Avoid running over young trees, shrubs, and grasses and don't cut wood. On flatlands or areas where trail riding is popular, it's important to ride only where authorized. Remember, there is a link between protecting your environment and your own safety.

Respect wildlife and be particularly sensitive of animals that are rearing young or suffering from food shortage. Stress can sap scarce energy reserves. Refrain from riding in areas where only animals are intended to tread!

Obey gate closures and regulatory signs and remember, light treaders don't litter!

Stay out of wilderness areas. They're closed to all vehicles. Know where the boundaries are.

Obtain permission to travel across private land. Respect the rights of landowners and other people's privacy. Remember, snowmobile technology has lowered the noise factor considerably, but you still shouldn't rev your engines where quiet “is the order of the day”.

Snowmobilers know all too well the efforts that have been made throughout the sport's history to enjoy access to areas where people can snowmobile safely and responsibly. This effort continues today, as strong as ever.

Respecting the areas where we ride... wherever they may be... is the only way to ensure their future enjoyment. That's one major reason why we know you'll agree that Light Treading is smart sledding! And there are more.

Enjoying the opportunity to see winter and all its natural majestic wonders, is an experience cherished by snowmobilers. Light Treading will preserve this opportunity and will make it possible for us to expose others to the beauty of winter and the unique thrill of our sport! Light Treading will help our sport to grow!

Finally, Light Treading is the sign of a smart snowmobiler. You don't have to leave big tracks or careen through a virgin forest to show you can ride. So whether you're driving a high performance BRP snowmobile or any other make or model, show you know what you're doing. Show you know how to send snow flying and make tracks with a light touch!

BE A RESPONSIBLE RIDER

At BRP, we believe there’s an opportunity for everyone in the powersports and marine communities to come together and rethink how we approach safety, riding etiquette, and the environment. We believe that when we empower all riders to ride responsibly—to look out for each other and safeguard our trails and playgrounds—we inspire an industry to welcome newcomers, build a more caring community and generate positive experiences.

Whether you ride on trails, roads, water or snow, BRP is committed to driving positive change. That’s why we’re making the Responsible Rider program a key part of our Corporate Social Responsibility initiative through action, education and community empowerment.

To learn more about Responsible Rider, including tips and tricks on safety, riding etiquette and the environment, visit **ski-doo. com/responsible-rider**. Or, use the following QR code.

It's time to take action! Join BRP, our fellow ISMA members and the entire snowmobiling community - including BRP President and CEO José Boisjoli - in taking the pledge to preserve access to our favorite winter playgrounds and snowmobile trails. You can sign the pledge at **snowmobilerspledge.org**

SAFETY INFORMATION

BEFORE YOU GO

⚠ WARNING

Disregarding any of the safety precautions and instructions contained in this section could cause injury including the possibility of death.

Operating Age and Ability

Operators must be qualified. Make sure the operator is 16 or older. Your state (or province) may have additional requirements. Laws regarding the minimum age and licensing requirements vary from one jurisdiction to another. Be sure to contact the local authorities for information regarding the legal operation of a snowmobile in the intended jurisdiction of use. BRP highly recommends that you take a safety riding course. Basic training is required for the safe operation of any snowmobile.

Operation of this snowmobile with a disability that impairs vision, reaction time, judgment, or operation of the controls is not recommended. The safe use of your snowmobile depends on many conditions such as visibility, speed, weather, environment, traffic, vehicle condition and the condition of the operator. The performance of some snowmobiles may significantly exceed that of other snowmobiles you have operated. Therefore, use by novice or inexperienced operators is not recommended.

Each passenger must be able to simultaneously place both feet firmly flat against each footboard when properly seated.

Drugs and Alcohol

Never ride after consuming alcohol or drugs. Riding on a snowmobile requires the operator and passenger (s) to be sober, attentive and alert. The use of drugs and alcohol, singly or in combination, decreases reaction time, impedes judgment, impairs vision, and inhibits your ability to safely ride on a snowmobile.

Avalanche Safety Training Courses

We recommend that all mountain riders take a local avalanche safety training course to become more familiar with snow conditions and learn how to properly use their equipment. Here are some web sites that can help you finding important information:

– – US: www.avalanche.org
– – Europe: www.avalanches.org
– – Canada: www.avalanche.ca

Protective Gear

Proper snowmobile clothing should be worn by all riders. It should be comfortable and not too tight. Always check the weather forecast before going on a ride. Dress for the coldest weather expected. Thermal underwear next to the skin also provides a good insulation.

Always wear an approved helmet at all times for safety and comfort. They provide both warmth and reduce injury. A stocking type cap, balaclava and face mask should always be carried or worn. Goggles or a face shield that attach to the helmet are indispensable.

Hands should be protected by a pair of snowmobile gloves or mitts which have sufficient insulation and allow use of thumbs and fingers for operation of controls.

Rubber bottom boots with either a nylon or a leather top, with removable felt liners are best suited for snowmobiling.

You should keep yourself as dry as possible when snowmobiling. When you come indoors, take your snowmobile suit and boots off and make certain they dry properly.

Do not wear a long scarf or loose apparels that could get caught in moving parts.

Carry colored lens goggles.

Required Equipment

As the owner of the snowmobile, you are responsible for ensuring that all required safety equipment is aboard. Check your local regulations about requirements.

First aid kit	Provided tool kit
Mobile phone	Knife
Spare spark plugs	Flashlight
Adhesive tape (duct tape)	Trail map
Spare drive belt	Snack
Probe*	Shovel*

Avalanche beacon*	-
*When riding in an area with avalanche risk	

GET FAMILIAR WITH THE SNOWMOBILE

This vehicle may exceed the performance of other vehicles you may have ridden. Take time to familiarize yourself with your new vehicle.

Inexperienced riders may overlook risks and be surprised by vehicle's specific behavior and terrain conditions. Ride slowly. Excessive speed and reckless driving can kill.

Make sure you read and understand the content of this operator's guide to become completely familiar with the controls and operation of the snowmobile before embarking on your first trip or taking on a passenger(s). If you have not had the opportunity to do so, practice driving solo in a suitable traffic-free area to become accustomed to the feel and response of each control.

It is very important to inform any operator, regardless of his experience, of the handling characteristics of this snowmobile. The snowmobile configuration, such as ski stance, ski type, suspension type, track length, width and type vary from a model to another. The snowmobile handling is greatly influenced by these characteristics.

Track Propulsion System

Your snowmobile features a track propulsion system. The track grips on the snow-covered surface and pushes the snowmobile in the opposite direction of the force applied on the surface. Stay away from the track. Personal injury will result if contact is made with the revolving track.

⚠ WARNING

Never stand behind or near a rotating track. Debris could be projected causing severe injuries.

The grip of the track will vary depending on the surface conditions. The grip may be reduced on hard-pack snow or ice. Reduce your speed and allow more space to turn. Refer to the *TRACTION ENHANCING PRODUCTS* subsection of this guide to learn how to balance the grip of the ski vs the grip of the track. If the front and rear of the snowmobile are out of balance due to an incorrect combination of traction enhancing products, the snowmobile may tend to oversteer or understeer, which could lead to a loss of control.

Steering

Skis are used to steer the snowmobile through the handlebar. The performance to steer will vary depending of the grip of the skis on the surface. Steering control ability may be reduced on hard-pack snow, ice or roads. Reduce speed and allow more space to turn. Refer to the *TRACTION ENHANCING PRODUCTS* subsection of this guide to learn how to balance the grip of the ski versus the grip of the track. If

the front and rear of the snowmobile are out of balance due to an incorrect combination of traction enhancing products, the snowmobile may tend to oversteer or understeer, which could lead to a loss of control.

Riding with a passenger or when carrying loads, the steering control will also be reduced. Reduce speed and allow more space to turn.

Tether Cord

Always attach tether cord eyelet to clothing before starting the engine to help ensure the engine stops should the operator fall off.

After riding, always remove the tether cord from the engine cut-off switch to avoid unauthorized use by children or others and to prevent starting in a closed environment (ex: garage).

Braking

Braking performances may vary suddenly under certain conditions. Always remember that the snowmobile braking distance may be affected when riding with a passenger and when loaded with cargo at the rear. Never jam the brake and lock the track. Be sure to use restraint in braking to keep from blocking the track in order to avoid surprises that could lead to a loss of control.

Using studs on the track will give you better braking capacity on packed snow or ice but will have no noticeable effect on soft snow. Refer to *Enhancing Traction Control Products* subsection for track studding application.

Parking Brake

Always engage parking brake before starting the engine. Parking brake should be used whenever snowmobile is parked.

Make sure parking brake is fully disengaged before operating the snowmobile. When you ride the vehicle, brake pads that are caused to drag by a continuous pressure on the lever may cause damage to the brake system and cause loss of braking capacity or fire.

Carrying Loads

Carrying loads affects the vehicle handling, stability and braking distance. Appropriate loading and weight distribution are therefore important.

When carrying loads it is very important to follow the recommendations:

- Never exceed the maximum cargo capacity. Refer to *Safety Information on the Vehicle* or *Technical Specifications* subsections for the applicable cargo load capacity of your snowmobile.
- Always adjust the suspensions according to the cargo load. Refer to *Tune Your Ride* subsection for more details.
- Never carry a load unless it is properly secured using a BRP LinQ certified accessory. Compatible accessories which are not BRP certified may not be considered as fit for this purpose.
- Always reduce your speed, turn gradually and allow longer braking distance when carrying loads.

⚠ WARNING

Failure to follow these recommendations when carrying or towing loads could lead to a loss of control and possibly in a tip over.

Towing Loads

Towing loads affects the vehicle handling, stability and braking distance. Appropriate loading and weight distribution are therefore important.

When towing a load it is very important to follow the recommendations:

- Always use a rigid tow bar to tow a cargo carrier or an accessory.
- Never tow a load using a rope. Using a rope would result in a collision between the load and the snowmobile and possibly in a tip over in case of a rapid deceleration or on a downward slope.
- Never tow a load by attaching it directly to the bumper. Use only the hitch to tow a load. Make sure that the cargo carrier hitch is compatible with the one on the vehicle. Use security chains or cables to secure the cargo carrier with the vehicle. Avoid excessive slack in the chains or cables, it could break and snap back.
- Never exceed the vehicle maximum tow capacity. Refer to *Safety Information on the Vehicle* or *Technical Specifications* subsections for the applicable towing capacity of your snowmobile.
- Never exceed the tongue weight capacity, if applicable.
- Always make sure load is evenly distributed and safely secured on the cargo carrier. Make sure there is at least some weight on the tongue, if applicable.
- Always adjust the suspensions according to the weight on the tongue, if applicable. Refer to *Tune Your Ride* subsection for more details.
- Reduce your speed and turn gradually. Avoid hills and rough terrain. Riding this vehicle with a cargo carrier substantially increases the risk of toppling, especially on inclined slopes. Never attempt steep hills.

– Allow more distance for braking, especially on inclined surfaces and when a passenger is on board. Be careful not to skid or slide.
– Use caution when disconnecting a loaded cargo carrier; its load may topple on you or others.

⚠ WARNING

Failure to follow these recommendations when carrying or towing loads could lead to a loss of control and possibly in a tip over.

On vehicle equipped with a gearbox, always put the shift lever to L (low range) when towing a cargo carrier.

Any towed accessory should have reflectors on both sides and at the rear.

Check country transport regulations for brake light(s) requirements.

Towing Another Snowmobile

If a snowmobile is disabled and must be towed, in an emergency situation only, a rope can be used

– Remove the drive belt. Refer to *Maintenance Procedures* for more details.
– Attach the rope to the ski legs (spindles), **not** to the skis. If the ski legs are not accessible, attach the rope to the bumper.
– Have someone sit on the towed snowmobile to steer and activate the brake if needed.
– Tow at low speed with extra caution.

NOTICE

Always remove the drive belt of the snowmobile that is to be towed to prevent damage to its belt and drive system.

In some areas, it may be illegal to do so. Check with state or local authorities.

Accessories and Modifications

Any modifications or addition of accessories approved by BRP may affect the handling of your vehicle. It is important to take the time to get familiar with the vehicle once modifications are made to understand how to adapt your driving behavior accordingly.

Avoid installing equipment not specifically approved by BRP for the vehicle and avoid unauthorized modifications. These modifications

and equipment have not been tested by BRP and may create hazards. For example, they could:

- Create a loss of control and increase risk of crash
- Cause overheating or short circuits increasing the risk of fire or burn injuries
- Affect the protection features provided by the vehicle
- Affect the behavior of the trailer when the vehicle is transported
- Cause a risk of losing objects on the road when transported.

Your vehicle may also become illegal to ride.

Ask your authorized BRP dealer for suitable available accessories for your vehicle.

Traction Enhancing Products

Important
-DEEP SNOW SERIES snowmobiles are not meant to be used with any type of traction enhancing products such as, adjustable or more aggressive ski carbide runners and/or track studs. -BRP does not recommend the installation and use of such products on your DEEP SNOW SERIES snowmobile.

⚠ WARNING
Never stud a track that has not been approved for studs. Installing studs on an unapproved track could increase the risk of the track tearing or severing.

Although not recommended, the installation of more aggressive carbide ski runners still possible.

Using more aggressive than original carbide ski runners gives a better grip on packed snow and ice, but has no noticeable effect on soft snow. For this reason, driving a snowmobile equipped with aggressive carbide runners requires a certain adaptation period. If your snowmobile is equipped with aggressive carbide runners , be sure to take plenty of time to get used to the way it handles when turning. Refer to *Maneuverability*.

Maneuverability

Using traction enhancing products such as, more aggressive ski carbide runners and/or studs makes the snowmobile grip the ground better at both the front and at the rear. The use of carbide runners is therefore required to give the skis a better grip, so that the front and rear of the snowmobile are in balance. While off-the-shelf carbide ski

runners are adequate, they don't necessarily give you optimal control, since that depends on your personal preferences, your riding style, and how your suspension is adjusted.

⚠ WARNING

If the front and rear of the snowmobile are out of balance due to an incorrect combination of traction enhancing products, the snowmobile may tend to oversteer or understeer, which could lead to a loss of control.

Oversteering

In certain conditions, using more aggressive ski carbide runners without studs on the rear track could make the snowmobile prone to oversteering, see illustration.

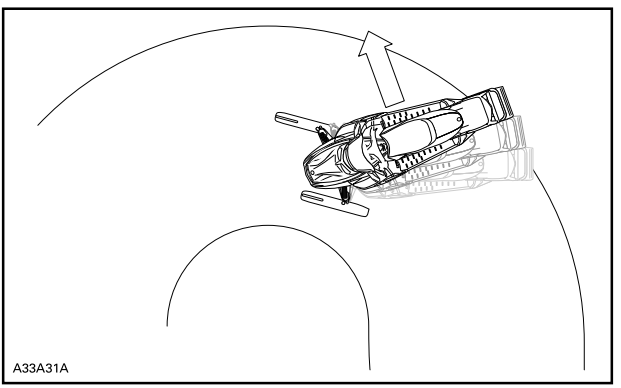

OVERSTEERING

Rider Position (Forward Operation)

Your riding position and balance are the two basic principles of making your snowmobile go where you want it to. When turning on the side of a hill, you and your passenger must be ready to shift body weight to help it turn in the desired direction. Operator and passenger must never attempt this maneuvering by placing feet outside of the vehicle. Experience will teach you how much lean to put into turns at different speeds and how much you will have to lean into a slope to maintain proper balance.

Generally, the riding position for best balance and control is sitting. However, the posting, kneeling or standing positions are also used under certain conditions.

⚠ WARNING

Do not attempt any maneuvers if they are beyond your abilities.

Sitting

Feet on the running boards, body midway back on seat is an ideal position when operating the snowmobile over familiar, smooth terrain. Knees and hips should remain flexible to absorb shocks.

Posting

A semi-sitting position with the body off the seat and the feet under the body in a sort of squatting posture, thus allowing the legs to absorb the shocks when traveling over uneven terrain. Avoid abrupt stops.

Kneeling

This position is achieved by placing one foot firmly on the running board and the opposite knee on the seat. Avoid abrupt stops.

Standing

Place both feet on the running boards. Knees should be flexed to absorb the shock from surface bumps. This is an effective position to see better and to shift weight as conditions dictate. Avoid abrupt stop.

Rider Position (Reverse Operation)

When operating in reverse:

– Ensure the path behind is clear of obstacles or bystanders before proceeding in reverse.
– BRP recommends sitting on your snowmobile when operating in reverse.
– Avoid standing up. Your weight could shift forward against throttle lever while operating in reverse, causing an unexpected acceleration. Unexpected acceleration when snowmobile operates in reverse can cause a loss of control.

Fast reverse while turning, could result in loss of stability and control.

Riding with Passenger(s)

This vehicle is designed for one (1) operator and as many passengers as there are seats with straps or handholds installed on the vehicle conforming to SSCC standards. Passenger must only sit on designated passenger seat.

⚠ WARNING

– **Never carry a passenger on a seat not approved by BRP.**
– **Never allow anyone to sit between the handlebar and the operator.**

Even when a passenger is allowed, this person must be physically fit for snowmobiling.

Any passenger must always be able to firmly lay his feet on the footrests and keep his hands on the handholds or seat strap when seated. Respecting those physical criteria is important to ensure that the passenger is stable and to reduce the risks of ejection. Falls can result in severe injury or death.

The operator has a responsibility to ensure the safety of his passenger and should inform the passenger about snowmobiling basics.

Before riding the vehicle, adjust suspension according to weight. Refer to *Tune Your Ride* subsection for more details.

Ask your passenger to inform you to slowdown or stop immediately if he feels uncomfortable or insecure during the ride.

When going over bumps, riders(s) may raise their body slightly off the seat to absorb the shocks with their legs.

An unforeseen bump can leave you passenger-less. Remind your passenger to lean into the turn with you, without causing the vehicle to topple. Be extremely careful, go more slowly and check the passenger frequently. Keep a watchful eye on your passenger while riding.

Braking ability and steering control are reduced when riding with a passenger. Decrease speed and allow extra space to maneuver.

Riding Alone

Venturing out alone with your snowmobile could also be hazardous. You could run out of fuel, have an accident, or damage your snowmobile. Remember, your snowmobile is capable of traveling further in half an hour than you may be able to walk in a day. Use the “buddy system”. Always ride with a friend or member of your snowmobile club. Even then, tell someone where you are going and the approximate time you plan to return.

Riding in a Group

Before starting out, designate a “trail boss” to lead the party and another person to follow-up at the end of the party. Ensure that all members of the party are aware of the proposed route and destination. When riding with others, limit your abilities to the experience of others. Never overtake the trail boss or, for that matter, any other snowmobile. Use down-the-line hand signals to indicate hazards or intent of direction change. It’s important to keep a safe distance between each snowmobile but each one behind the leader should know the position of the machine ahead.

Hand Signals

Every snowmobiler should relay any signal to the ones behind. Make sure this is legal where you are driving your snowmobile.

STOP Raise either hand straight above your head. 	**LEFT TURN** Extend your left hand straight out in the proper direction.
RIGHT TURN Extend the left arm and raise the hand to a vertical position so it forms a right angle at the elbow. 	**SLOWING DOWN** Left hand extended out and down from the side of the body with downward flapping motion of hand to signal warning or caution.

FOLLOWING SNOWMO BILES Arm raised, elbow bent with thumb pointing backward, in hitch-hicking motion move arm forward to backward over your shoulder.	**ONCOMING SNOWMO BILES** Left arm raised at shoulder height, elbow bent and forearm verticl, wrist bent, move arm from left to right over head pointing to right side of trail.
LAST SNOWMO BILE IN LINE Left arm raised at should height, elbow bent and forearm vertical with hand clenched in a fist.	

Light Signals

As an alternative to the hand signals, a light signal system can be installed on your snowmobile. Whether it is an OEM or after-sales system, it consists basically in a 2 colors LED light that signals you are followed by other riders, or you are the last rider. It allows the rider to keep both hands on the handlebar for more safety while crossing other riders.

Visit you BRP snowmobile dealer for more information.

MODE 1 : DEFAULT.	**WHITE** light
MODE 2 : CAUTION, RIDERS BEHIND ME.	**AMBER (LEFT SIDE ONLY)** light

MODE 3: BEWARE, I'M THE LAST SLED IN THE GROUP , OR ALONE.	**GREEN** light
MODE 4 : CAUTION, THERE'S A HAZARDOUS SITUATION, OR BEWARE, I'VE STOPPED.	**AMBER (BOTH SIDES FLASHING)** light
MOUNTED ON HANDLEBAR	MOUNTED ON HANDLEBAR

Avoiding Collisions

Wherever riding your vehicle always be on the look-out for the unexpected. Operate defensively. Scan constantly for people, objects, conditions and upcoming vehicles. In the trail, always stay on the appropriate side - as per country regulation - to avoid collision, especially when the field of vision is reduced. E.g.: Before a hilltop and a curve. Use extra caution whenever off-trail.

Always keep a safe distance from other snowmobiles and bystanders. Tailgating another snowmobile should be avoided. If the snowmobile in front of you slows for any reason, its operator and passenger could be harmed through your neglect. Maintain a safe stopping distance between you and the snowmobile in front of you. Depending on the terrain condition, stopping may require a little more space than you think. Play it safe. Be prepared to use evasive driving.

On land or water, fog or visibility-limiting snow can form. If you must proceed into the fog or heavy snow, do so slowly with your lights on and watch intently for hazards. If you are not sure of your way, do not proceed. Keep a safe distance behind other snowmobilers to improve visibility and reaction time.

Riding Behaviors

Injury or death may result to the snowmobile operator, passenger or bystander if the snowmobile is used in risky conditions which are

beyond the operator's, passenger's or snowmobile's capabilities or intended use.

Remember, promotional material may show risky maneuvers performed by professional riders under ideal and controlled conditions. You should never attempt any such risky maneuvers if they are beyond your level of riding ability.

Jumping can be a hazardous situation. It requires practice and should be done in a known and controlled environment. Never attempt jumping in a trail. A loss of control could lead to an impact with different elements like rock or tree, or with another snowmobile. When jumping be prepared for landing to absorb the shock. Brace yourself for the impact and your knees must be flexed to act as shock absorbers.

Also, an uneven or mined surface in the trail could be enough to kick upward the snowmobile and generate an impact or a loss of control. When “gunning” the throttle, the vehicle digs into and leaves an irregular snow surface for others. So protect the other users by not spinning the track in the middle of the trail.

Speeding

Excessive speed and reckless driving can be fatal. Always adjust your speed according to snow conditions and circumstances. In many cases, you cannot react or respond quickly enough to the unexpected. Always ride at a speed which is suitable to the trail, weather conditions and your own ability. Know your local rules. Speed limit may be in effect and meant to be observed.

Moving Parts

Stay away from the track. Personal injury will result if contact is made with the rotating track.

To prevent serious injury to individuals near the snowmobile:

- Never stand behind or near a moving track
- Always use a wide-base snowmobile stand with a rear deflector panel if it is necessary to rotate track
- When the track is raised off the ground, only run it at the lowest possible speed. Centrifugal force could cause debris, damaged or loose studs, pieces of torn track, or an entire severed track to be violently thrown backwards out of the tunnel with tremendous force
- Never operate the engine without the belt guard securely installed
- Never operate the vehicle without the brake disk guard securely installed
- Never operate the vehicle with the side panels opened, or the hood removed

Know Terrain and Riding Variations

Groomed Trail

On a maintained trail, sitting is the most preferred riding position. Do not race and, above all, keep to the right hand side of the trail. Be prepared for the unexpected. Observe all trail signs. Do not zigzag from one side of the trail to the other.

Ungroomed Trail

Unless there has been a fresh snowfall you can expect “washboard” and snowdrift conditions. Taken at excessive speeds, such conditions can be physically harmful. Slow down. Hold on the handlebar and assume a posting position. Feet should be under the body assuming a crouched position to absorb any jarring effect. On longer stretches of “washboard” trails, the kneeling position of one knee on the seat can be adopted. This provides a certain amount of comfort, while at the same time keeps the body loose and capable of vehicle control. Beware of hidden rocks or tree stumps partially hidden by a recent snowfall.

Deep Snow

In deep “powder” snow, your vehicle could begin to “bog” down. If this occurs, turn in as wide an arc as possible and look for a firmer base. If you do get “bogged”, and it happens to everyone, do not spin your track as this makes the vehicle sink deeper. Instead, turn the engine off, get off and move the back of the vehicle onto new snow. Then tramp a clear path ahead of the vehicle. A few feet will generally suffice. Restart the engine. Assume the standing position and rock the vehicle gently as you steadily and slowly apply the throttle. Depending on whether the front or rear end of the vehicle is sinking, your feet should be placed on the opposing end of the running boards. Never place foreign material beneath the track for support. Do not allow anyone to stand in front of, or to the rear of, the snowmobile with the engine running. Stay away from the track. Personal injury will result if contact is made with the revolving track.

Frozen Water

Traveling frozen lakes and rivers can be fatal. Avoid waterways. If you are in an unfamiliar area, ask the local authorities or residents about the ice condition, inlets, outlets, springs, fast moving currents or other hazards. Never attempt to operate your snowmobile on ice that may be too weak to support you and the vehicle. Operating a snowmobile on ice or icy surfaces can be very dangerous if you do not observe certain precautions. The very nature of ice is foreign to good control of a snowmobile or any vehicle. Traction for starting, turning or stopping is much less than that on snow. Thus, these distances can be multiplied manyfold. Steering is minimal, and uncontrolled spins are an ever

present danger. When operating on ice, drive slowly with caution. Allow yourself plenty of room for stopping and turning.

Slush

Slush should be avoided at all times. Always check for slush before starting across any lake or river. If dark spots appear in your tracks, get off the ice immediately. Ice and water can be thrown rearward into the path of a following snowmobile. Getting a vehicle out of a slush area is strenuous and in some cases, impossible.

Uphill

There are two types of hills you can encounter — the open hill on which there are few trees, cliffs or other obstacles, and a hill that can only be climbed directly. On an open hill, the approach is to climb it by side hilling or slaloming. Approach at an angle. Adopt a standing position with both feet on the same running board. Keep your weight on the uphill side at all times. Maintain a steady, safe speed. Continue as far as you can in this direction, then switch to an opposite hill angle and riding position.

A direct climb could present problems. Choose the standing position, accelerate before you start the climb and then reduce throttle pressure to prevent track slippage.

In either case, vehicle speed should be as fast as the incline demands. Always slow down as you reach the crest. If you cannot proceed further, don't spin your track. Apply the parking brake, turn the engine off, free the skis by pulling them out and downhill, place the rear of the snowmobile uphill, restart the engine, release the parking brake and ease it out with slow even throttle pressure. Position yourself to avoid tipping over, then descend.

Downhill

Downhill driving requires that you have full control of your vehicle at all times. On steeper hills, keep your center of gravity low and both hands on the handlebar. Maintain slight throttle pressure and allow the machine to run downhill with the engine operating. If a higher than safe speed is reached, slow down by braking but apply the brake with frequent light pressure. Never jam the brake and lock the track.

Side Hill

When crossing a side hill or traversing up or downhill, certain procedures must be followed. All riders should lean towards the slope as required for stability. The preferred operating positions are the standing position, with both feet on the running board that is facing uphill. Be prepared to shift your weight quickly as needed. Side hills and steep slopes are not recommended for a beginner or a novice snowmobiler.

Avalanche Hazard

When riding on mountainous terrain, you should be aware of the risk of avalanches. Avalanches vary in size and shapes and generally occur in steep terrain and on unstable snow.

New snow, animals, people, wind and snowmobiles can all trigger an avalanche. Avoid high marking or traversing steep terrain when avalanche conditions are possible. When in unstable snow conditions, travel should be restricted to lower angle slopes. Wind formed cornices should be avoided. Staying off unstable conditions is the key to safe mountain riding. Probably most important is to be aware of the conditions and dangers on a daily basis when in the mountains. Check local avalanche forecasts and threats each day before heading out to ride and heed forecasters advice.

You should always carry a snow shovel, probe and avalanche beacon while riding on mountains.

Bright Sunshine

Bright sunny days can considerably reduce your vision. The glare from sun and snow may blind you to the extent that you cannot easily distinguish ravines, ditches or other obstacles. Goggles with colored lenses should always be worn under these conditions.

Night Rides

The amount of natural and artificial light at a given time can affect your ability to see or to be seen. Be extra cautious. Drive at speeds that will allow you to stop in time when you see an unknown or dangerous object ahead. Stay on established trails and never operate in unfamiliar territory. Be sure both headlights and taillight are working and clean.

Unfamiliar Territory

Whenever you enter an area that is new to you, drive with extreme caution. There may be obstructions hidden beneath the snow. Go slow enough to recognize potential hazards such as fences or fence posts, brooks crossing your path, rocks, sudden dips, guy wires and countless other obstacles which could result in a termination of your snowmobile ride.

Driving off established trails and in the woods requires reduced speed and increased vigilance. Driving too fast in an area can make even minor obstacles very hazardous. Even hitting a small rock or stump could throw your snowmobile out of control and cause injury to its riders. Even when following existing tracks, be cautious. Travel at a speed so you can see what is around the next bend or over the top of the hill.

Hidden Wires

Always be on the lookout for hidden wires, especially in areas that may have been farmed at one time or another. Too many accidents have been caused by running into wires in the fields, guy wires next to poles and roads, and into chains and wires used as road closures. Slow speeds are a must.

Riding Uneven Surfaces

Unplanned jumps of snowdrifts, snowplow ridges, culverts, indistinguishable objects or sudden drop in the trail can be dangerous. You can avoid them by wearing the proper color lenses or face shields and by operating at a lower speed.

A good way to help seeing these terrain variations is to wear the proper color lenses or face shields and by operating at a lower speed. Crouch (stand) towards the rear of the vehicle and keep the skis up and straight ahead. Apply partial throttle and brace yourself for the impact. Knees must be flexed to act as shock absorbers.

Road Crossing

Your snowmobile is not designed to operate or turn on pavement of public streets, roads or highways. Avoid road traveling. If you must do so, and it is permitted, reduce speed and stay on the edge of the way where you can find snow to help providing capabilities to maintain directional control.

As snowmobile trails often cross roadways it is important for riders to know the proper crossing procedures. When approaching a roadway, signal to others that you are stopping at the intersection and slowly come to a complete stop back from the road's edge. In some cases, you will be approaching the road from a ditch or snowbank. Choose a place where you know you can climb without difficulty. Stop completely at the top of the bank and wait for all traffic to clear. Then, look carefully in both directions before crossing at a 90° angle. If needed, assume a standing position to look both ways. Be wary of parked vehicles. When you are certain that the road is clear proceed straight across the intersection without hesitation. Each rider needs to come to a complete stop, look both ways and then proceed when the roadways is clear of oncoming traffic.

Railroad Crossing

Never ride on railroad tracks. It is illegal. Railroad tracks and railroad rights-of-way are private property. A snowmobile is no match for a train. Before crossing a railroad track, stop, look and listen.

Respect of the Wildlife

Wildlife compliments your snowmobiling day. Snowmobile tracks provide firm ground over which animals can travel from area to area. Do not violate this privilege by chasing or harassing wildlife. Fatigue and exhaustion can lead to animal's death. Avoid areas posted for the protection or feeding of wildlife. If you happen to be fortunate enough to see an animal, stop your snowmobile and observe quietly.

Carbon Monoxide (CO) Poisoning

All engine exhaust contains carbon monoxide (CO), a deadly gas. Breathing carbon monoxide can cause headaches, dizziness, drowsiness, nausea, confusion and eventually death.

Carbon monoxide is a colorless, odorless, tasteless gas that may be present even if you do not see or smell any engine exhaust. Deadly levels of carbon monoxide can collect rapidly, and you can quickly be overcome and unable to save yourself. Also, deadly levels of carbon monoxide can linger for hours or days in enclosed or poorly ventilated areas.

If you experience any symptoms of carbon monoxide poisoning, leave the area immediately, get fresh air and seek medical treatment.

To prevent serious injury or death from carbon monoxide:

- Never run the vehicle in poorly ventilated or partially enclosed areas such as garages, carports or barns. Even if you try to ventilate engine exhaust with fans or open windows and doors, carbon monoxide can rapidly reach dangerous levels.
- Never run the vehicle outdoors where engine exhaust can be drawn into a building through openings such as windows and doors.
- Never stand next to the vehicle while the engine is running. A person standing next to the vehicle when the engine is running may inhale high concentrations of exhaust fumes.

After riding, always remove the tether cord from the engine cut-off switch to avoid unauthorized use by children or others and to prevent starting in a closed environment (ex: garage).

Gasoline Fires and Other Hazards

Gasoline is extremely flammable and highly explosive. Fuel vapors can spread and be ignited by a spark or flame many feet away from the engine. To reduce the risk of fire or explosion, follow these instructions:

- Use only an approved gasoline container to store fuel.
- Strictly adhere to instructions in *Vehicle Fueling Procedure*.

- Never start or operate the engine if the fuel cap is not properly installed.
- Use only a BRP approved LinQ fuel caddy to carry extra fuel on the vehicle. It should be properly installed and secured.

Gasoline is poisonous and can cause injury or death.

- Never siphon gasoline by mouth.
- If you swallow gasoline, get any in your eye or inhale gasoline vapor, visit your doctor immediately.
- If gasoline spills on you, wash with soap and water and change your clothes.

Burns from Hot Parts

Certain components may become hot during operation. Avoid contact during and shortly after operation to avoid burns.

PRACTICE EXERCISES

Practice alone the following exercises after having done the entire Pre-ride inspection. Always start and stop the engine according to the instructions in *ENGINE STARTING PROCEDURE* and *SHUTTING OFF THE ENGINE* in *BASIC PROCEDURES*. Don't forget to attach the tether cord to your jacket.

Where to Practice Exercises

Find a suitable area to practice the exercises. Ensure the area meet the following requirements:

– No traffic
– No obstacles
– Hard packed snow
– Ample space to maneuver.

Exercises to Practice

Practice alone the following exercises after having done the entire Pre-ride inspection. Always start and stop the engine according to the instructions in *ENGINE STARTING PROCEDURE* and *SHUTTING OFF THE ENGINE* in *BASIC PROCEDURES*. Don't forget to attach the tether cord to your jacket.

Using the Emergency Engine Stop Switch

Purpose: Become familiar with the operation of throttle lever and to become familiar with using the engine stop switch.

Directions:

– With the parking brake engaged, start the engine and let idle until it reaches the operation temperature.
– Use the engine stop switch to shut the engine off. Press the switch with your right thumb while keeping your hand on the handgrip.
– Restart the engine and repeat the exercise. No idle time is required.

Tips for additional practice:

– Press the emergency engine stop switch without looking at it.

Starting, Stopping and Basic Handling

Purpose:

– Learn throttle control and how to get the vehicle moving.
– Become familiar with low speed deceleration and braking.

If you feel like you are losing control while doing this exercise, release the throttle to stop accelerating and apply the brake as needed to slow down. You can also use the engine stop switch to cut power entirely.

Directions: At first, you will only use the throttle for a moment at a time, then release it and coast.

– Start the engine and release the parking brake lever.
– Slowly apply throttle until the vehicle starts to creep forward. As soon as you start moving release the throttle and coast, then press the brake lever to stop.
– Continue with this part of the exercise until you are comfortable with applying and releasing the throttle.

Engine Stop While in Motion

Purpose: Become familiar with using the emergency engine stop switch when in motion so you know how the vehicle will react if you need to use it later.

Directions:

– Partway down the straightaway, while operating at 8 km/h (5MPH), toggle the engine stop switch to OFF position and coast to a stop.
– Restart the engine and repeat the exercise. Try increasing your speed (to a maximum of 20 km/h (12MPH) before using the engine stop switch.

In an emergency, the snowmobile engine can be stopped by pressing down on the emergency engine stop switch or by pulling the tether cord cap from the engine cut-off switch, while applying brake.

Basic Turns

Purpose: Get comfortable turning in a controlled manner on both sides.

Directions:

– Roll in a straight line at low speed and make a wide arcing turn. Make sure there is enough space to perform the entire turn.
– Repeat right and left turns and maintain a steady speed bellow 8km/h (5MPH). Hold the throttle to maintain your low speed.
– Leaning forward and into the curve may help you to turn the handlebar more easily.

Quick Stops

Purpose:

– Become familiar with the vehicle braking ability.
– Learn to apply brakes with maximum efficiency.

This exercise is like what you did before, except you'll be applying the brake more firmly, working up to braking at the maximum without locking the track rotation. Always release the throttle completely for quick stops. If you apply throttle and brake at the same time, your stopping distance will be longer.

Directions:

- Start at one end of the straightaway and accelerate to 8 km/h (5MPH). Partway down the straightaway, release the throttle completely and brake quickly.
- Keep head and eyes up, keep handlebar straight, and do not release the brake until fully stopped.
- Repeat, increasing your speed and braking harder. When you feel that the rotation of the track will be stopped you need to release the pressure on the break lever. To maintain control, you need to keep the track in rotation.

Operating in Reverse

Purpose: Become familiar with the vehicle handling and turning radius in reverse.

Directions:

- Shift into reverse and remain seated. Refer to *SHIFTING IN REVERSE* in *BASIC PROCEDURES*.
- Check that the area behind you is clear. While looking backwards, slowly reverse and stop by releasing throttle and using the brake, just like when operating normally.
- Keep your speed low and do not back up for long distances.
- Repeat the reverse and stop in straight line until you get comfortable.
- Once you are comfortable with reversing in straight line, you can slowly reverse while turning the handle bar.

FUELING

Fuel is flammable and explosive under certain conditions.

– Never use an open flame to check fuel level.
– Never smoke or allow flame or spark in vicinity.
– Always proceed in a well-ventilated area.

Fueling Procedure

1. Stop engine and engage the parking brake.
2. Have operator and passenger get off the vehicle. Do not sit or lean on seat when fuel tank cap is not properly installed.
3. Unscrew slowly the fuel reservoir cap counterclockwise to stabilize pressure before removing it.

NOTE:
A short whistling sound is normal.

4. Insert the spout into the filler neck.
5. Pour fuel slowly so that air can escape from the tank and prevent fuel flow back. Be careful not to spill fuel.
6. Stop filling after the release of the gas pump nozzle handle and wait a moment before removing the spout. Do not retract the gas pump nozzle to put more fuel into the fuel tank. **Do not overfill.**
7. Reinstall the fuel cap and fully tighten clockwise.
8. Always wipe off any small fuel spillage from the vehicle. If a major spillage occurs, remove side panels to remove fuel vapors from engine compartment before starting.
9. Before getting on the way don’t forget to disengage the parking brake.
10. Never top up the fuel tank before placing the vehicle in a warm area. As temperature increases, fuel expands and may overflow.

INJECTION OIL

Injection Oil is flammable when heated.

- Never use an open flame to check oil level.
- Never smoke or allow flame or spark in vicinity.
- Always proceed in a well-ventilated area.

Refer to *Injection Oil* in *Vehicle Information* to add oil.

TRANSPORTING THE VEHICLE

Make sure that oil reservoir and fuel tank caps are properly installed.

Many type of trailer can be used to transport a vehicle. Tilt-bed, flatbed or enclosed trailers, no matter the trailer used, always proceed with precaution when driving the vehicle on and off of it.

Always anchor the vehicle securely, front and rear, even on short hauls. Use appropriate tie-down straps only. Make sure all equipment is securely fastened. Cover the vehicle to prevent road grime from causing damage.

Make sure the trailer meets state or provincial requirements. Ensure the hitch and safety chains are secured, and the brake, turn indicators and clearance lights are functional.

⚠ WARNING

Make sure all seats, accessories and cargo are properly secured, or remove it to prevent from falling on the road and creating a hazard for following vehicles.

⚠ WARNING

Do not tow the vehicle facing backwards. If the vehicle is towed facing backwards, the wind may cause damage to the windshield or even loss of the windshield.

IMPORTANT ON-PRODUCT LABELS (CANADA/UNITED STATES)

Vehicle Safety Labels

These labels are affixed to the vehicle for the safety of the operator, passenger or bystanders.

The following labels are on your vehicle and they should be considered permanent parts of the vehicle. If missing or damaged, the decals can be replaced free of charge. Visit an authorized BRP snowmobile dealer.

NOTE:
In the event of any discrepancy between this guide and the vehicle, the safety labels on the vehicle have precedence over the labels in this guide.

Shock Absorber - Warning Label

⚠ WARNING

- This shock absorber is pressurized.
- An explosion may occur if heated or punctured.
- Do not disassemble.

SHOCK ABSORBERS - WARNING LABEL

Disconnect Fuel Injectors - Warning Label

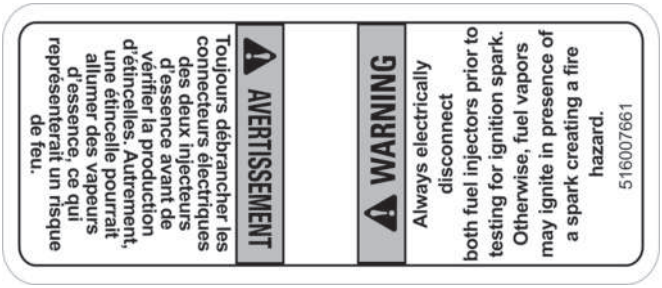

DISCONNECT FUEL INJECTORS - WARNING LABEL

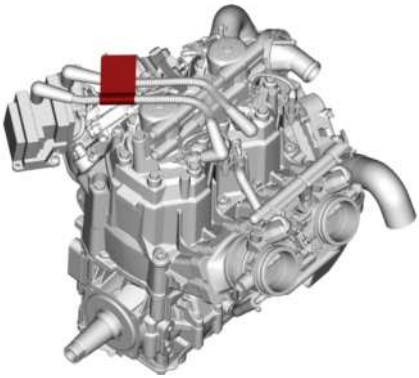

Pulley Guard - Warning Label

PULLEY GUARD – WARNING LABEL

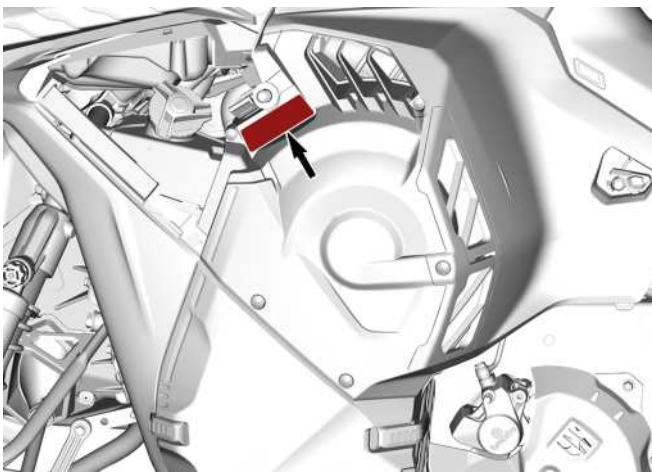

LABEL LOCATION

Do Not Open When Hot - Warning Label

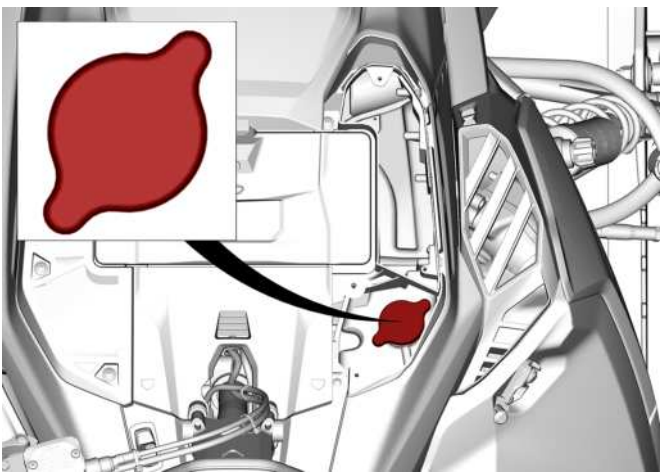

LABEL LOCATION

Do Not Open When Hot - Warning Label

DO NOT OPEN WHEN HOT – WARNING LABEL

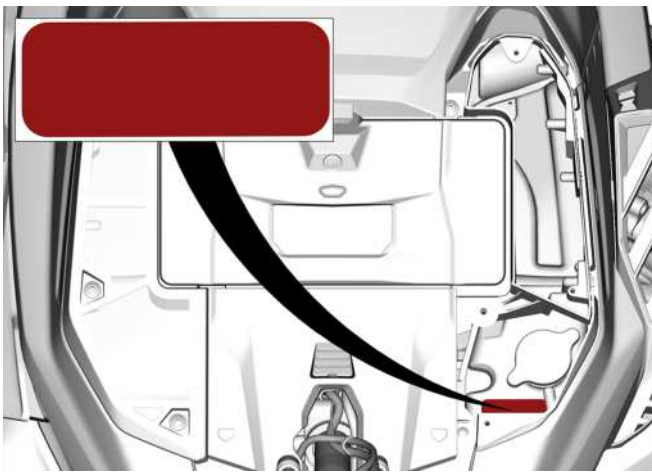

LABEL LOCATION

Beware of Hot Parts - Caution Label

⚠ CAUTION
Beware of hot parts.

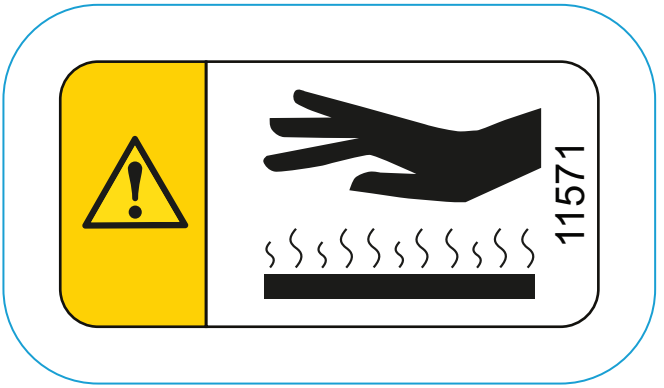

BEWARE OF HOT PARTS - CAUTION LABEL

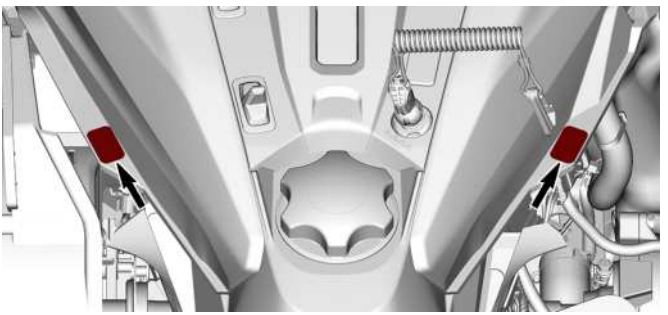

TYPICAL – LABEL LOCATION

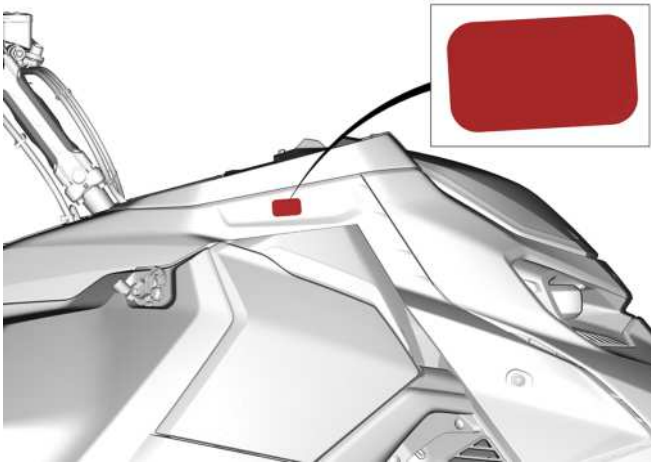

Disk Guard - Warning Label

DISK GUARD – WARNING LABEL

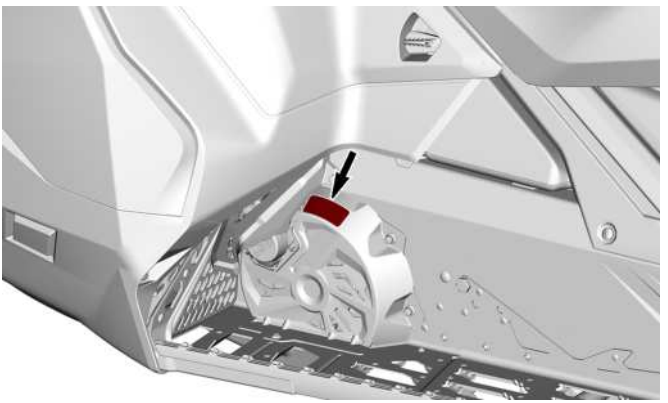

Starting Procedure - Warning Label

STARTING PROCEDURE - WARNING LABEL

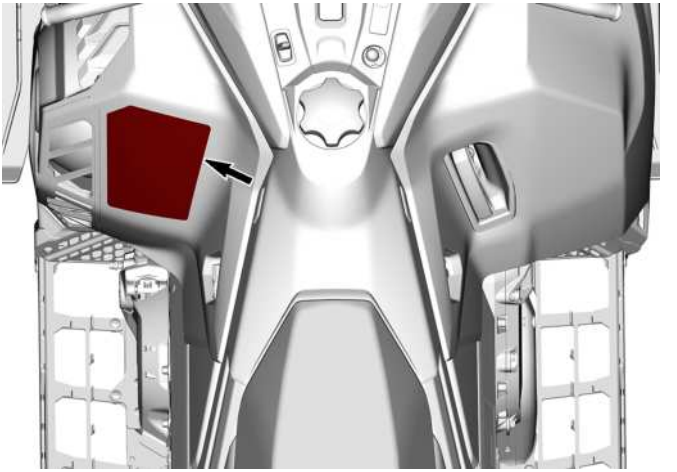

LABEL LOCATION

Passenger Safety - Warning Label

PASSENGER SAFETY - WARNING LABEL

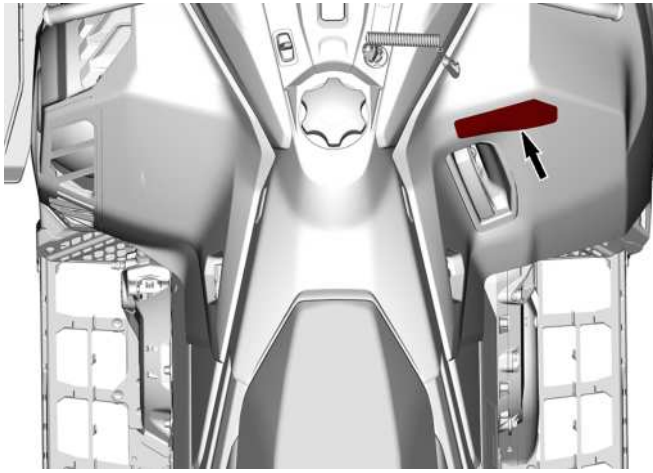

LABEL LOCATION

Maximum Cargo Load and Towing Capacity – Warning Label

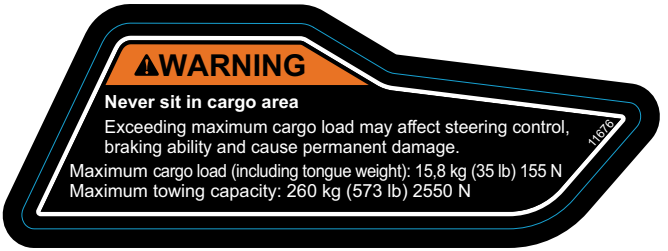

CARGO AREA – WARNING LABEL

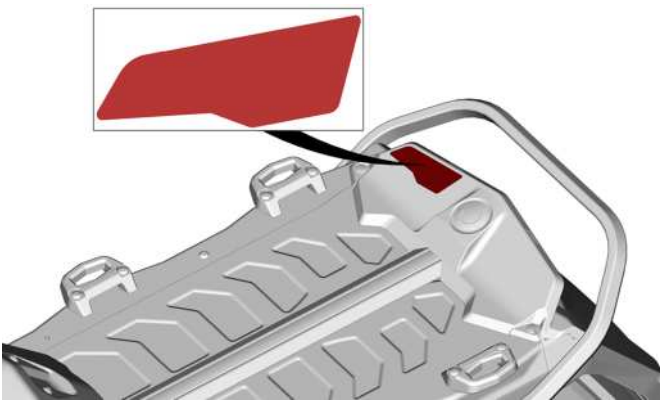

LABEL LOCATION

Rotating Track - Warning Label

ROTATING TRACK – WARNING LABEL

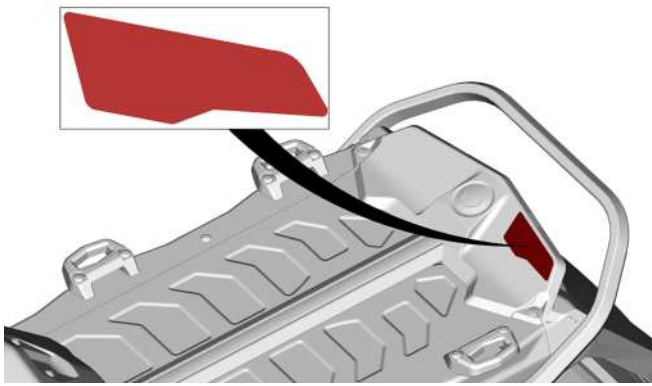

LABEL LOCATION

Deep Snow Riding - Caution Label

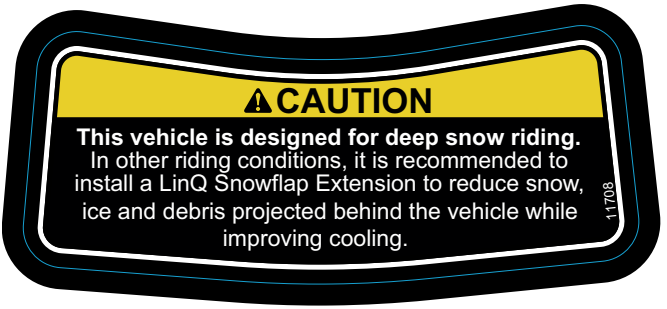

DEEP SNOW RIDING - CAUTION LABEL

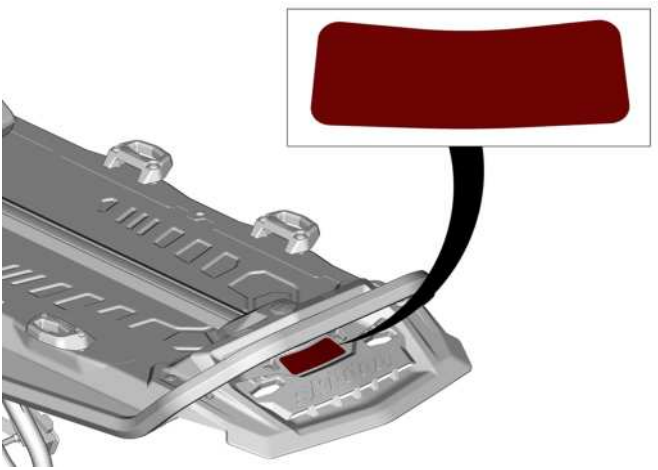

LABEL LOCATION

Technical Information Labels

Recommended Oil - Notice Label

Refer to the *Technical Specifications* for appropriate injection oil type for your vehicle engine.

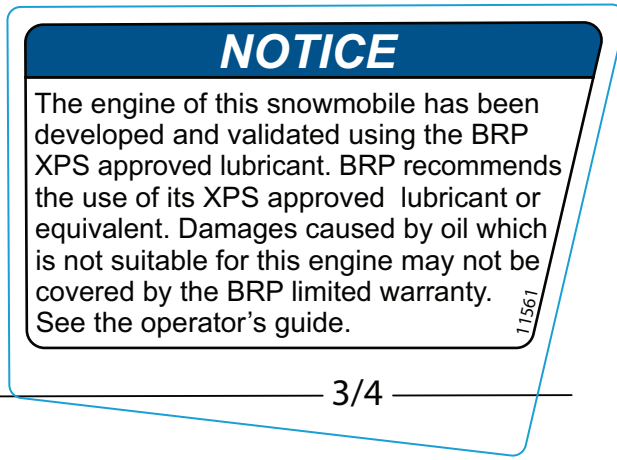

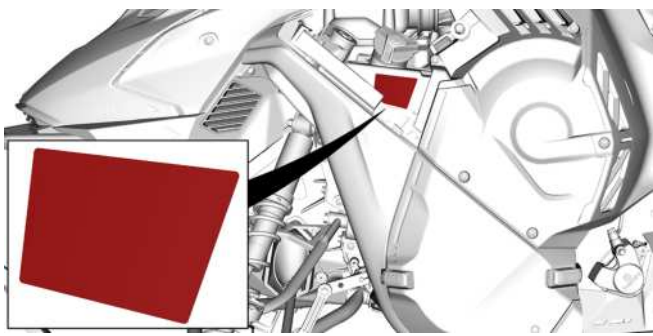

TYPICAL – LABEL LOCATION

Drive Pulley Tightening Torque - Notice Label

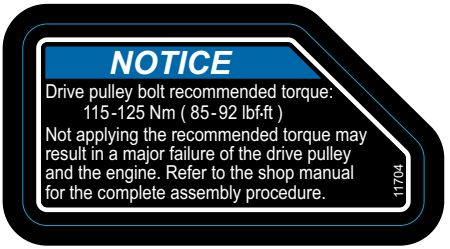

DRIVE PULLEY TIGHTENING TORQUE – NOTICE LABEL

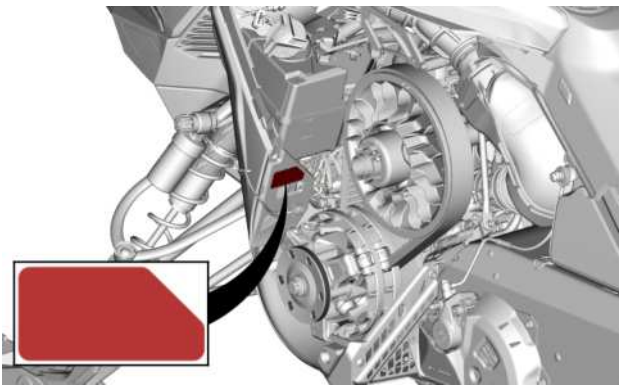

LABEL LOCATION

Clicker Adjustment - Notice Label

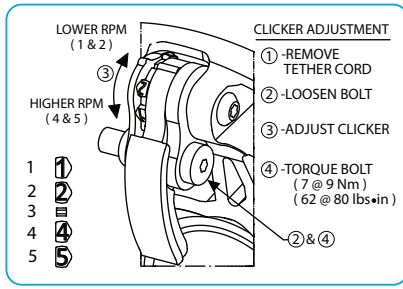

CLICKER ADJUSTMENT - NOTICE LABEL

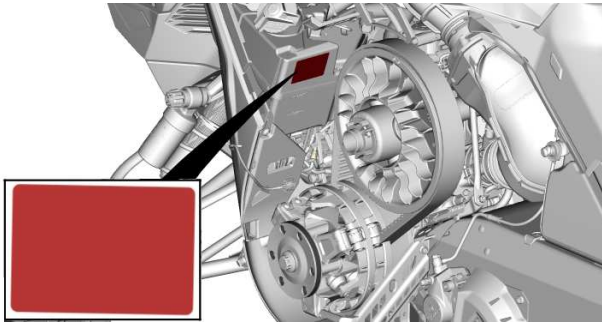

LABEL LOCATION

Tools - Notice Label

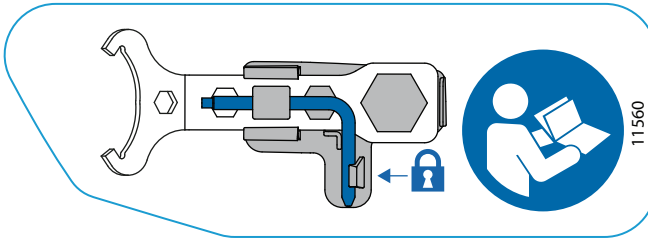

TOOLS - NOTICE LABEL

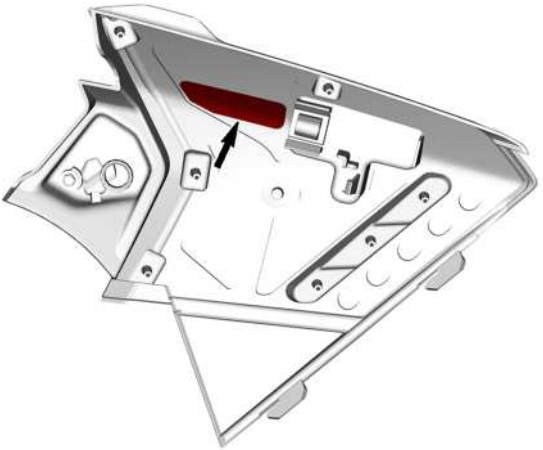

LABEL LOCATION – UPPER LH SIDE PANEL

Belt Guard Lock - Notice Label

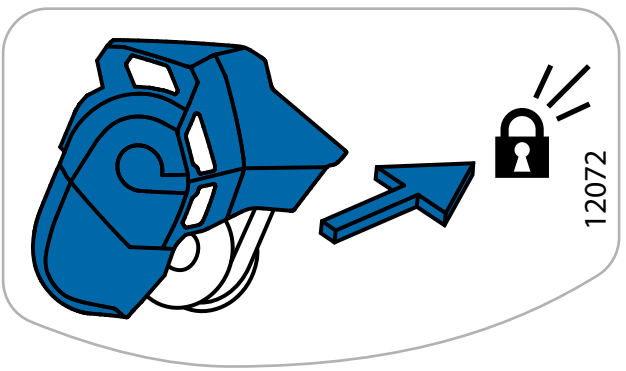

BELT GUARD LOCK - NOTICE LABEL

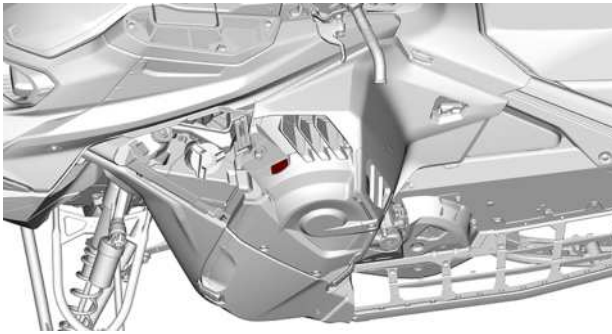

LH Side Panel Latch Label

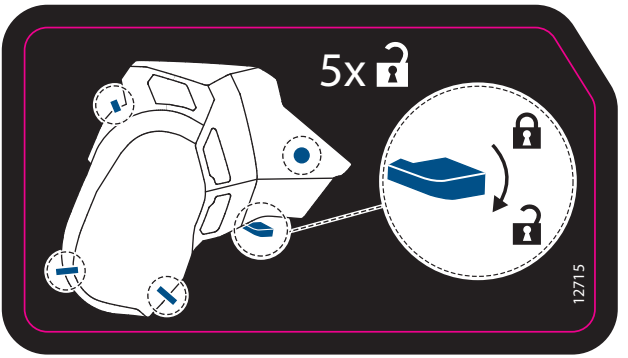

LH SIDE PANEL LATCH LABEL

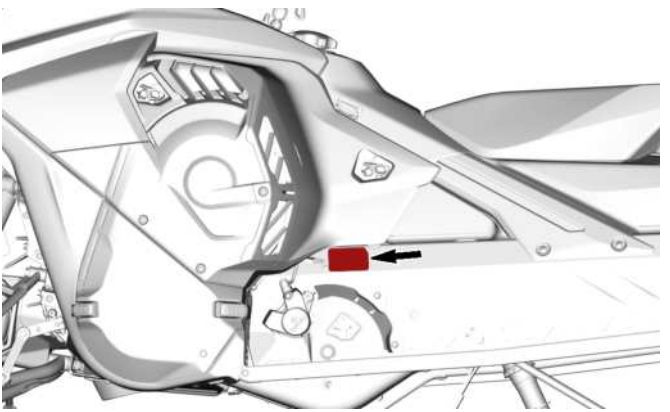

LABEL LOCATION

Factory Installed Chain and Sprockets - Notice Label

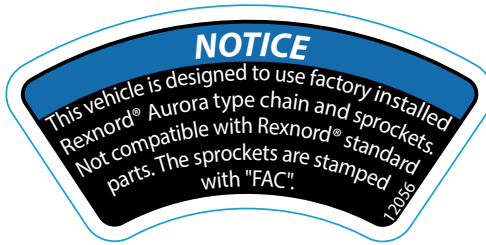

FACTORY INSTALLED CHAIN AND SPROCKETS – NOTICE LABEL

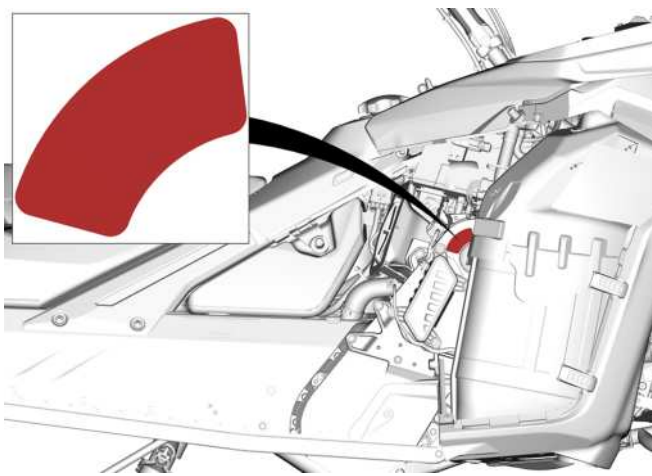

LABEL LOCATION

Recommended Fuel — Notice Label

Refer to the *Technical Specifications* for appropriate fuel type for your vehicle engine.

AKI (RON+MON)/2 OCTANE RATING - NOTICE LABEL

RON OCTANE RATING - NOTICE LABEL

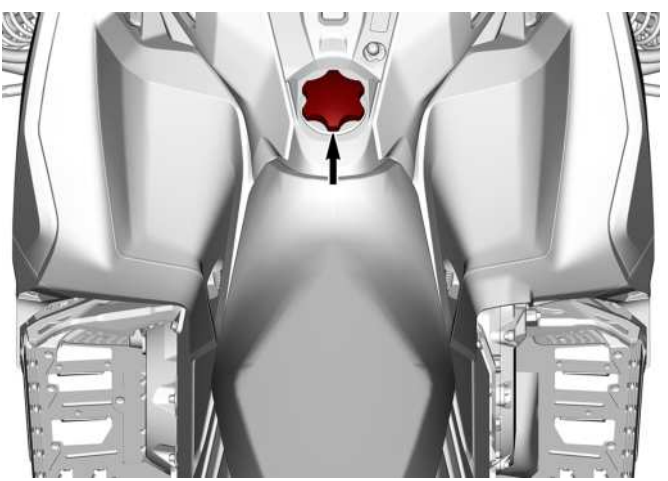

Hang Tag(s)

EPA Certified Hang Tag

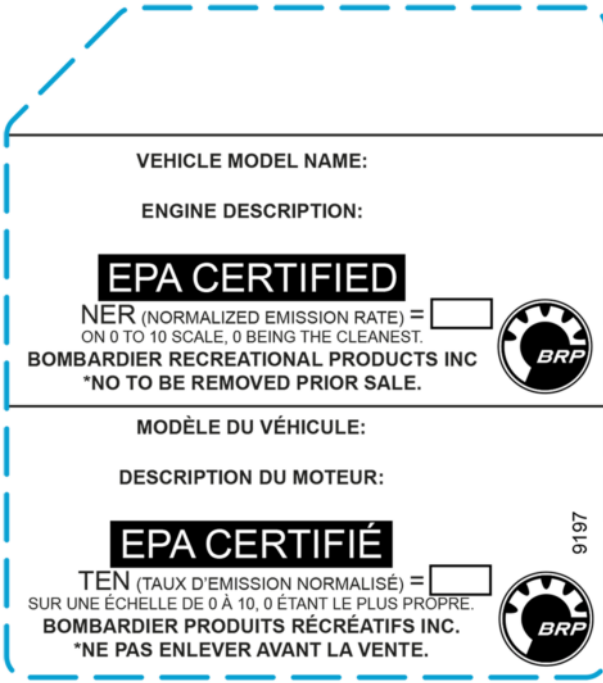

California Proposition 65 Warning

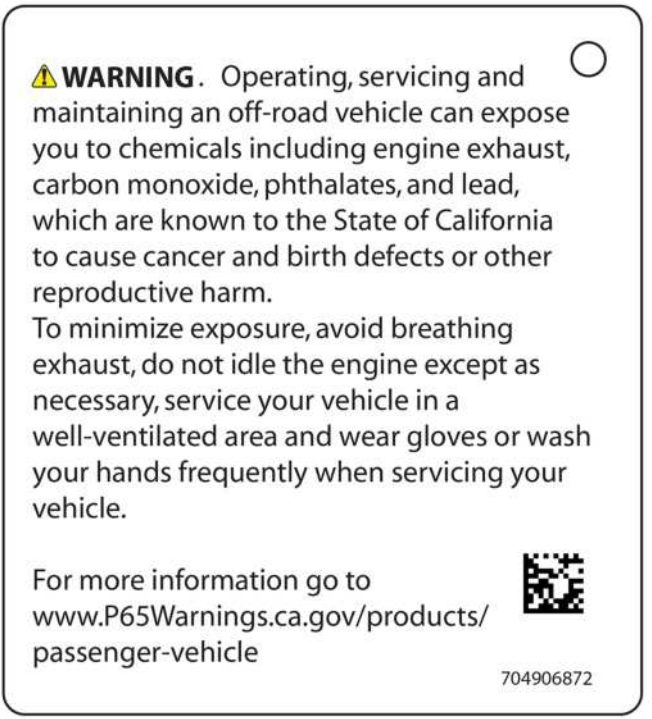

CALIFORNIA PROPOSITION 65 WARNING

Altitude Calibration Hang Tag

NOTICE

This snowmobile is calibrated for operating at altitudes between 2000 ft and 8000 ft. Operating above or below these altitudes requires calibration parts and adjustment. For more details, REFER to your Operator's Guide that came with your snowmobile or see your authorized Ski-Doo dealer. FAILURE TO RECALIBRATE MAY CAUSE SERIOUS ENGINE DAMAGE

AVIS

Cette motoneige est calibrée en fonction d'une utilisation en altitude situé entre 600 mètres et 2400 mètres. Si on utilise cette motoneige à moins de 600 mètres et au-delà de 2400 mètres il est nécessaire de la régler et d'installer certaines pièces de calibration. Pour plus de détails, se référer au Guide du conducteur ou consulter un concessionnaire autorisé de motoneiges Ski-Doo. SANS CE RÉGLAGE, LE MOTEUR PEUT-ÊTRE GRAVEMENT ENDOMMAGÉ

4597A

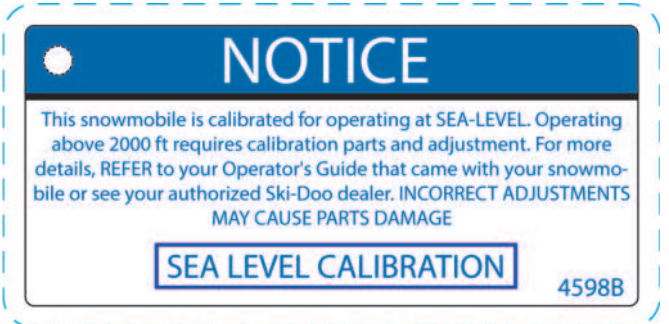
NOTICE
This snowmobile is calibrated for operating at SEA-LEVEL. Operating above 2000 ft requires calibration parts and adjustment. For more details, REFER to your Operator's Guide that came with your snowmobile or see your authorized Ski-Doo dealer. INCORRECT ADJUSTMENTS MAY CAUSE PARTS DAMAGE
SEA LEVEL CALIBRATION
4598B

AVIS
Cette motoneige est calibrée en fonction d'une utilisation au NIVEAU DE LA MER. Si on utilise cette motoneige au-delà de 600 mètres il est nécessaire de la recalibrer et d'installer certaines pièces. Pour plus de détails, se référer au Guide du conducteur ou consulter un concessionnaire autorisé de motoneiges Ski-Doo. SANS CETTE RECALIBRATION, CERTAINES PIÈCES PEUVENT ÊTRE ENDOMMAGÉES.
CALIBRATION NIVEAU DE LA MER.

IMPORTANT ON-PRODUCT LABELS (ALL COUNTRIES EXCEPT CANADA/UNITED STATES)

This vehicle comes with a hang tag and labels containing important safety information.

Any person who rides this vehicle should read and understand this information before riding.

Vehicle Safety Labels

These labels are affixed to the vehicle for the safety of the operator, passenger or bystanders.

The following labels are on your vehicle and they should be considered permanent parts of the vehicle. If missing or damaged, the decals can be replaced free of charge. Visit an authorized BRP snowmobile dealer.

NOTE:
In the event of any discrepancy between this guide and the vehicle, the safety labels on the vehicle have precedence over the labels in this guide.

Shock Absorber - Warning Label

⚠ WARNING

- This shock absorber is pressurized.
- An explosion may occur if heated or punctured.
- Do not disassemble.

SHOCK ABSORBERS - WARNING LABEL

Disconnect Fuel Injectors - Warning Label

⚠ WARNING

- **Always electronically disconnect both fuel injectors prior to testing for ignition spark.**
- **Otherwise fuel vapors may ignite in presence of a spark creating a fire hazard.**

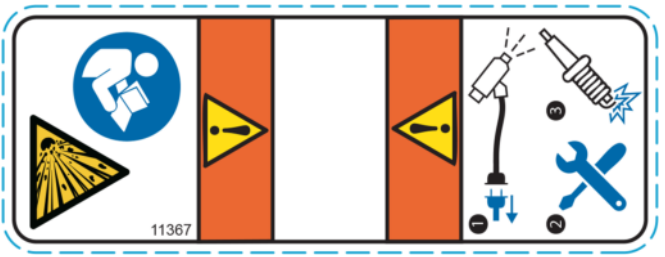

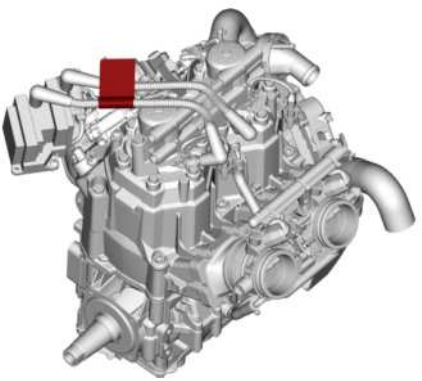

Pulley Guard - Warning Label

⚠ WARNING
This guard must ALWAYS be in place when engine is running. Beware of rotating parts, they could cause injuries or catch your clothing.

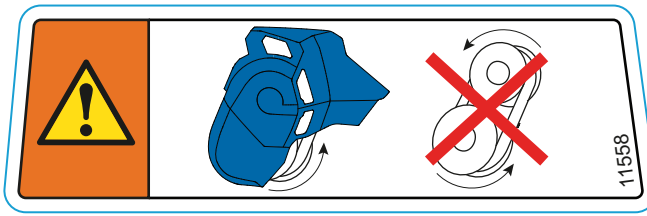

PULLEY GUARD – WARNING LABEL (PICTO)

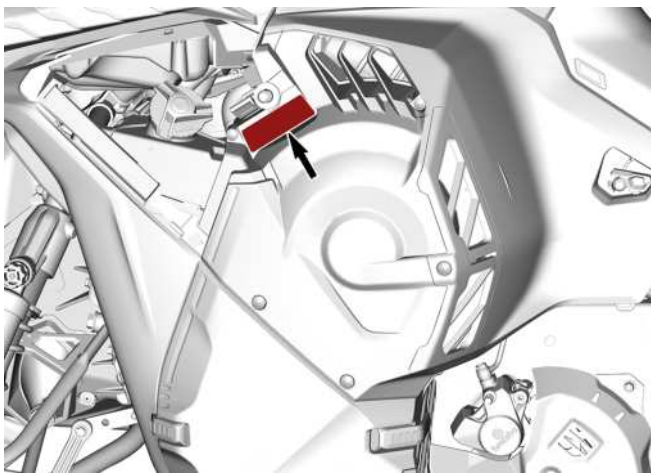

LABEL LOCATION

Do Not Open When Hot - Warning Label

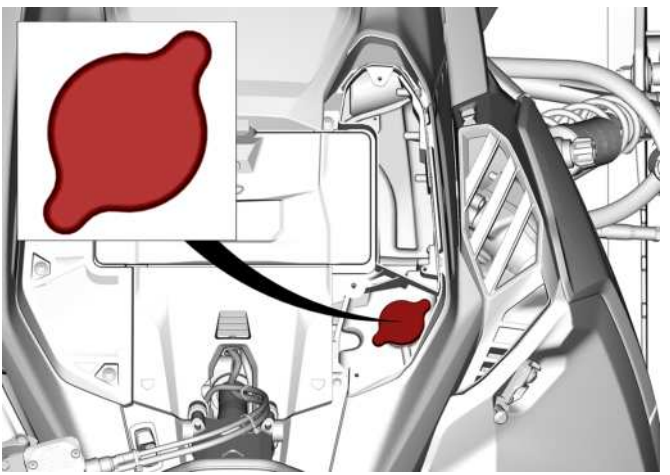

LABEL LOCATION

Do Not Open When Hot - Warning Label

⚠ WARNING
Do not open when hot.

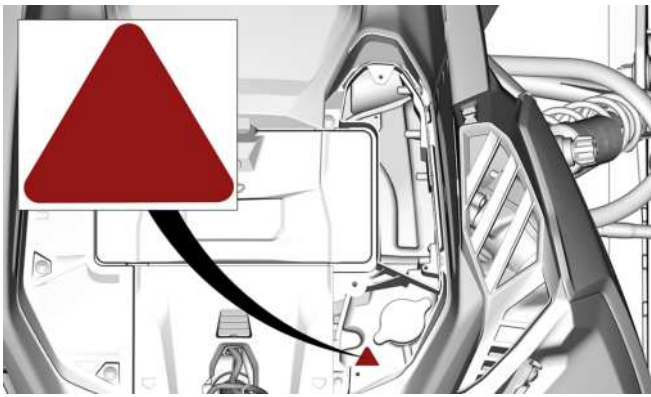

LABEL LOCATION – TURBO ENGINE

Beware of Hot Parts - Caution Label

⚠ CAUTION
Beware of hot parts.

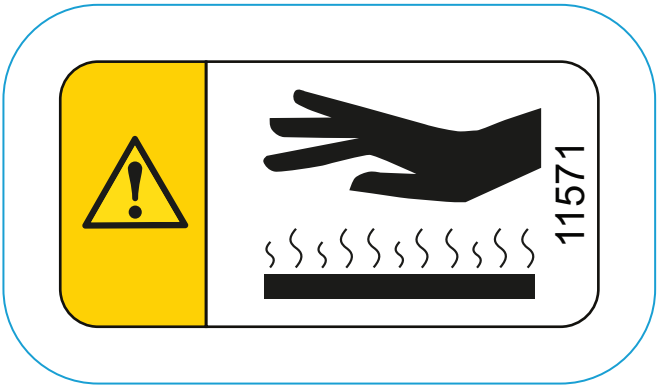

BEWARE OF HOT PARTS - CAUTION LABEL

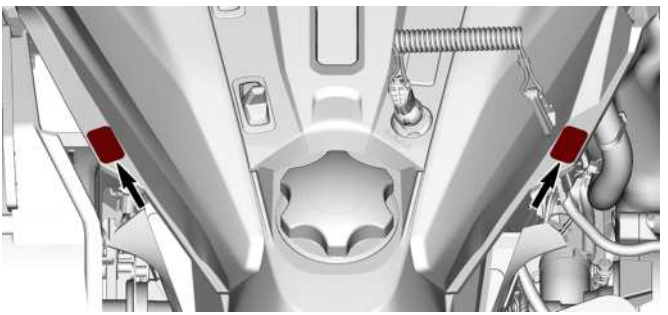

TYPICAL – LABEL LOCATION

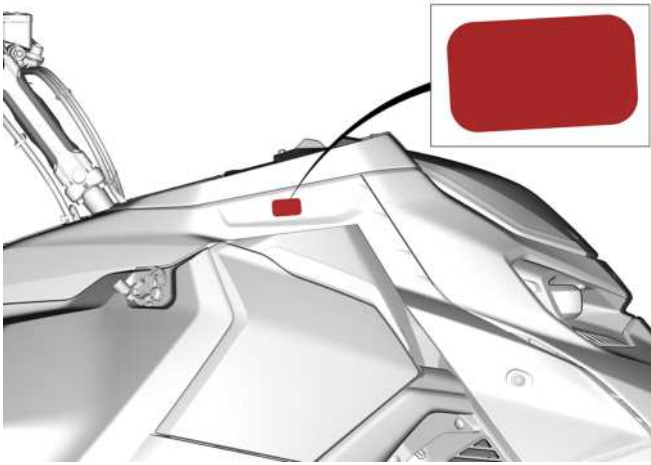

Disk Guard - Warning Label

⚠ WARNING
This guard must ALWAYS be in place except when servicing.

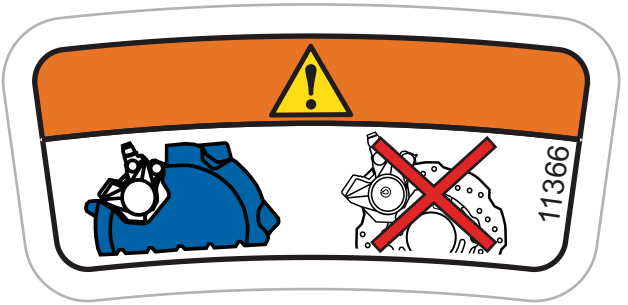

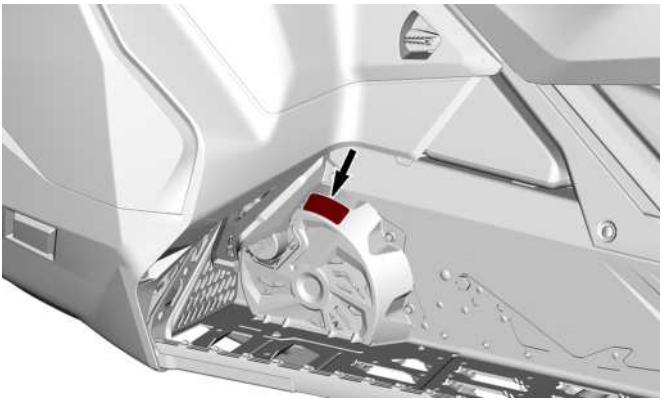

Starting Procedure - Warning Label

⚠ WARNING

- **Read and understand all safety labels, locate and read the operator's guide and watch the safety video (using the QR code link or visit Ski-Doo web site) before operation.**
- **Respect laws on minimum operator age. Manufacturer recommends a minimum operating age of 16 years old.**
- **ALWAYS wear ear protection.**
- **Get familiar with your vehicle. Inexperienced riders may overlook risks and be surprised by vehicle's specific behavior and terrain conditions. Ride slowly.**
- **Excessive speed and reckless driving can kill.**
- **ALWAYS adjust your speed according to snow conditions and circumstances.**
- **Steering control and braking ability may be reduced on hard-pack snow, ice or roads. Reduce speed & allow more space to stop or turn.**
- **Never open side panels or hood while engine is running or if vehicle is in motion. Ensure to remove tether cord from post before opening those.**

Before starting

1. **Attach tether cord to your clothing.**
2. **Turn handlebars all the way in both directions to check for interference and insure free operation.**
3. **Check proper operation of the throttle and brake levers each time before starting. They must return to their initial position when released.**
4. **Apply parking brake.**

After Starting:

1. **Push in the emergency engine stop switch to check if engine shuts off.**
2. **Re-start and pull-out tether cord to check if engine shuts off.**
3. **Re-start. Disengage parking brake before riding to avoid brake fading.**

STARTING PROCEDURE – WARNING LABEL

Passenger Safety - Warning Label

⚠ WARNING
This vehicle is designed for one (1) operator and as many passengers as there are seats with straps or handgrips installed on the vehicle conforming to SSCC standards.

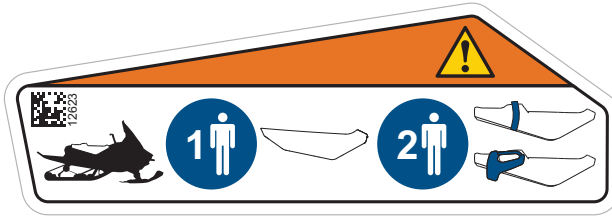

PASSENGER SAFETY - WARNING LABEL (PICTO)

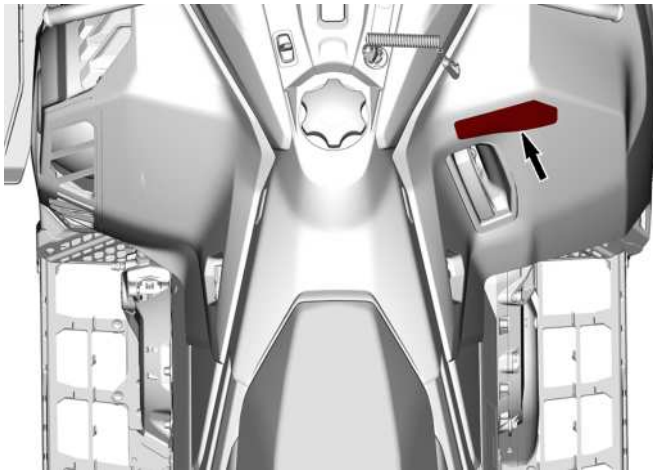

LABEL LOCATION

Maximum Cargo Load and Towing Capacity — Warning Label

⚠ WARNING

- **Never sit in the cargo area.**
- **Always use a securely fastened rigid tow bar to tow.**
- **Refer to the operator's guide for more details.**
- **Exceeding maximum cargo may affect steering control, braking ability and cause permanent damage.**
- **MAXIMUM cargo load (including tongue weight): 15.8 kg (155 N)**
- **MAXIMUM tongue weight: 10 kg (98 N)**
- **MAXIMUM towing capacity: 260 kg (2550 N)**

MAXIMUM CARGO LOAD AND TOWING CAPACITY — WARNING LABEL

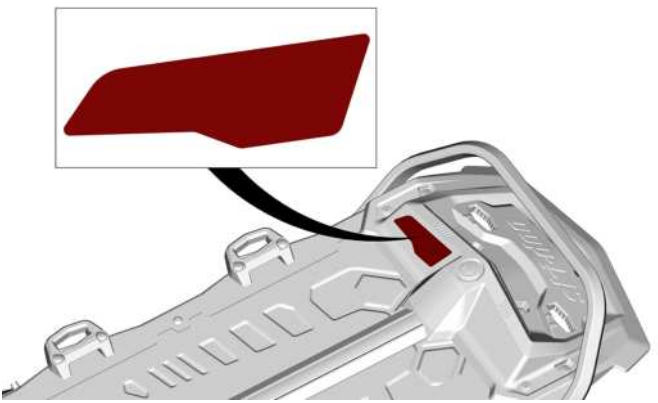

LABEL LOCATION

Rotating Track — Warning Label

⚠ WARNING
- NEVER stand behind or near a rotating track. Debris could be projected causing severe injuries. - To remove packed snow/ ice, remove tether cord from the vehicle, lift and hold vehicle on the side and use tools stored on the drive belt guard.

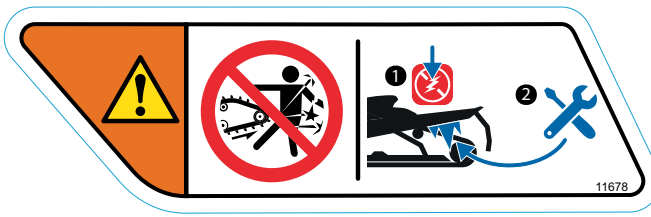

ROTATING TRACK — WARNING LABEL

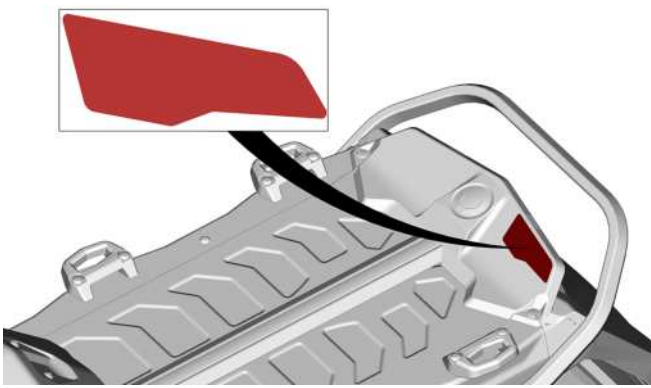

LABEL LOCATION

Deep Snow Riding - Caution Label

⚠ CAUTION
This vehicle is designed for deep snow riding. In other riding conditions, it is recommended to install a LinQ Snowflap Extension to reduce snow, ice and debris projected behind the vehicle while improving cooling.

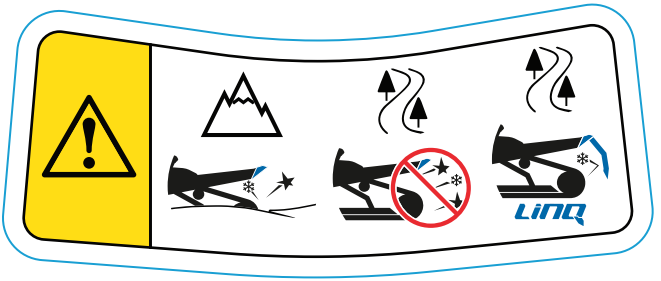

DEEP SNOW RIDING (PICTO) - CAUTION LABEL

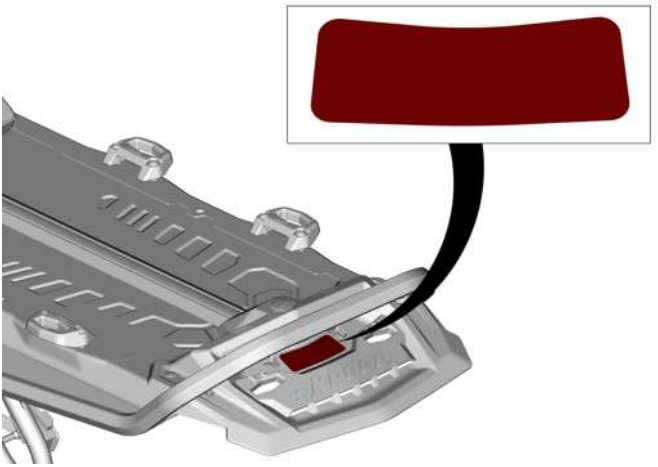

LABEL LOCATION

Technical Information Labels

Recommended Injection Oil - Notice Label

Refer to the *Technical Specifications* for appropriate injection oil type for your vehicle engine.

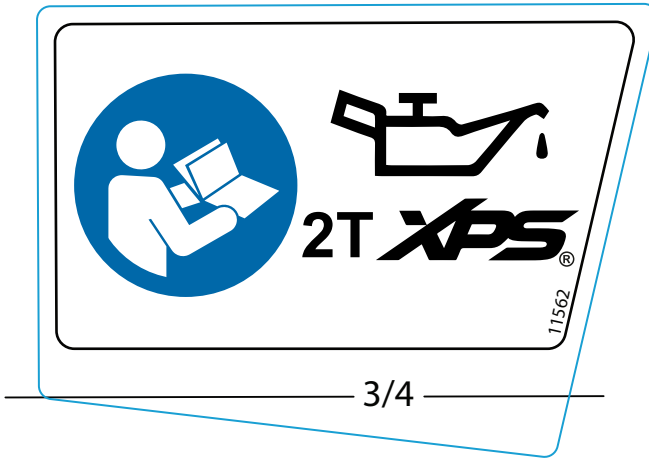

RECOMMENDED INJECTION OIL - NOTICE LABEL

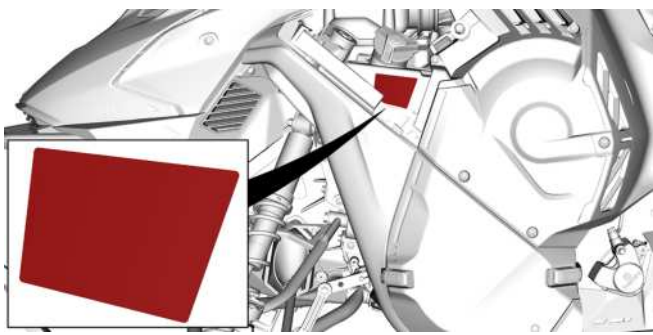

TYPICAL – LABEL LOCATION

Drive Pulley Tightening Torque - Notice Label

NOTICE
– **Drive pulley bolt recommended torque is 115 to 125 Nm (85 to 92 lbf-ft).** – **Not applying the recommended torque may result in a major failure of the drive pulley and the engine.** – **Refer to the service manual for the complete assembly procedure.**

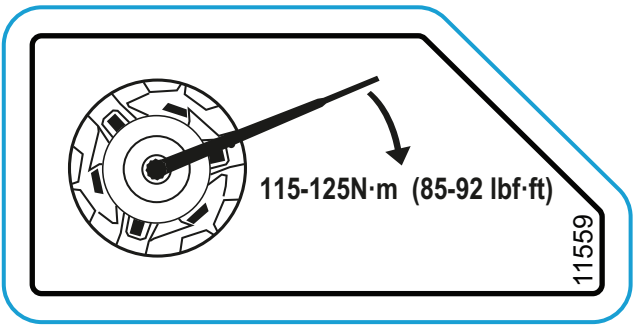

DRIVE PULLEY TIGHTENING TORQUE – NOTICE LABEL

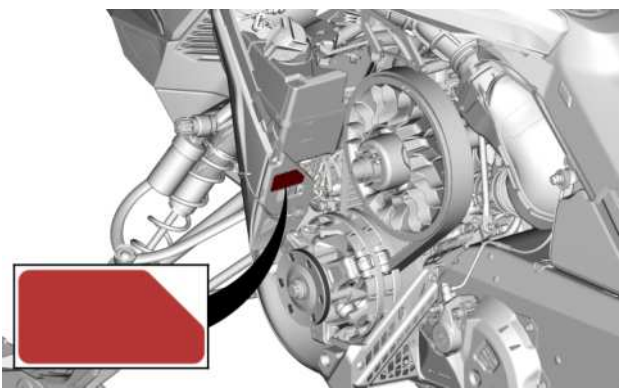

LABEL LOCATION

Clicker Adjustment - Notice Label

NOTICE

Refer to operator's guide.
Lower RPM : 1 & 2
Higher RPM : 4 & 5

1. **Remove tether cord.**
2. **Remove pulley expander from vehicle.**
3. **Loosen bolt.**
4. **Adjust clicker.**
5. **Tighten bolt to specification.**

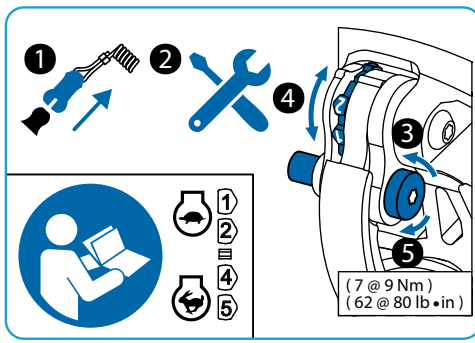

CLICKER ADJUSTMENT LABEL

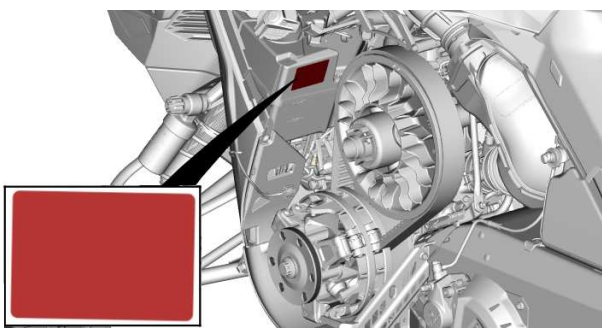

LABEL LOCATION

Tools - Notice Label

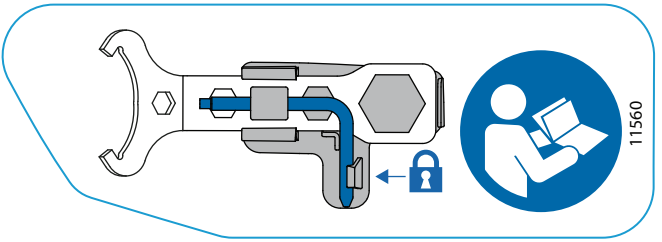

TOOLS - NOTICE LABEL

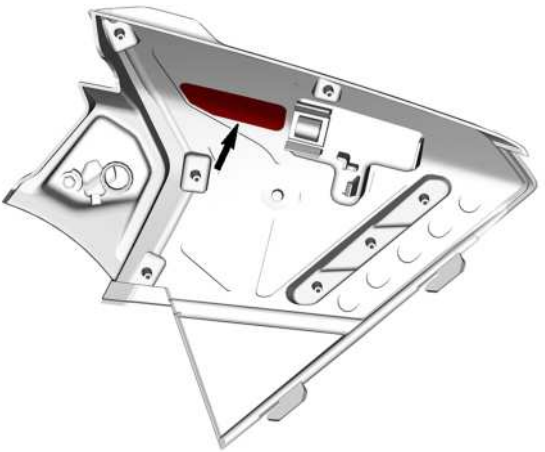

LABEL LOCATION – UPPER LH SIDE PANEL

Belt Guard Lock - Notice Label

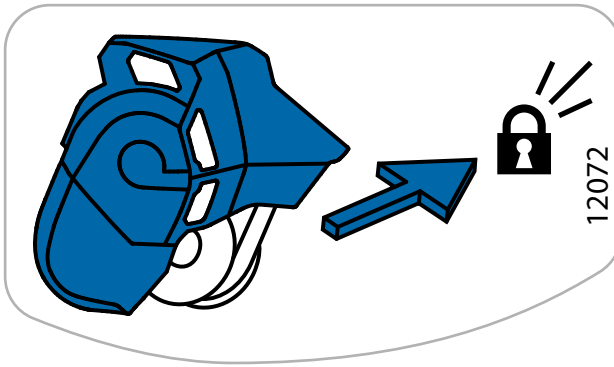

BELT GUARD LOCK - NOTICE LABEL

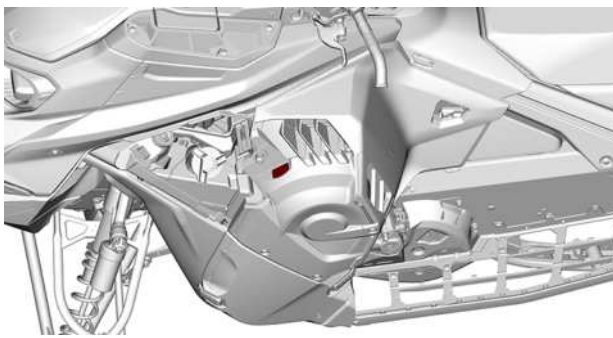

LH Side Panel Latch Label

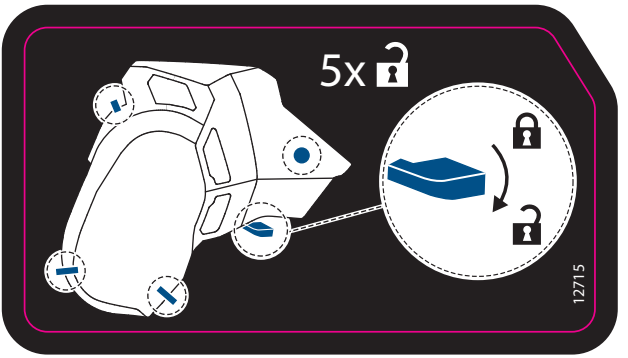

LH SIDE PANEL LATCH LABEL

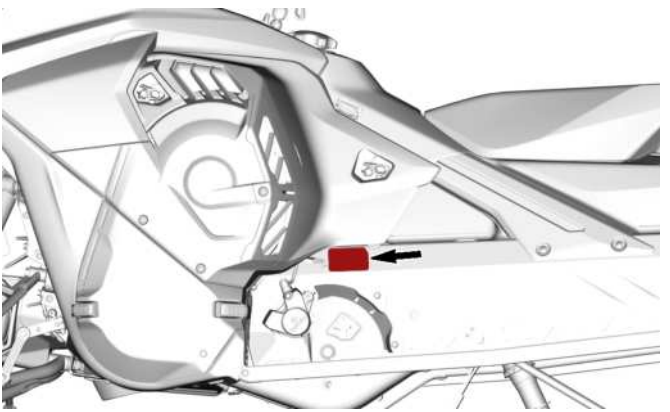

LABEL LOCATION

Factory Installed Chain and Sprockets - Notice Label - Turbo Engine

NOTICE

This vehicle is designed to use factory installed Rexnord® Aurora type chain and sprockets. Not compatible with Rexnord® standard parts. The sprockets are stamped with "FAC".

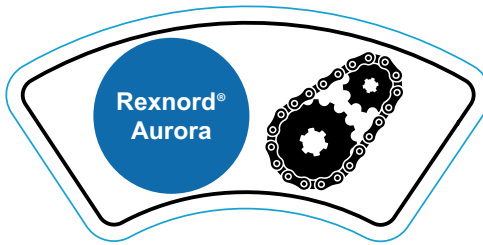

FACTORY INSTALLED CHAIN AND SPROCKETS – NOTICE LABEL

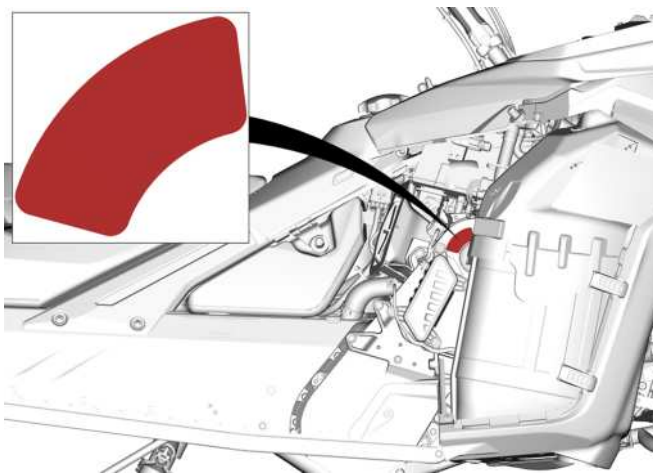

LABEL LOCATION

Recommended Fuel — Notice Label

Refer to the *Technical Specifications* for appropriate fuel type for your vehicle engine.

AKI (RON+MON)/2 OCTANE RATING - NOTICE LABEL

RON OCTANE RATING - NOTICE LABEL

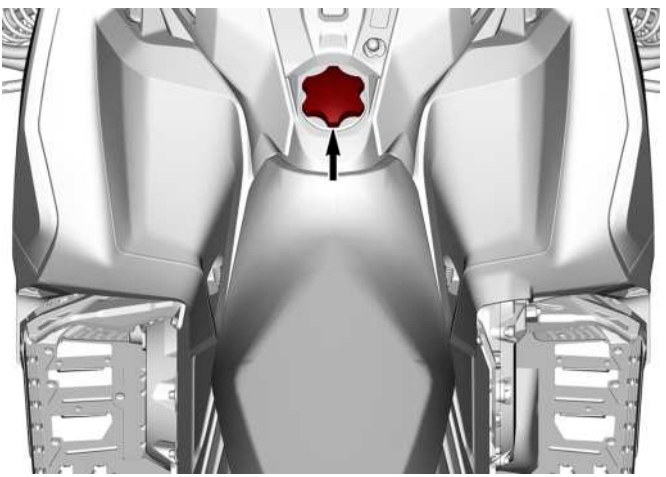

PRE-RIDE INSPECTION

Perform a pre-ride inspection before each ride to detect potential problems during operation. The pre-ride inspection can help you monitor wear and deterioration before they become a problem. Correct any problems that you discover to reduce the risk of an accident or a malfunction.

Before Starting the Engine

1. Remove snow and ice from body including lights, seat, footrests, controls and instruments.
2. Remove packed snow and ice from the rear suspension using the wrench tool stored on the drive belt guard.
3. Verify that air silencer prefilter is free of snow.
4. Verify that CVT outlet air filter is free from dust accumulation. Clean as required.
5. Verify that skis and steering operate freely. Check corresponding action of skis versus handlebar.
6. Check fuel and injection oil for levels and leaks. Replenish if necessary and in case of any leaks; you should seek service from an authorized BRP snowmobile dealer, repair shop, or person of your own choosing for maintenance, repair, or replacement.
7. All storage compartments must be properly latched and they must not contain any heavy or breakable objects. Hood and side panels must be also properly latched.
8. Activate the throttle control lever several times to check that it operates easily and smoothly. It must return to idle position when released.
9. Activate the brake lever and make sure the brake fully applies before the brake control lever touches the handlebar grip. It must fully return when released.
10. Apply parking brake and check if it operates properly. Leave parking brake applied.
11. Inspect drive belt condition and height. Refer to *drive belt* in *maintenance procedures*.

After Engine is Started

For proper engine starting procedure, refer to the appropriate *Engine Starting Procedure*.

1. Check headlights high beam and low beam, taillight, stop light and pilot lamps operation.

NOTE:
You may need to detach tether cord from your clothes to check lights. In such a case, attach cord as soon as you get back at the controls of the snowmobile.

2. Check the engine cut-off switch (by pulling tether cord cap) and emergency engine stop switch operation.

3. Release parking brake.
4. Refer to *Vehicle warm up* and follow instructions.

Pre-Ride Check List

ITEM	OPERATION	✓
BODY INCLUDING SEAT, FOOTRESTS, LIGHTS, AIR FILTER, CONTROLS AND INSTRUMENTS	Check condition and remove snow or ice.	
CVT OUTLET AIR FILTER	Check for ice and debris accumulation and clean as required	
SKIS AND STEERING ACTION	Check for free movement and proper operation.	
SKI RUNNERS	Check for abnormal wear.	
FUEL	Check for proper level and no leaks.	
INJECTION OIL	Check for proper level and no leaks.	
COOLANT	Check for proper level and no leaks.	
DRIVE BELT	Check for cracks, fraying or abnormal wear and proper height.	
THROTTLE LEVER	Check for proper operation.	
BRAKE LEVER	Check for proper operation.	
PARKING BRAKE, BRAKE	Check for proper operation.	
BRAKE FLUID	Check for proper level and no leaks.	
STORAGE COMPARTMENT	Check for proper latching and no heavy or breakable objects.	
TRACK	Check condition and remove snow or ice.	
SLIDER SHOES	Check for abnormal wear.	

EMERGENCY ENGINE STOP SWITCH AND ENGINE CUT-OFF SWITCH (TETHER CORD CAP)	Check for proper operation. Tether cord must be attached to operator clothing eyelet.	
LIGHTS	Check for proper operation.	
HORN BUTTON (IF EQUIPPED)	Check for proper operation.	

REPORTING SAFETY DEFECTS

In Canada, if you believe that your vehicle has a defect which could cause a crash or could cause injury or death, you should immediately inform Transport Canada in addition to notifying Bombardier Recreational Products Inc.

If Transport Canada receives similar complaints, it may open an investigation, and if it finds that a safety defect exists in a group of vehicles, it may order a recall and remedy campaign. However, Transport Canada cannot become involved in any individual problems between you, your dealer or Bombardier Recreational Products Inc.

To contact Transport canada:

819-994-3328 (Gatineau-Ottawa area or internationally)
Toll free : 1 800-333-0510 (in Canada)

Transport Canada - ASFAD
330 Sparks Street
Ottawa, ON
K1A 0N5

https://www.tc.gc.ca/recalls

VEHICLE INFORMATION

Handlebar

The handlebar controls the steering of the snowmobile. As the handlebar is rotated to right or left, the skis are turned right or left to steer the snowmobile.

⚠ WARNING
Fast reverse while turning, could result in loss of stability and control.

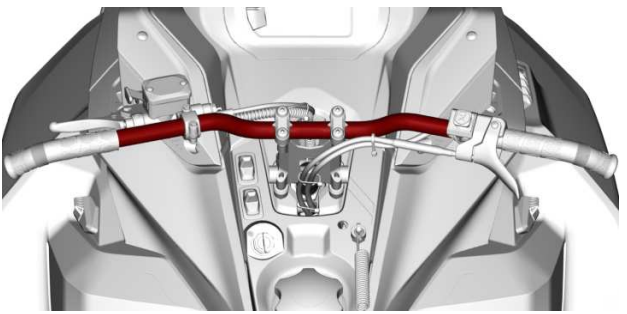

TYPICAL

Throttle Lever

Throttle lever is located on the RH side of handlebar.

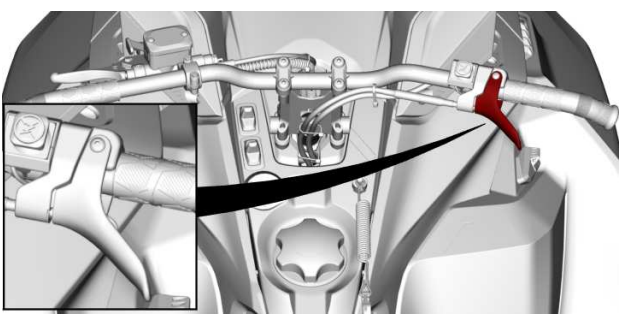

TYPICAL

Designed to be thumb activated. When squeezed, it increases the engine speed. When released, engine speed returns automatically to idle.

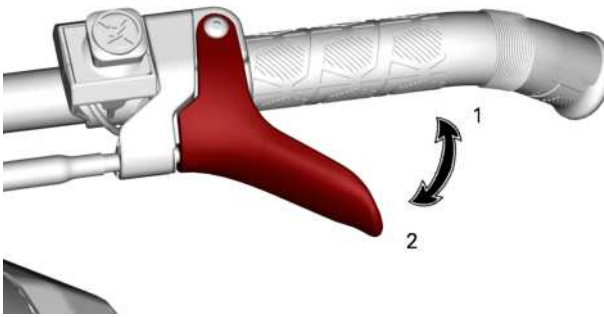

CABLE THROTTLE LEVER

1. To accelerate
2. To decelerate

⚠ WARNING

Test the throttle lever operation each time before starting the engine. The lever must return to the rest position once released. Otherwise, do not start engine.

Emergency Engine Stop Switch

The emergency engine stop switch is located on the RH side of handlebar.

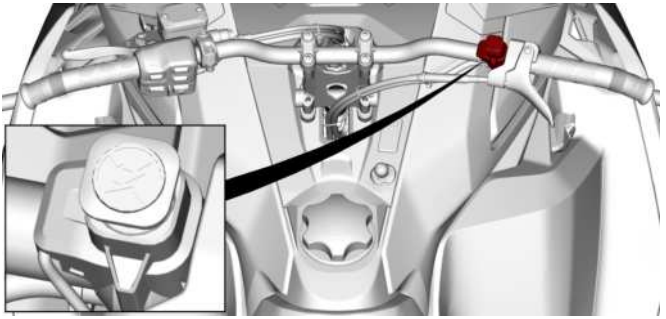

TYPICAL

To stop the engine in an emergency, push the switch down in OFF position and simultaneously apply the brake.

OFF POSITION

To allow engine starting, pull the switch up in ON position.

ON POSITION

All operators of the snowmobile should familiarize themselves with the function of the emergency engine stop switch by using it several times on first outing and whenever stopping the engine thereafter. This engine stopping procedure will become a reflex and will prepare operators for emergency situations requiring its use.

⚠ WARNING

If the switch has been used in an emergency caused by a suspected malfunction, the source of the malfunction should be determined and corrected before restarting engine. Visit an authorized BRP snowmobile dealer for servicing.

Brake Lever

Brake lever is located on the LH side of handlebar.

When squeezed, brake is applied. When released, it automatically returns to the rest. Braking effect is proportional to the pressure applied on the lever and to the type of terrain and its snow coverage.

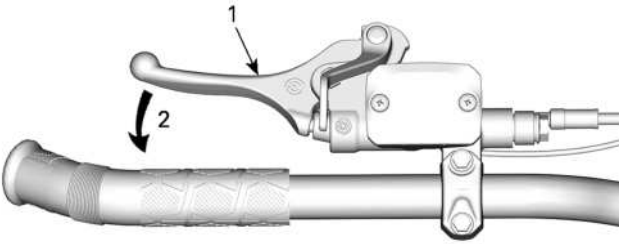

TYPICAL

1. *Brake lever*
2. *To apply brake*

Adjustable Brake Lever (if equipped)

To adjust the distance of reach of the brake lever, turn the adjustment wheel clockwise or counter clockwise.

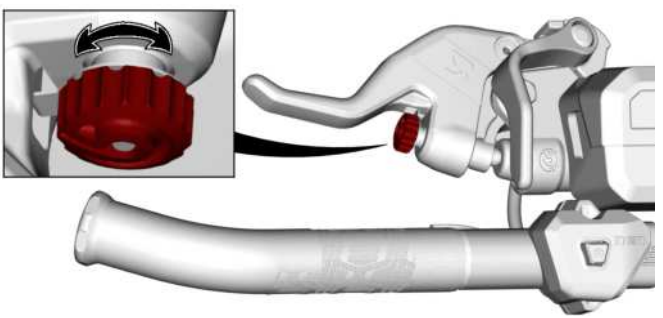

Brake Lever Adjustment

⚠ WARNING

It is important to adjust the brake lever to the user size and normal riding position.

Proper brake lever position should allow:

– Good support for the index and middle finger on the lever.
– Use the outer end of the lever to optimize the force.
– Proper wrist alignment.

Taking the time to adjust and try out the brake lever before your first snowmobile outing improves user comfort.

Adjusting the Brake Lever

1. Loosen the two bolts enough to easily move the brake lever on the handlebar.

NOTE:
If the two bolts are not loosen enough the brake lever can leave marks on the handlebar.

Models with steel handlebar

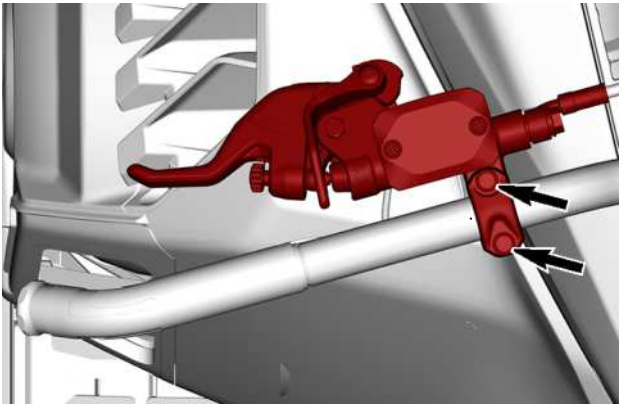

Models with aluminum handlebar and without multifunction switch

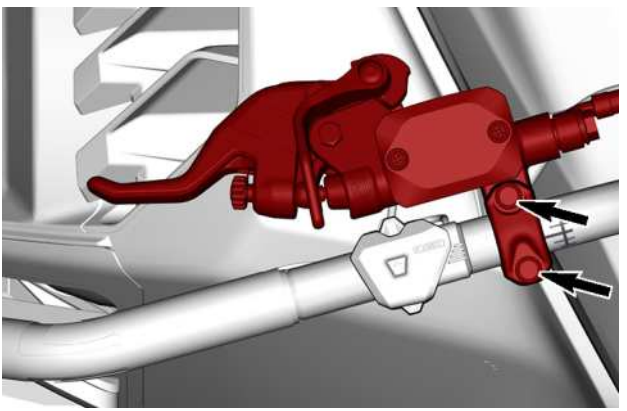

Models with aluminum handlebar and with multifunction switch

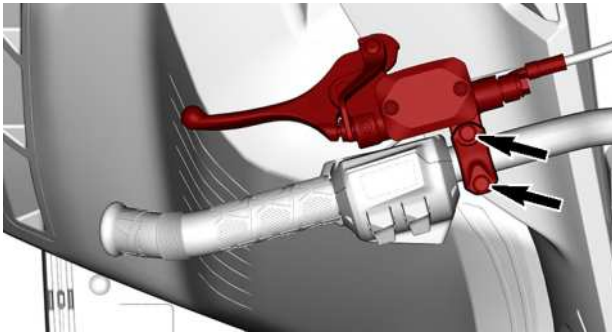

2. Locate the reference mark on the handlebar and respect the distance and rotation limits.

Models with steel handlebar

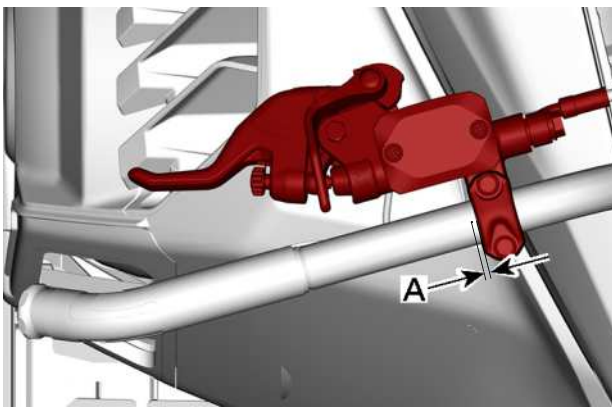

A. 0 to 5 mm (0 to 0.197 in) between the handlebar point and side of the brake lever

Models with aluminum handlebar and without multifunction switch

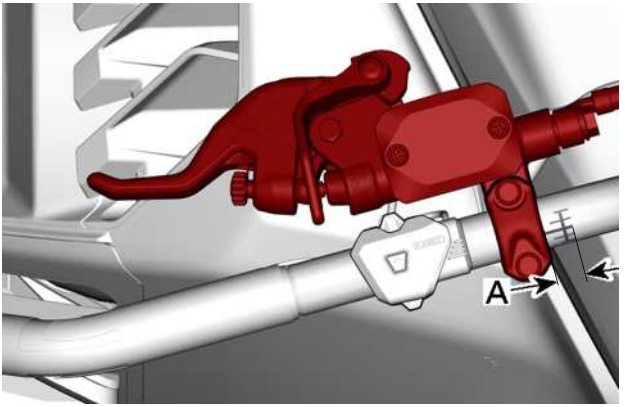

A. 0 to 9 mm (0 to 0.354 in) between the start of the handlebar mark and side of the brake lever

Models with aluminum handlebar and with multifunction switch

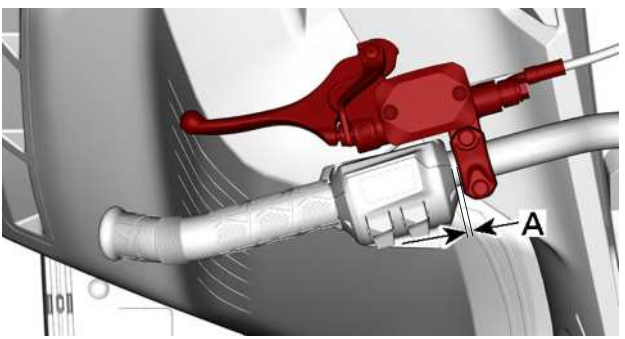

A. 0 to 15 mm (0 to 0.590 in) between the side of the multifunction switch and the side of the brake lever

3. With the operator on the driver seat, put the brake lever in the desired position.
4. Tighten the two bolts to specification.

TIGHTENING TORQUE	
Brake lever adjustment bolts	8.5 ± 1.5 Nm (75 ± 13 lbf-in)

Parking Brake Lever

Parking brake lever is located on the LH side of handlebar.

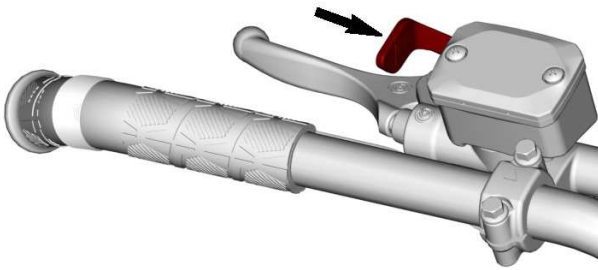

TYPICAL

Parking brake should be used whenever snowmobile is parked.

⚠ WARNING

Make sure parking brake is fully disengaged before operating the snowmobile. When you ride the vehicle, brake pads that are caused to drag by a continuous pressure on the lever may cause damage to the brake system and cause loss of braking capacity and/or fire.

To Engage Parking Brake

Apply and hold brake, then lock brake lever using the parking brake lever as shown.

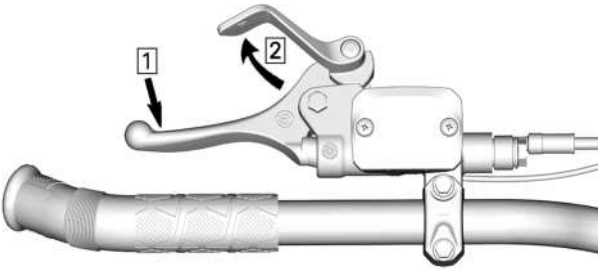

TYPICAL — ENGAGE MECHANISM

1. Apply and hold brake
2. Lock brake lever using parking brake lever

To Release Parking Brake

Squeeze brake lever. Parking brake lever will automatically return to its original position. Always release parking brake before riding.

Engine Cut-off Switch

On models using a D. E. S. S. key, this key is also the engine cut-off switch.

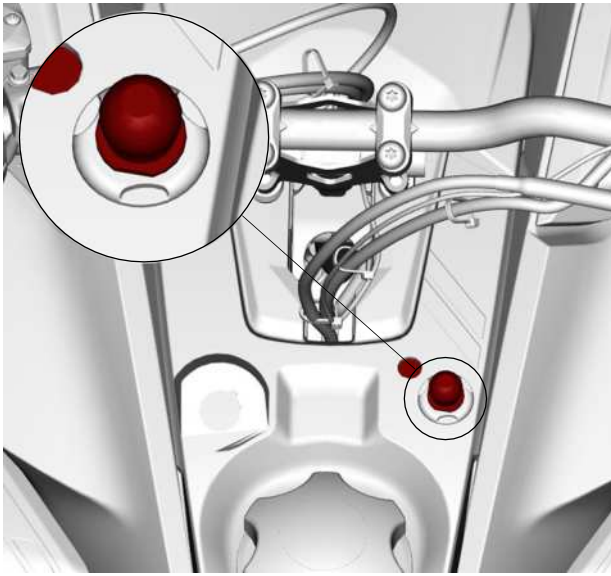

TYPICAL

The engine cut-off switch (tether cord) is located on the console.

The tether cord cap must be securely snapped on the engine cut-off switch to allow vehicle operation.

Pulling the tether cord cap from the switch shuts the engine off.

⚠ WARNING

Always attach the tether cord eyelet to clothing before starting the engine.

D.E.S.S. (Digitally Encoded Security System)

The tether cord cap has an integrated D.E.S.S. key to provide you and your snowmobile with the equivalent security of a conventional lock key.

The D.E.S.S. key contains an electronic chip which features a unique permanently memorized digital code.

Your authorized BRP snowmobile dealer has programed the D.E.S.S. of your snowmobile to recognize the D.E.S.S. key in the tether cord cap to allow vehicle operation.

If another tether cord is used without programming the D.E.S.S., the engine will start but will not reach drive pulley engagement speed to move vehicle.

Make sure the tether cord cap is free of dirt or snow.

D.E.S.S. Flexibility

The D.E.S.S. of your snowmobile can be programmed by your authorized BRP snowmobile dealer to accept up to 8 different keys.

We recommend the purchase of additional tether cords from your authorized BRP snowmobile dealer. If you have more than one D.E.S.S. equipped BRP snowmobile, each can be programmed by your authorized BRP snowmobile dealer to accept the other vehicles D.E.S.S. keys.

SECONDARY CONTROLS

Some features may not apply to your model or could be optional.

Vehicle safety labels are not shown on illustrations. For information on vehicle safety labels, refer to *Vehicle Safety Labels*.

Console Switches

Headlights Dimmer Button

Press to select HI or LOW beam. Lights are automatically ON when the engine is running.

Heated Grips and Heated Throttle Lever Switch

NOTE:

– Under 2000 RPM, heated grips will be limited at 50%.
– Battery level will limit heated grips. Under 13 V the heated grips will be turned off.

The switch on the console controls simultaneously the handlebar grips and the throttle lever heat intensity.

The balance between the temperature of the throttle lever and the grips can be adjusted.

Depress switch as required to select heating intensity to keep your hands at a comfortable temperature.

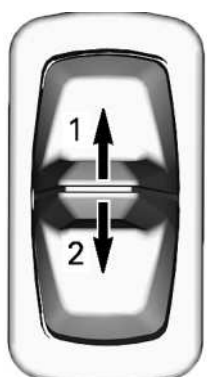

SWITCH ON CONSOLE

1. *Increase heat*
2. *Decrease heat*

The heating intensity is displayed via the digital display.

Heated Grips Display

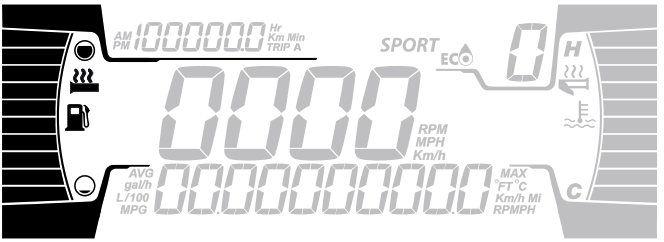

Heated Throttle Lever Display

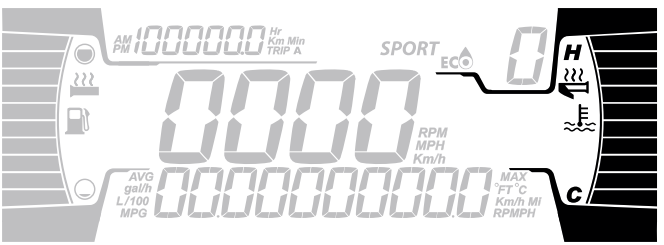

Heated grips and throttle lever will be OFF when there are no bars displayed on the gauge.

When the switch is released, display will return to fuel level and engine temperature.

Adjusting the Heated Grips Balance – 4.5” Digital Display with Console Switch

1. Using the LOWER (Mode) button on the digital display, do short presses until SETTINGS appears. Do a long press to select it.

TYPICAL

2. Using the LOWER (Mode) button, do short presses until THUMB CFG appears. Do a long press to select it.

TYPICAL

3. Use the console switch to adjust the heated grips balance between the thumb and the grips shown on the right side display.
4. Press the LOWER (Mode) button to exit menu.

Adjusting the Heated Grips Ratio – 10.25” Color Touchscreen Display

NOTE: The heated grips ratio can only be adjusted using the touchscreen. The touchscreen is not available when riding.

1. Go to the App Menu and select the Controls applet.
2. Slide the Heat Ratio cursor to adjust heated grips balance.

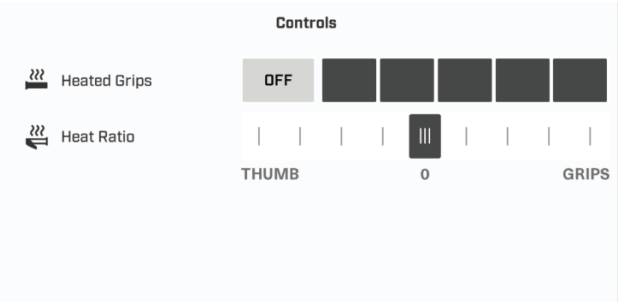

SHOT/ Electric Start/ Electronic Reverse (RER) Button

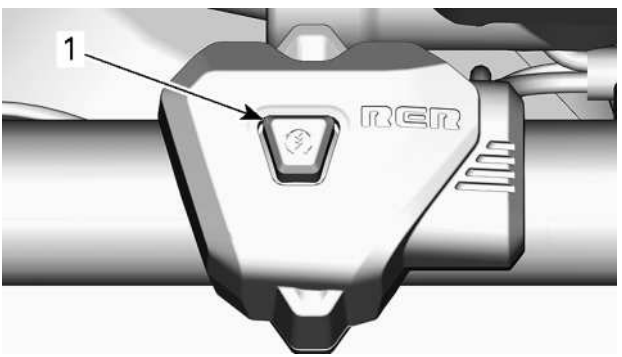

1. *Start / RER button*

On SHOT and electric start models, press to start engine.

Once engine is started, press to engage the electronic reverse.

Refer to *Basic Procedures* for instructions on how to use:

– SHOT system (if equipped)
– Electric starter (if equipped)
– Electronic Reverse (RER)

Rewind Starter Handle

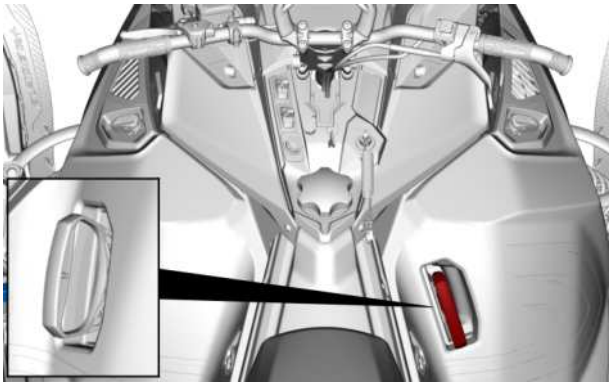

TYPICAL

Auto-rewind type located on right hand side of snowmobile under the side panel. Open right hand side panel to access the rewind starter handle. Refer to *Removing the Side Panels* in this subsection. To engage mechanism pull handle slowly until a resistance is felt then pull vigorously. Slowly release handle.

NOTE:
The maximum torque that can be transmitted to the engine by the rewind starter is 80 Nm (59 lbf-ft). The maximum force that can be exerted on the on the rope is 2 200 N (494.6 lbf).

Multifunction Display

Lower Display

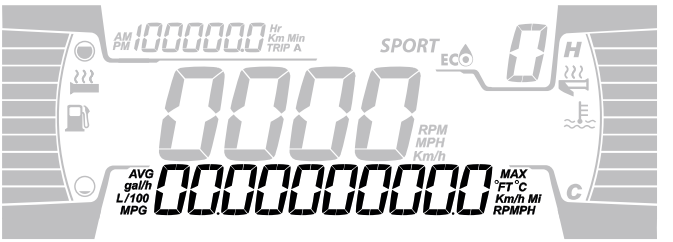

May display the following:

– RPM
– Speed
– Engine Temperature
– Fuel Statistics
– Settings
– Messages
– Outside temperature (if equipped)

To change the displayed information, use the gauge LOWER (M) button, or the Mode button on the handlebar multifunction switch, if equipped.

The SPEED STAT display shows the maximum and the averaged speed. Hold LOWER button for 3 seconds to reset.

When the SPEED display is chosen, the RPM is shown in the TRIP display.

Left Lateral Display

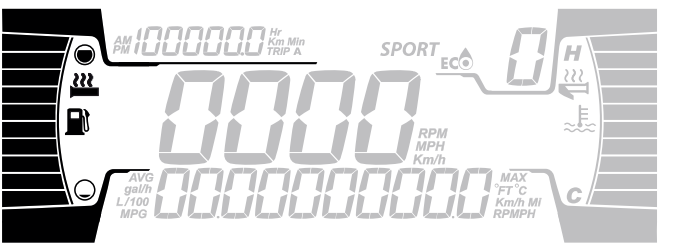

The left lateral display includes:

– Fuel level indicator

– Heated Grip level

Right Lateral Display

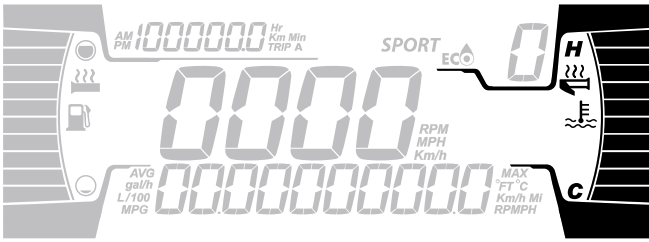

The right lateral display includes:

– Engine Temperature
– Heated throttle indicator

Central Display

Display the RPM of the engine or the vehicle speed in Km/h or MPH.

Trip Display

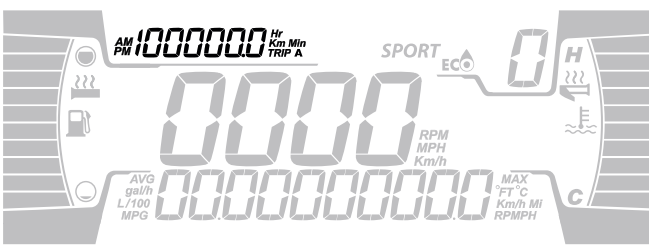

This display shows trip informations:

- Cumulative distance odometer
- Trip A hours
- Trip A distance (Km or mph)
- Vehicle hour meter
- Clock (If battery equipped)

To change the displayed information, use the gauge UPPER (T) button, or the Trip button on the handlebar multifunction switch, if equipped.

Warning Lamps and Indicators

The following indicator lamps will alert you to a vehicle condition that may become serious. Some lamps will illuminate when starting the vehicle to make sure they work. If any lamps remain on after starting the vehicle, refer to the respective system warning lamp for further information.

NOTE:
Some warning indicators appear in the display of the multifunction gauge and function the same as an indicator lamp but do not display when starting the vehicle.

Telltale Lights - Lower Bar

Lights	Description
!	ORANGE - Vehicle malfunction
	BLUE - The high beam are selected
	RED - The engine temperature is too high.
	RED - Parking brake is engaged or malfunction of the brake system
– +	RED - The battery voltage too low or problem with the electrical system

Lights	Description
	RED - Low injection oil level
	ORANGE - Low fuel level
	ORANGE **Turn on**: Malfunction of the vehicle emissions control system **Blink**: Engine problems, the limp home mode is activated. Have the vehicle serviced immediately.

Settings

Setup

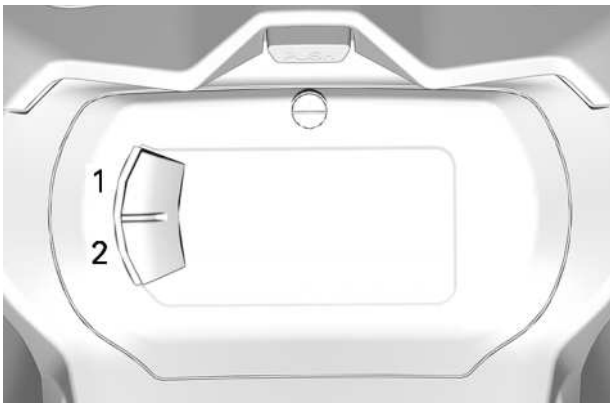

1. *Upper button (Trip)*
2. *Lower button (Menu)*

NOTE: A Trip and a Menu buttons can be found on the handlebar multifunction switch, if equipped.

Using the LOWER (M) button, select **SETTINGS** and hold to enter setting menu.

Reset Stats

Using LOWER button, select **RESET STAT** and hold to reset.

Unit Selection

This multifunction gauge is factory preset in metric units but it is possible to change it to imperial units.

Using LOWER button, select **UNITS** and hold button to change units.

Setting Clock

Using LOWER button, select **CLOCK** to change the clock.

1. Press LOWER button to select clock display.
2. Push and hold LOWER button for 1 second.
3. Press LOWER button to select 12:00 AM PM or 24:00 time base.
4. Push and hold LOWER button to acknowledge selection.
5. Press LOWER button to change hours (hours flash).
6. Push and hold LOWER button to acknowledge hour selection.
7. Press LOWER button to switch to minutes (minutes flash).
8. Push and hold LOWER button to acknowledge minutes selection.

Setting Language

The gauge display language can be changed. Refer to an authorized BRP snowmobile dealer for language availability and to setup the gauge to your preference.

GAUGE – 10.25” COLOR TOUCHSCREEN DISPLAY

Default Display

Light Mode

Dark Mode

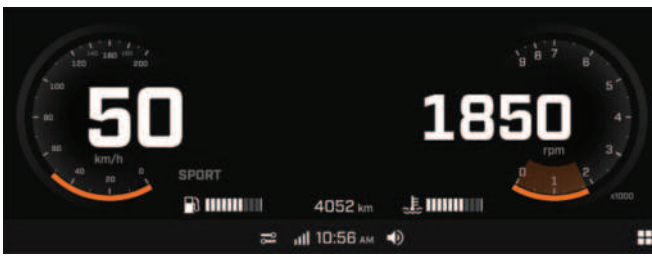

Navigating the Digital Display

⚠ WARNING

Reading or tampering with the multifunction gauge can distract you from the operation of the vehicle, particularly from constantly scanning the environment. Always pay attention to road conditions, ensure your environment is clear and free from obstacles. Furthermore, when riding, only glance at the multifunction gauge briefly to maintain awareness of road conditions.

The multifunction gauge includes digital gauges (speedometer and tachometer), indicator lamps and an infotainment center with a digital screen.

We recommend you practice selecting some functions on the infotainment center before riding. You will get used to them and they will be easier to use during your ride.

Use the handlebar multifunction switch to navigate (touchscreen not available when riding). Refer to *Secondary Controls*.

Pressing the Applet Switcher button on the handlebar multifunction switch will make the modal view appear on top of the cluster.

Center Display

In full gauge view, long press in the upper center of the screen to show one of the following extra gauges. Cycle through the extra gauges with additional long presses.

- Battery voltage
- Coolant temperature
- Belt temperature (if equipped)
- Smart-Shox suspension type (if equipped)
- Altitude (if equipped)
- Ratio boost % (if equipped)
- Air suspension (if equipped)

In full gauge view, long press the lower center of the screen to show one the following information. Cycle through the informations with additional long presses.

- Vehicle total distance
- Trip A distance
- Trip A hours
- Trip B distance
- Trip B hours
- Vehicle total hours

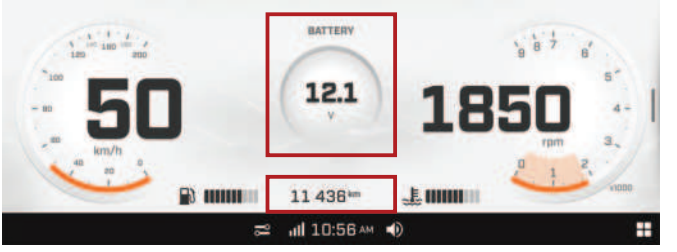

Narrow View Display

To change from full gauge view to narrow view, open an applet or slide the divider on the right side.

To change back to full gauge view, long press on Applet switcher or slide the divider back in place.

The size of the left and right lateral displays cannot be adjusted.

Left Lateral Display

In narrow view, the left lateral display includes:

- Fuel level indicator
- Engine temperature
- Speedometer
- Tripmeter
- RPM

In narrow view, long press the speedometer to change the display between speedometer only or speedometer and RPM.

In narrow view, long press the tripmeter to show one of the following information. Cycle through the informations with additional long presses.

- Current ride distance
- Trip A distance
- Trip A hours
- Trip B distance
- Trip B hours
- Current ride hours

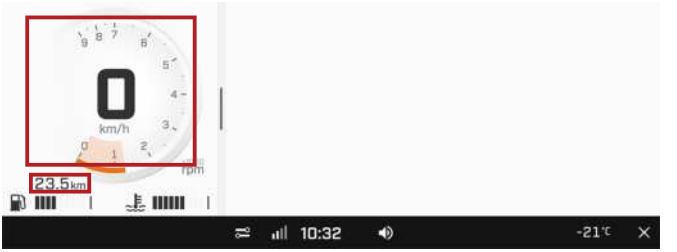

Right Lateral Display

In narrow view, the right lateral display includes various applet. Refer to *Applet Menu* for more information.

Applet Menu

To access the applet menu, press the applet menu icon on the bottom-right corner.

Press on an applet icon to open it.

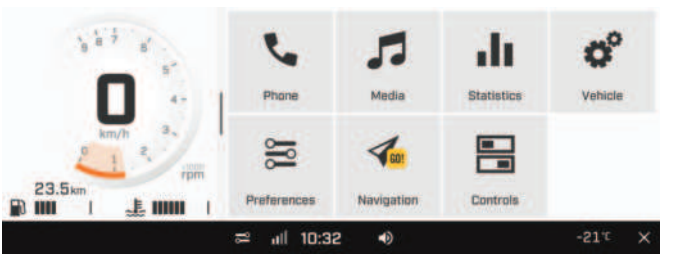

Phone

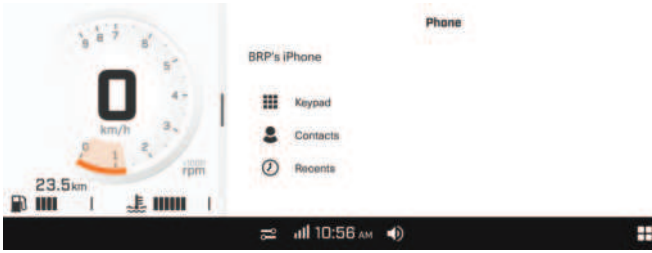

The Phone applet menu is to access:

– The keypad
– The phone contact list
– The phone history

NOTE:
To have access to the Phone menu, a phone and rider helmet (Headset) must be paired. Refer to *Pair your Smartphone Via Bluetooth*.

Statistics

The Statistics applet is used to get :

– Trip distance information
– Trip elapsed time information
– Average speed

3 sets of statistics are kept in memory. Trip A and Trip B can be reset independently (via the "..." button on the top left of the screen or by long-pressing on the OK button of the handlebar multifunction switch). Current ride statistic will be reset when the vehicle restart.

Media

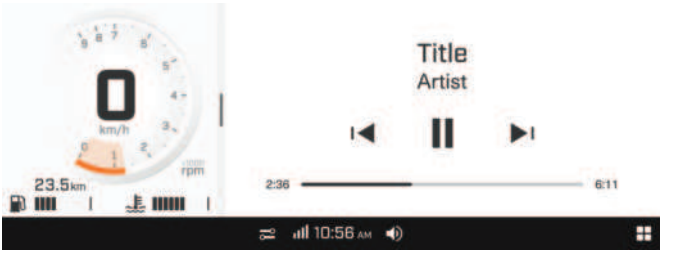

The Media applet allows to manage music listened in the helmet audio system.

Gives also song informations when available.

This vehicle is not equipped with speakers. An appropriate helmet audio system is required to listen to music.

Preferences

The Preferences applet is to:

- Adjust the display brightness and appearance (Light/Dark/Auto)
- Pair Bluetooth devices:
  - Phone
  - Driver headset
  - Passenger headset
- Connect vehicle to a Wi-Fi network
- Access General settings:
  - Adjust the units (Imperial/Metric)
  - Set the language
  - Set the date and time
  - Software update
  - Get information about manufacturer information and device regulatory compliance
  - Reset to factory settings
- Defining the apps to be used with the Applet Switcher button while riding
- Defining the settings to be used with the Ride Settings button while riding

It is recommended to check for software updates regularly.

Quick Preferences

To access the Quick Preferences menu, press the following icon.

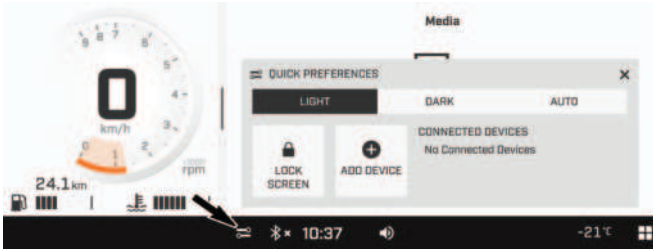

The Quick Preferences menu is to:

- Adjust the display appearance (Light/Dark/Auto)
- Lock the screen (press and hold anywhere on the screen to unlock)
- Add a Bluetooth device
- View connected Bluetooth devices

Vehicle Settings

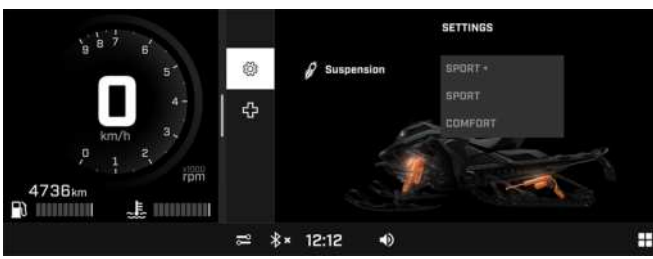

The Vehicle Settings applet is to:

- View vehicle Health:
  - Vehicle information
  - Faults (codes and description)
  - Procedures (summerization)
- Adjust Smart-Shox suspension settings (if equipped)

Navigation – With the BRP GO! App

There are two ways to use the BRP GO! app navigation features on the display:

– With the built-in GPS, it is not required to have a smartphone connected to the vehicle. For more information, refer to *Navigation - With the Built-In GPS (If Equipped)*
– Without the built-in GPS, a smartphone, with the BRP GO! app installed, must be connected (USB connection). The app can be downloaded from the Apple App Store or Google Play Store via a simple search.

NOTE:
For more information on the BRP GO! app, see the *BRP GO!* section in this manual or visit the Ski-Doo website.

NOTE:
The smartphone must be connected with a USB cable to the USB port located in the glove box.

User's personal data will be deleted from the cluster when the phone is disconnected.

User agrees that personal data (contact list and call history) be transferred to the cluster when smartphone is connected.

Navigation – With the Built-In GPS (If Equipped)

Select Navigation in the applet menu.

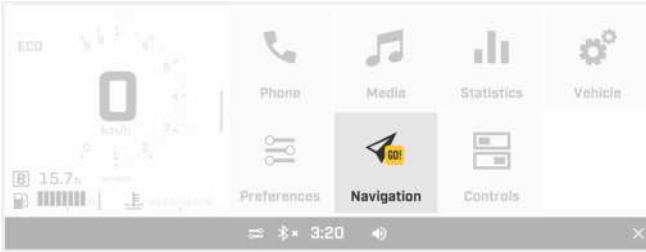

The map will be displayed and several options will become available.

- Vehicle live location
- Map Options
- Zoom In/Out
- Re-Center
- Compass

In Map Options, select Breadcrumbs to show or hide the points created from the vehicle path on the way out. This set of points will allow the operator to drive the same path on the way back.

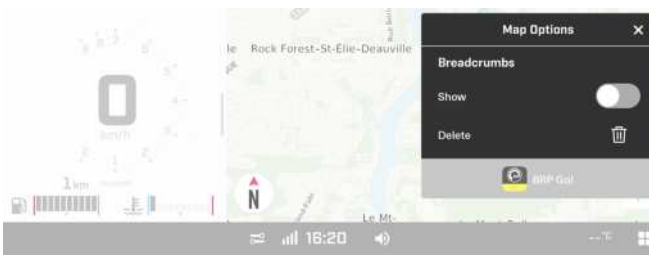

The current Breadcrumbs can be deleted to start a new path.

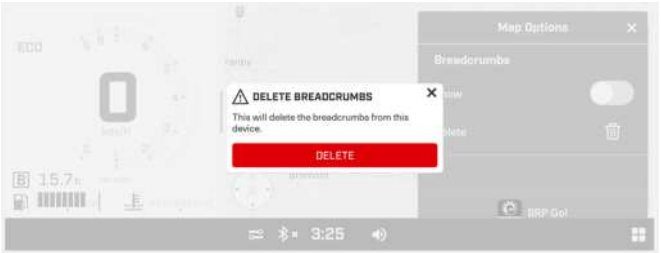

In Map Options, select BRP GO! to use the maps and the settings from the phone app. Refer to *BRP GO! App*.

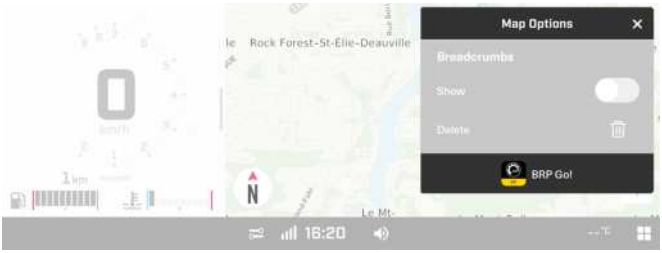

Follow the on-screen instructions.

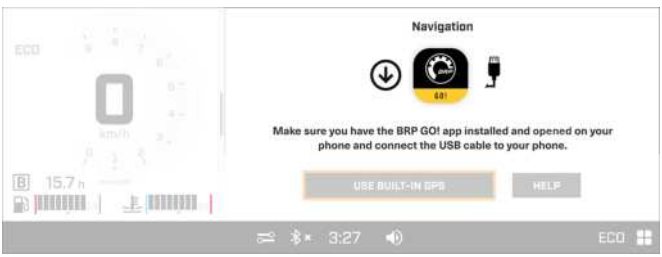

If one or several maps are downloaded directly in the 10.25” Color Touchscreen Display, they can be accessed using the “Use Built-In GPS” option without connecting a phone. Use the “Help” option for troubleshooting.

Warning Lamps and Indicators

The following indicator lamps will alert you to a vehicle condition that may become serious. Some lamps will illuminate when starting the vehicle to make sure they work. If any lamps remain on after starting the vehicle, refer to the respective system warning lamp for further information.

NOTE:
Some warning indicators appear in the display of the multifunction gauge and function the same as an indicator lamp but do not display when starting the vehicle.

Telltale Lights

The telltale lights are separated on two levels:

– Digital bar
– Physical bar

Digital Bar

DIGITAL PILOT LAMP – 10.25” COLOR DIGITAL TOUCHSCREEN

Lights	Description
	RED - Low engine oil pressure (if applicable)
	ORANGE - Low fuel level

Lights	Description
	RED - The battery voltage too low or problem with the electrical system
	RED - The engine temperature is too high.

Physical Bar

PILOT LAMPS – 10.25" COLOR DIGITAL TOUCHSCREEN

Lights	Description
	ORANGE - Vehicle malfunction
	BLUE - The high beam are selected
	RED - Parking brake is engaged or malfunction of the brake system
	ORANGE **Turn on**: Malfunction of the vehicle emissions control system **Blink**: Engine problems, the limp home mode is activated. Have the vehicle serviced immediately.

Icons and Indicators - Multifunction Display

Icon	Description
	Shut down
	Quick Preferences

Icon	Description
	Smartphone Network connection
10:56 AM	Clock
	Audio Volume
23 °C	Ambient Temperature
	Applet menu

Pairing your Smartphone Via Bluetooth

On the Vehicle

1. Open the Applet menu.
2. Go to "Preferences".
3. Select "Bluetooth".

4. Select "Phone".
5. Select "Add Device".

NOTE: More than one smartphone can be paired with the vehicle. However, only one will connect at any given time.

On the Phone

1. Activate your phone's bluetooth function.

Refer to your manufacturer's user guide for detailed procedure.

2. Select the bluetooth name of your vehicle display in the list of available devices.
3. A confirmation number will appear on the display and on the phone. Make sure that the numbers match.
4. Press Pair on your phone.
5. Allow Contacts and Favorite Sync on your phone.

Pairing a Headset

To pair a headset, refer to *Pairing your Smartphone Via Bluetooth* and select “Driver Headset” or “Passenger Headset”.

BRP GO! App

1) Download the BRP GO! Smartphone App

Download the BRP GO! app via the App Store for Apple™ or the Google™ Play Store for Android.

2) Connect your smartphone using a USB cable

It is recommended to use an original charging cable from the smartphone OEM to optimize transfer between the phone and the vehicle. Use the front USB port.

1. Unlock your phone screen
2. Connect your phone USB cable
3. A checkmark will appear on your phone screen once the connection is done.

3) Access the Navigation applet

In the Applet Menu, select "Navigation". You can also access the Navigation applet if it is set in the Applet Switcher app rotation.

Quick Tour of the BRP GO! App

1. Playground: Select your playground to see content related to your vehicle. For Ski-Doo snowmobiles, select the Snow playground.
2. Navigation: Access all the navigation features of the app such as route planning, turn-by-turn navigation, friends location, offline navigation, and more. You can access thousands of snowmobile trails across North America and Europe on the map.
3. Connect to my vehicle: Easily access content on how to connect the BRP GO! app to your vehicle display.
4. Devices: Add and manage your Vibe communications system.
5. FAQ: This link takes you to answers of common questions asked by riders like you. An internet connection is required.
6. Rides: Easily access your planned and completed rides made with the app.
7. My Profile: Manage your profile and your account settings.

Messages in Multifunction Gauge

Important information about vehicle condition is displayed on the multi-function gauge. When starting the engine, always look at the gauge for any indicator lamps or special messages.

Important information messages can also be displayed temporarily to assist indicator lamps.

Notifications will always appear at the top right corner of the screen.

There are two types of notifications:

– Vehicle notifications include warning, caution and notice messages
– Infotainment notifications include messages regarding connected devices

Vehicle notifications have priority over infotainment notifications when they are both present at the same time.

In the event vehicle goes into LIMP HOME, BRP recommends having the vehicle transported. If you operate the vehicle in LIMP HOME, avoid abrupt maneuvers and immediately go to the nearest authorized BRP snowmobile dealer to have your vehicle serviced before riding again. In LIMP HOME, the engine RPM is limited and therefore the vehicle speed.

EQUIPMENT

Some features may not apply to your model or could be optional.

Operator's Guide

The Operator's Guide should be stored in the *Front Storage Compartment*.

Heated Cell Case (if equipped)

A heated cell case is mounted underneath the front storage compartment cover. It allows to keep your cell phone at a warm temperature while charging.

The temperature inside the case is kept between 5° C and 15° C (41° F and 59° F).

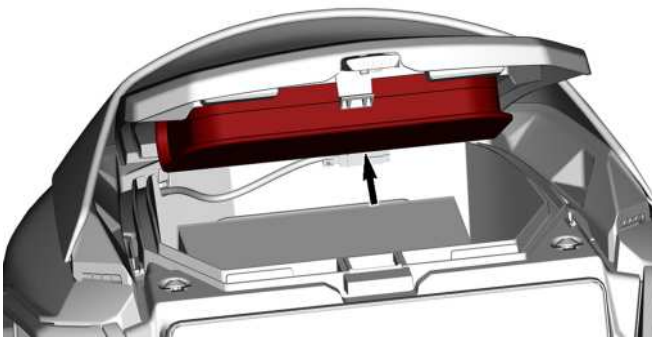

Power Outlet - USB (if equipped)

The USB power Outlet is located in the front storage compartment. It allows to charge your cell phone while stored in the heated cell case.

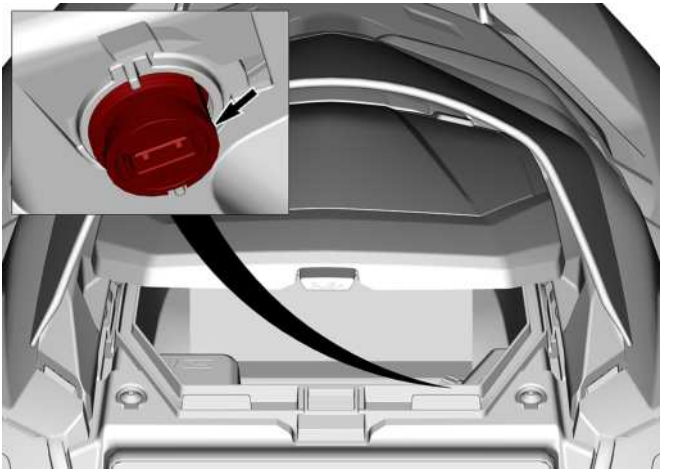

TYPICAL

Tools

The inside of the upper LH side panel is designed to hold the tools allowing for basic maintenance.

The tools are supplied with the vehicle. They should always be installed in their proper location and orientation.

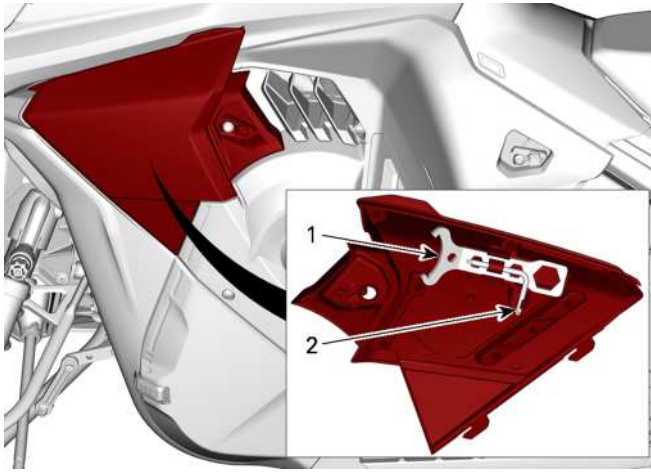

1. *Suspension adjustment tool*
2. *Pulley expander and headlight adjustment tool*

Install in the following sequence:

⚠ CAUTION
Make sure tools are secured properly. Tools may detach and cause damage to rotating parts.

1. Press the center of the suspension adjustment tool on the retaining tabs.

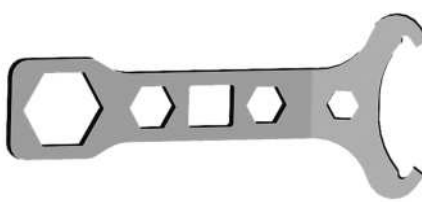

SUSPENSION ADJUSTMENT TOOL

2. Slide the pulley expander and headlight adjustment tool long end into hole.

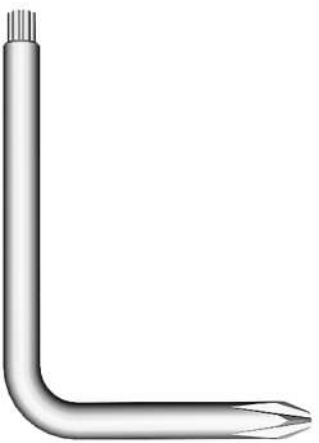

PULLEY EXPANDER AND HEADLIGHT ADJUSTMENT TOOL

3. Rotate and clip short end in place.

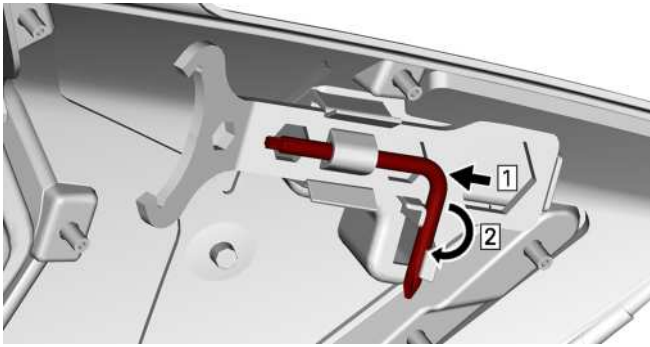

Step 1. Slide
Step 2. Rotate and clip

Drive Belt Guard

The drive belt guard is part of the LH side panel. Refer to *Side Panels* in *Body and Seat* for procedure to remove it.

⚠ WARNING

NEVER operate engine:

- **Without shields and belt guard securely installed.**
- **With hood and/or side panels opened or removed.**

NEVER attempt to make adjustments to moving parts while engine is running.

Mountain Strap

This handlebar strap shall be used only to provide additional pulling force when snowmobile is stuck in a slanted position. On an exceptional basis it can be used at very slow speed only, when standing on the right running board to bring the vehicle back on its desired path. When riding, both hands should remain on the handlebar grips to provide braking capability, as well proper steering and directional control. Do not use handlebar strap for towing, lifting or side hilling.

⚠ WARNING

Do not use while riding at speed. Steering control is highly reduced and brake control is not possible.

Adjustable Stopper Strap (If Equipped)

Can be used to adjust the stopper strap length. refer to *Tune Your Ride*.

Ice Scratchers

Some models are factory equipped with ice scratchers which provide lubrication and cooling to slides and track guides for **short rides** on ice and hard packed trails.

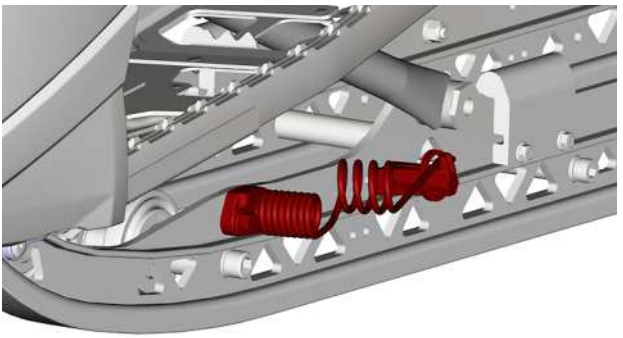

Ice scratchers must be used whenever the vehicle is operated on a trail, hard snow or ice.

BRP ice scratchers are designed to be used in forward or reverse.

Spare Drive Belt Holder

A spare drive belt can be stored in a holder located at the rear of the fuel tank.

NOTE:
The spare drive belt is not supplied with the snowmobile.

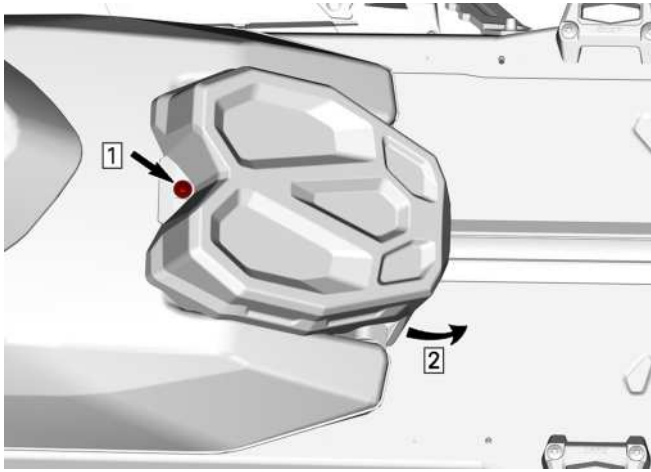

MODELS WITHOUT BATTERY

Step 1. Remove fastener
Step 2. Slide holder

MODELS WITHOUT BATTERY – INSIDE THE COVER

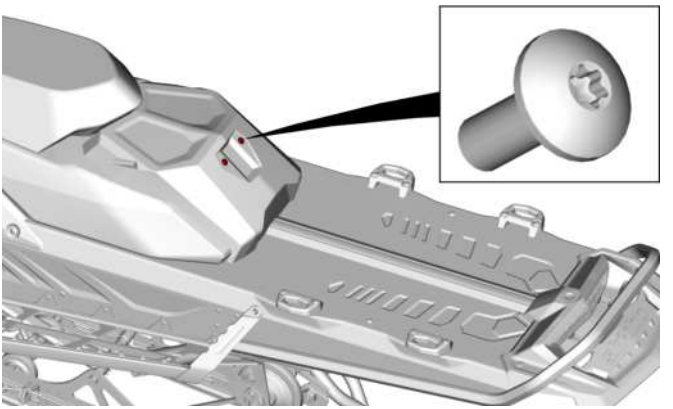

MODELS WITH BATTERY

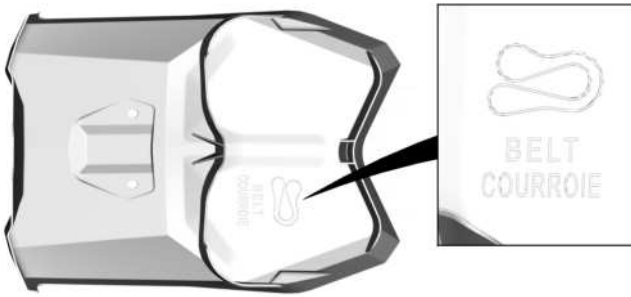

MODELS WITH BATTERY – INSIDE THE COVER

Front and Rear Bumpers

To be used whenever snowmobile requires manual lifting.

⚠ CAUTION
Beware of injuries by using proper lifting techniques, notably using your legs force. Do not attempt to lift the rear of vehicle if it is above your limits. Use appropriate lifting device or have assistance to share lifting stress if possible.

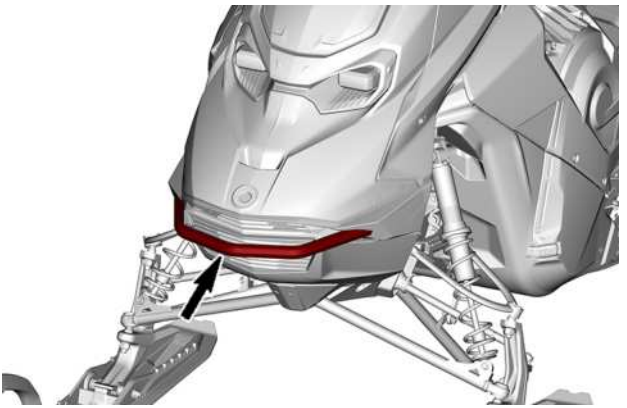

TYPICAL FRONT BUMPER

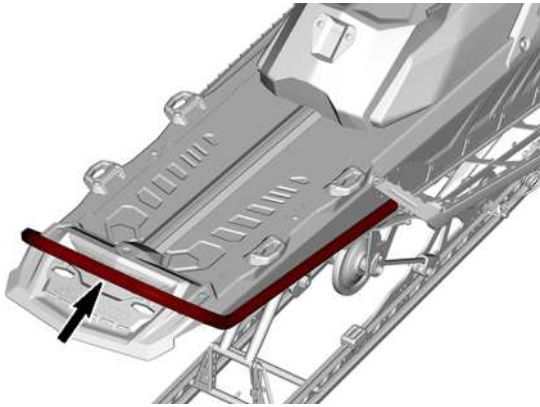

TYPICAL REAR BUMPER

NOTICE

Do not use skis to pull or lift snowmobile.

Front Storage Compartment

A storage compartment is located at the front of the vehicle, above the gauge.

The Operator's Guide and the emergency starter rope are in the front storage compartment.

To open, push the button and lift the cover.

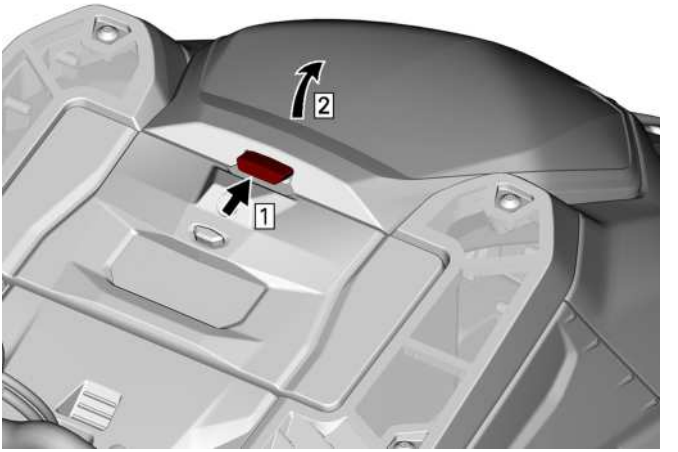

Step 1. Push button
Step 2. Lift cover

NOTE:
When closing, make sure cover is secured properly. You will hear a "click".

NOTE: Make sure that the zipper of the cellular pouch is not interfering when you close the front storage compartment cover.

Side Panels

⚠ WARNING

Never operate engine with side panels opened or removed from vehicle.

Removing the Side Panels

1. **RH Side Panel**

    1. Unlock the following latches.

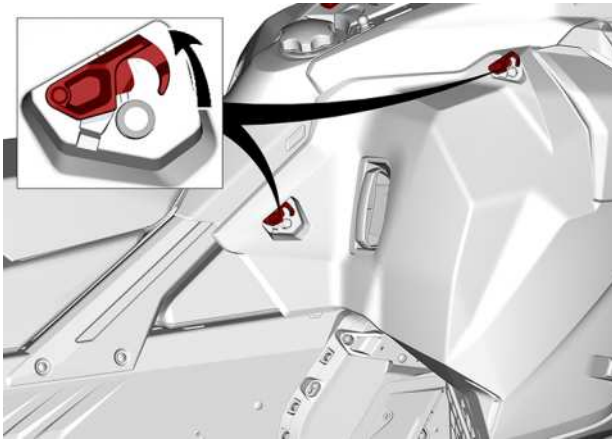

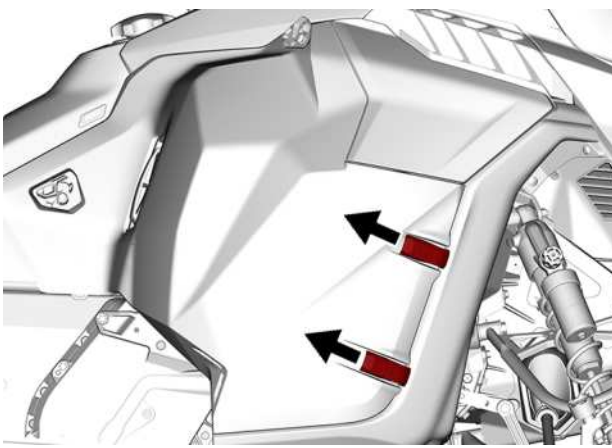

2. Pivot then slide the side panel.

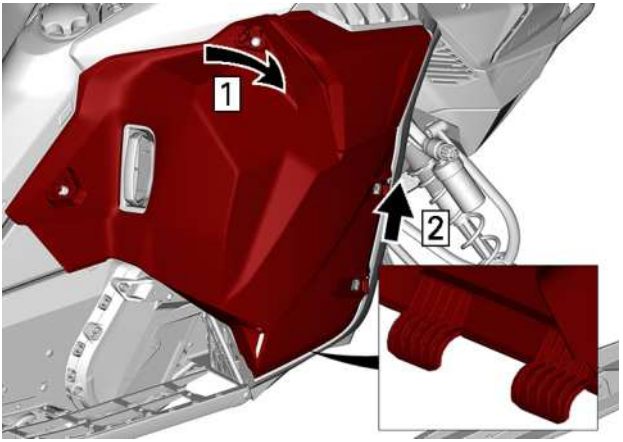

Step 1. Pivot side panel
Step 2. Slide side panel

2. **LH Side Panel**

   1. Unlock the following latches.

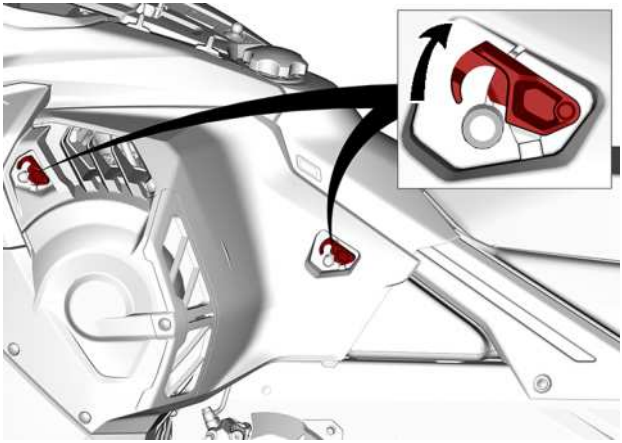

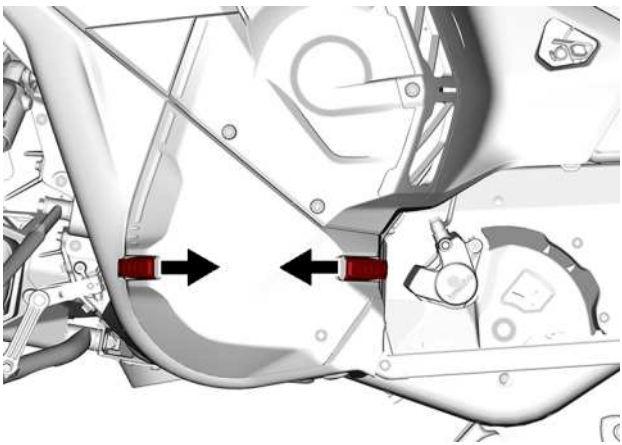

   2. Remove the upper LH side panel.

3. Unlock the following latch.

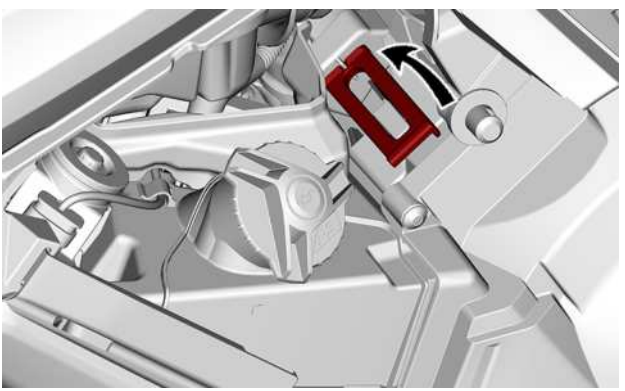

4. Release the pulley guard safety lock and slide the panel outwards.

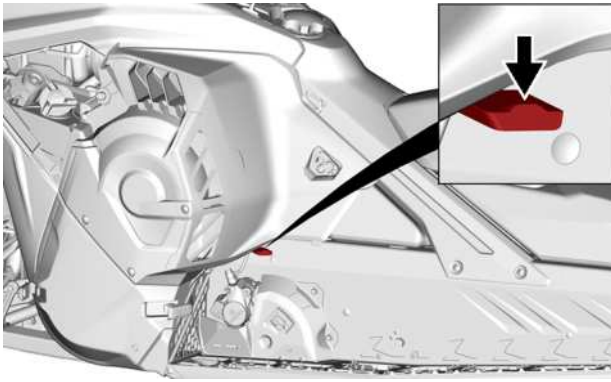

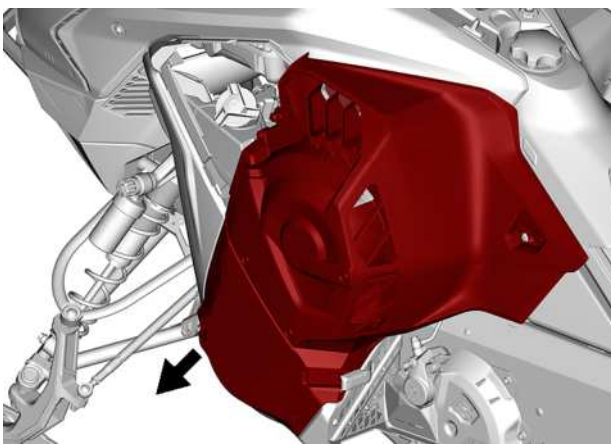

NOTICE

Make sure to place panel in a safe place to avoid scratching.

Installing the Side Panels

The installation is the reverse of the removal procedure. Make sure the bottom panel tab is inserted in the side bottom pan during

installation. If not, side bottom pan will be scratched and panel tab can get damaged

Upper Body Module

Removing the Upper Body Module

1. Remove both side panels. Refer to *Side Panels* in this section.
2. Remove the access cover by sliding it rearward.

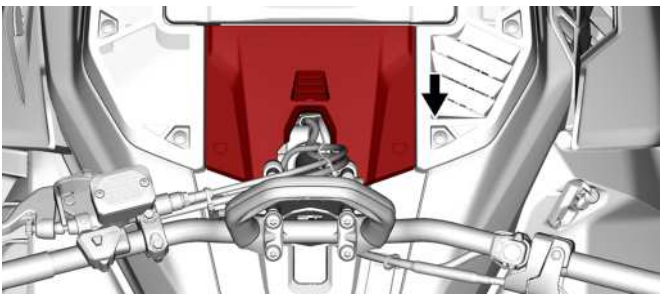

TYPICAL

3. Disconnect the following connectors.

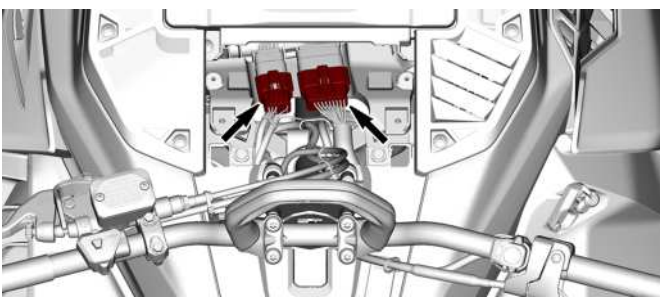

4. Remove the following fasteners.

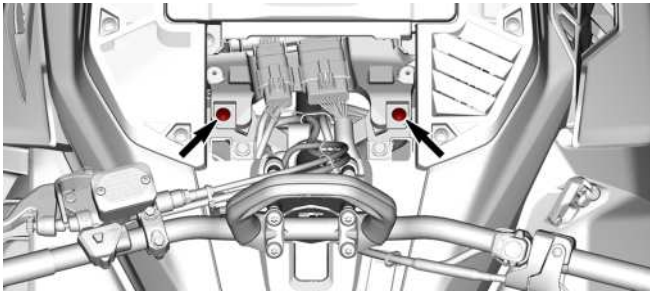

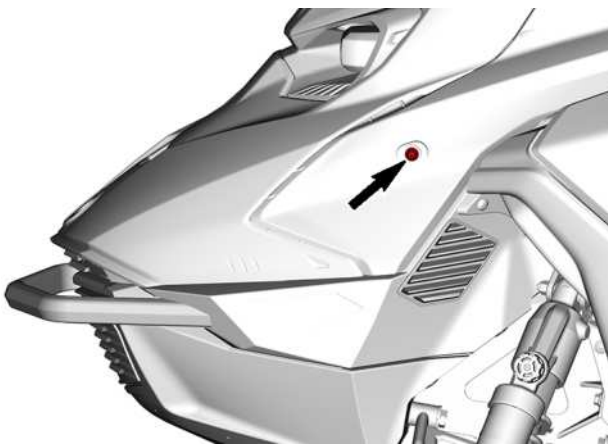

LH SIDE

5. Loosen the air intake duct clamp.

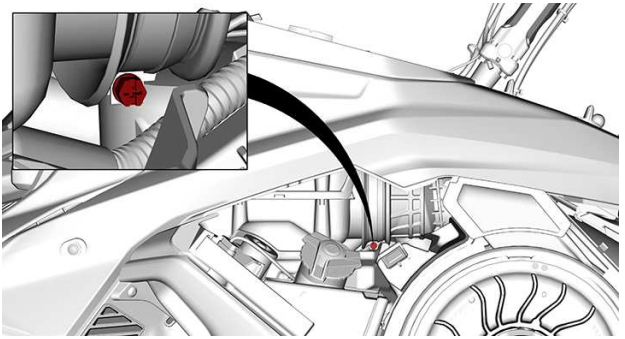

6. Remove the upper body module.

   1. Grab the upper body module in the gauge support area.
   2. Pull the module forward.
   3. Remove the module from the vehicle.

Installing the Upper Body Module

The installation is the reverse of the removal procedure. However, pay attention to the following.

1. Ensure to engage front hood tabs in front bottom pan, and rear side hood tabs in rear console when pushing the module back in place.

FRONT HOOD TAB

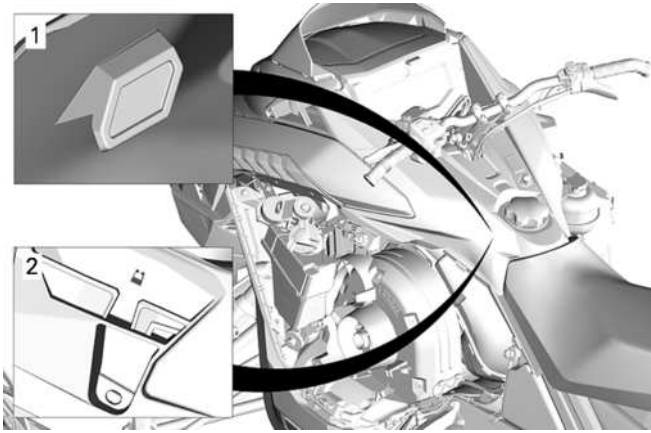

TYPICAL

1. *Rear end hooks*
2. *Console slots*

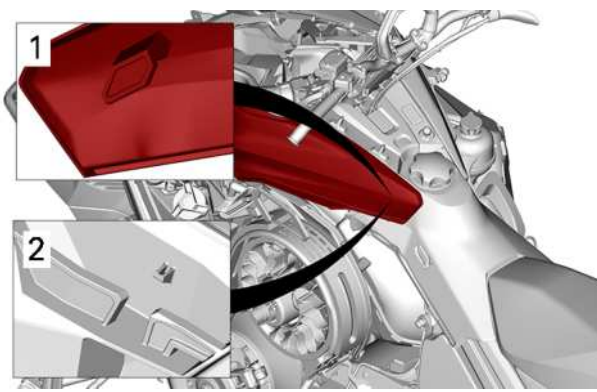

1. *Rear end hooks*
2. *Console slots*
2. Ensure to connect the air intake hose.

Tightening Torque	
Intake duct clamp	1.0 ± 0.2 Nm (9 ± 2 lbf-in)

3. On both sides, install the upper body module retaining screws.

Tightening Torque	
Upper body module screw	1.8 ± 0.2 Nm (16 ± 2 lbf-in)

4. Connect the module connectors.

Seat

Removing the Seat – Front Tab Lock

1. From between the fuel tank and the seat front end, pull the locking tab upwards.
2. Slide the seat backwards while holding the tab up.

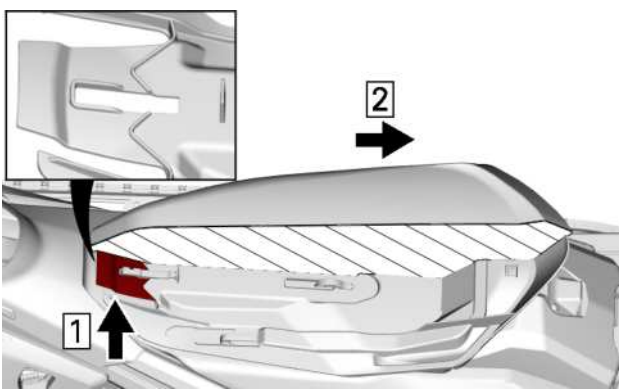

TYPICAL — CROSSCUT VIEW OF SEAT FOAM

1. Pull upwards
2. Slide backwards

Installing the Seat (tab lock)

NOTICE

Riding the vehicle with any objects between the seat and the fuel tank could damage the fuel tank. NEVER place any objects between seat and fuel tank.

Place seat over the hooks, then slide it forward until the tab locks over the front hook.

⚠ WARNING

Make sure seat is securely latched before riding.

Fuel Requirements

NOTICE

Always use fresh gasoline. Gasoline will oxidize; the result is loss of octane, volatile compounds, and the production of gum and varnish deposits which can damage the fuel system.

Alcohol fuel blending varies by country and region. Your vehicle has been designed to operate using the recommended fuels, however, be aware of the following:

- Use of fuel containing alcohol above the percentage specified by government regulations is not recommended and can result in the following problems in the fuel system components:
  - Starting and operating difficulties.
  - Deterioration of rubber or plastic parts.
  - Corrosion of metal parts.
  - Damage to internal engine parts.
- Inspect frequently for the presence of fuel leaks or other fuel system abnormalities if you suspect the presence of alcohol in gasoline exceeds the current government regulations.
- Alcohol blended fuels attract and hold moisture which may lead to fuel phase separation and can result in engine performance problems or engine damage.

Recommended Fuel

Use unleaded gasoline containing MAXIMUM 10% ethanol. The gasoline must have the following minimum octane requirements.

Fuel type	Engine	Min. octane rating
Fuel with NO ethanol	600R E-TEC 850 E-TEC 850 E-TEC Turbo R	91 AKI (RON+MON)/2 95 RON
Fuel which may contain up to 10% MAX ethanol	600R E-TEC 850 E-TEC 850 E-TEC Turbo R	91 AKI (RON+MON)/2 95 RON E10

NOTICE

Never experiment with other fuels. Engine or fuel system damages may occur with the use of an inadequate fuel.

NOTICE

Do NOT use fuel from fuel pumps labeled E85.

Use of fuel labeled E15 is prohibited by U.S. EPA Regulations.

Fueling Procedure

⚠ WARNING

Always stop engine before refueling.

⚠ WARNING

Fuel is flammable and explosive under certain conditions.
Never use an open flame to check fuel level.
Never smoke or allow flame or spark in vicinity.
Always work in a well-ventilated area.

NOTE:
Do not sit or lean on seat when fuel tank cap is not properly installed.

1. Stop engine.
2. Have operator and passenger get off vehicle.

⚠ WARNING

Do not allow anyone seated on the vehicle while fueling.

3. Unscrew slowly the fuel reservoir cap counterclockwise to stabilize pressure before removing it.

NOTE:
A short whistling sound is normal.

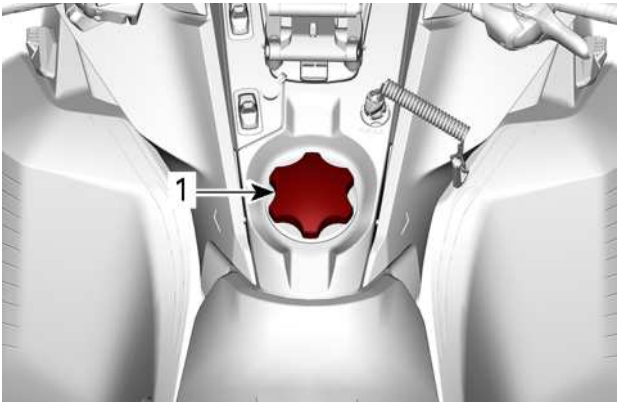

TYPICAL

1. Fuel tank cap

4. Insert the spout into the filler neck.
5. Pour fuel slowly so that air can escape from the tank and prevent fuel flow back. Be careful not to spill fuel.
6. Stop filling when the fuel reaches the bottom of filler neck. **Do not overfill.**

⚠ WARNING

Never top up the fuel tank before placing the vehicle in a warm area. As temperature increases, fuel expands and may overflow.

7. Fully tighten fuel reservoir cap clockwise.

⚠ WARNING

Always wipe off any small fuel spillage from the vehicle. If a major spillage occurs, remove side panels to remove fuel vapors from engine compartment before starting.

NOTE:
Do not sit or lean on seat when fuel tank cap is not properly installed.

INJECTION OIL

Recommended Injection Oil

Rotax® engines were developed and validated using the XPS® oil. BRP recommends the use of its XPS injection oil or an equivalent at all time. Damages caused by the use of an injection oil not suitable for this 2-stroke direct fuel injection engine may not be covered by the BRP Limited Warranty.

RECOMMENDED Injection Oil	
850 E-TEC	XPS 2T E-TEC Synthetic Oil (full synthetic)
IF THE RECOMMENDED XPS ENGINE OIL IS NOT AVAILABLE	
Use a 2-stroke lubricant designed for snowmobiles meeting or exceeding the following lubricant industry specifications: – JASO FD (M345-2004) – SAE Grade 4 (F / M 4)	

Injection Oil Level Verification

The injection oil reservoir is located behind the LH side panel. Refer to *Equipment* for opening procedure.

Always maintain a sufficient amount of recommended injection oil in the injection oil reservoir.

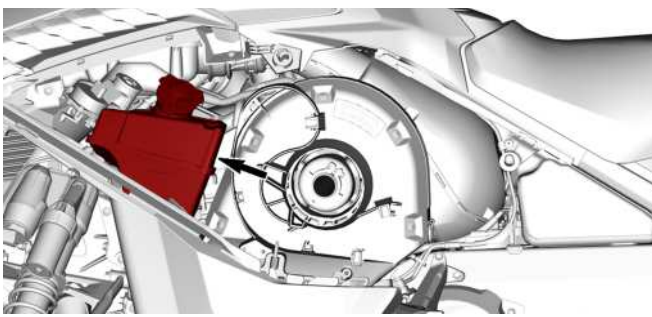

Marks on the tank indicates "1/4" and "1/2" of the total amount of oil.

NOTICE
Check level and refill every time you refuel.

Adding Injection Oil

Remove injection oil reservoir cap.

Add injection oil.

NOTE:
Do not overfill.

Wipe the reservoir cap seal and flange area.

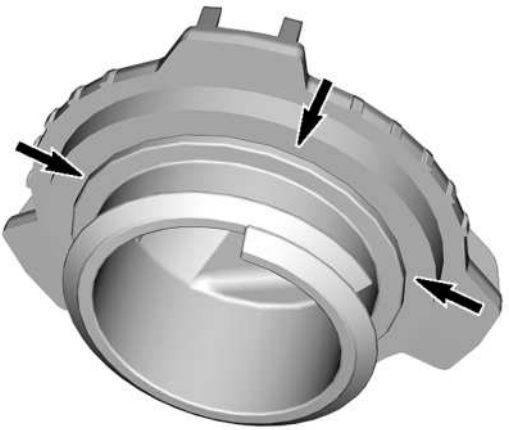

Reinstall cap.

NOTICE
Do not overtighten.

⚠ WARNING
Wipe off any oil spills. Oil is highly flammable when heated.

BREAK-IN PERIOD

Operation During Break-In

Engine

During the break-in period:

– Avoid prolonged full throttle operation.
– Avoid sustained accelerations.
– Avoid prolonged cruising speeds.
– Avoid engine overheating.

However, brief accelerations and speed variations contribute to a good break-in.

During a predetermined period, the engine management system controls some engine parameters.

The duration is based on fuel volume. It will take approximately two fuel tanks to complete the break-in.

During this period:

– The engine performance and behavior will not be optimal.
– The fuel and oil consumption will be higher.

Drive Belt

A new drive belt requires a break in period of 50 km (30 mi).

During the break-in period:

– Avoid strong acceleration and deceleration.
– Avoid pulling a load.
– Avoid high speed cruising.

If the vehicle creeps, lower the drive belt height from the preliminary setting. Refer to *Drive Belt* in *maintenance procedure*.

Engine Starting Procedure

Procedure

1. Apply parking brake.
2. Recheck throttle control lever operation.
3. Put your helmet on.
4. Ensure that the tether cord cap is installed on the engine cut-off switch and that the cord is attached to your clothing eyelet.
5. Ensure that the emergency engine stop switch is in the ON position (up).

⚠ WARNING

Never depress throttle while starting engine.

6. Release parking brake.

NOTE:
For an initial cold start, do not release parking brake. Perform the *vehicle warm-up* procedure as explained below.

Manual Start Models

Grab rewind starter handle, pull handle slowly until a resistance is felt, then hold handle firmly and pull vigorously to start engine.

NOTE:
The maximum torque that can be transmitted to the engine by the rewind starter is 80 Nm (59 lbf-ft). The maximum force that can be exerted on the on the rope is 2 200 N (494.6 lbf).

Electric Start Models

Press the START/RER button to engage the electric starter and start the engine. Release button immediately when engine has started.

NOTICE

Do not engage electric starter for more than 10 seconds at a time. A rest period should be observed between the cranking cycles to allow electric starter to cool down.

Emergency Starting

The engine can be started with the emergency starter rope supplied in the storage compartment. Refer to *Body and Seat*.

Remove the drive belt guard. Refer to *Body and Seat*.

⚠ WARNING

Do not wind starting rope around your hand. Hold rope by the handle only. Do not start the engine by the drive pulley unless it is a true emergency situation. Have the snowmobile repaired as soon as possible.

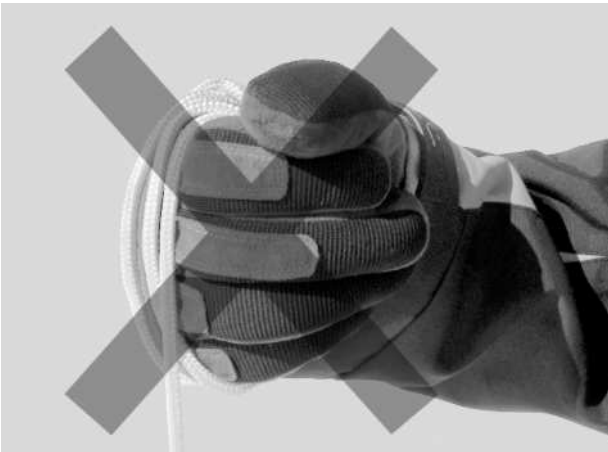

Attach one end of emergency rope to the rewind handle.

NOTE:
The suspension adjustment tool can be used as an emergency handle.

Cross the rope on the first turn as shown.

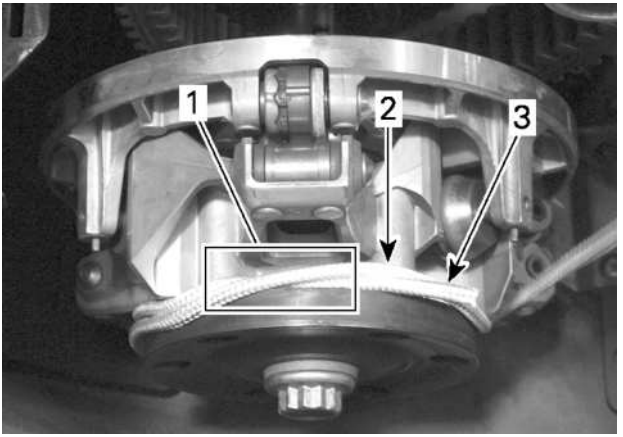

1. *Rope crossed*
2. *Rope to be winded*
3. *Rope end*

Wind rope two turns counterclockwise tightly around the drive pulley where shown.

Pull the rope using a sharp, crisp pull so the rope comes free of the drive pulley.

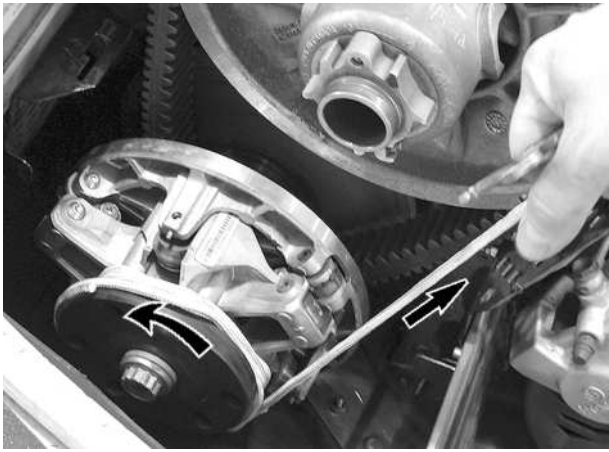

Start engine as per usual manual starting.

⚠ WARNING
When starting the snowmobile in an emergency situation, using drive pulley, be extremely careful when reinstalling the belt guard/ side panel.

Vehicle Warm-Up

Before every ride, vehicle has to be warmed up as follows.

1. Start engine as explained in *Engine Starting Procedure* above.
2. Allow engine to warm up one or two minutes at idle speed.

NOTE:
Engine will shut down after approximately 12 minutes of idling.

3. Disengage parking brake.
4. Apply throttle until drive pulley engages. Drive at low speed the first two or three minutes.

NOTICE

If vehicle does not move when throttle is applied, stop engine, remove tether cord cap from the engine cut-off switch, then do the following.

- **Check if skis are stuck on the ground. Lift one ski at a time by the handle, then put it down.**
- **Check if track is stuck on the ground. Lift rear of snowmobile enough to clear track from the ground, then drop.**
- **Check rear suspension for hard snow or ice accumulation that could interfere with track rotation. Clean the area.**

⚠ CAUTION

Beware of injuries by using proper lifting techniques, notably using your legs force. Do not attempt to lift the rear of vehicle if it is above your limits.

⚠ WARNING

Make sure tether cord cap is removed before standing in front the vehicle, getting close to the track or rear suspension components.

NOTE:
Warm-up is electronically controlled. During this period (up to 10 minutes depending on ambient temperature), engine RPM is limited.

Reverse (RER)

When the engine is running, depressing the RER button will slow down engine RPM to almost a stop and advance the ignition timing to invert crankshaft rotation.

- Engine will automatically shift into forward when restarting after stopping or stalling.
- Shifting procedure will take place only when the engine is running.
- If engine is running at a speed above 4300 RPM, the function of the RER button is disabled.
- It is recommended to warm up the engine to its normal operating temperature before shifting.

Shifting in Reverse – 4.5” or 7.2” Digital Display

1. Bring vehicle to a complete stop.
2. Apply and hold brake. Remain seated, refer to *Rider Position (Reverse Operation)* in *Riding the vehicle* for posture information.

3. With engine at idle speed, select reverse (R) gear using the Start / RER button.
4. Wait until reverse beeper sounds, then gently depress throttle lever.

⚠ WARNING

The reverse speed is not limited. Always proceed with caution as fast reverse could result in loss of vehicle stability. Come to complete stop before activating the reverse. Always remain seated and apply the brake before shifting. Ensure the path behind is clear of obstacles or bystanders before proceeding.

Shifting in Forward from Reverse

1. Bring vehicle to a complete stop.
2. Apply and hold brake.
3. Press and release the RER button.
4. Apply throttle slowly and evenly. Allow drive pulley to engage then accelerate carefully.

Shutting Off the Engine

Release throttle lever and wait until engine has returned to idle speed.

Shut off the engine using either the emergency engine stop switch or by pulling off the tether cord cap from the engine cut-off switch.

⚠ WARNING

Always remove the tether cord cap from engine cut-off switch when vehicle is not in operation in order to prevent accidental engine starting or to avoid unauthorized use by children or others or theft.

After engine shutdown:

The fan may remain active between 1 and 4 minutes after the shutdown depending on the exhaust temperature.

RIDING CONDITIONS AND YOUR SNOWMOBILE

Altitude

At factory, your snowmobile was calibrated to be used within an altitude range (relative to sea level).

A new snowmobile has a tag attached to the handlebar indicating its calibration. Refer to *Safety Information on Vehicle*.

If for any reason you don't know your snowmobile calibration, contact an authorized BRP snowmobile dealer.

If your snowmobile is to be used at an altitude outside the specified range, have it calibrated accordingly by an authorized BRP snowmobile dealer.

NOTICE

An inappropriate altitude calibration would decrease performance and may cause serious damage to the snowmobile.

Temperature

The engine management of these engines provides the optimum air/fuel ratio for all temperatures.

Hard Packed Snow

All models covered in this guide which are equipped with a minimum track profile of 44 mm (1.75 in) are built for deep snow conditions and should never be used during a prolonged period of time in marginal or hard packed snow conditions.

In the event you have to ride in these types of conditions:

- Avoid exceeding a speed of 70 km/h (45 mph) in all conditions
- Avoid hard acceleration (over 75% of throttle)
- Ice scratchers should be applied
- Engine temperature should not exceed 75% on the temperature gauge.

NOTICE

Running these types of tracks at high speed on a trail, on hard packed surfaces or on ice puts more stress on the lugs, which tends to heat up as a result. It also could drastically reduce the life of specific wear parts. To avoid potential degradation, delamination or damages to the track and wear parts, reduce your speed and minimize the distance that is being ridden on these types of surfaces.

Vehicles Equipped with Ice Scratchers

Ice scratchers are equipped on the vehicle to increase engine cooling efficiency, to lubricate and to cool track clips and sliders. They must be used whenever on ice, hard packed snow, or any conditions that do not lift enough snow particles into the rear suspension and the tunnel.

NOTICE

Although it is not recommended to ride a snowmobile equipped with a high lug profile track on trails or hard packed snow conditions, it is highly suggested to combine idler wheels and ice scratchers on a vehicle used in these conditions.

IMPORTANT

Ridding in these trail conditions puts the reliability of the track and its warranty at risk

If equipped with the following track profile heights, never exceed the recommended sustained vehicle speeds listed.

Track Profile Height	Maximum Sustained Speed
57 mm (2.25 in) 60 mm (2.36 in)	110 km/h (70 MPH)
64 mm (2.52 in) 75 mm (3 in)	95 km/h (60 MPH)

TUNE YOUR RIDE

Snowmobile handling and comfort depend upon multiple adjustments.

⚠ WARNING

Suspension adjustment could affect vehicle handling. Always take time to familiarize yourself with the vehicle's behavior after any suspension adjustment have been made. Always adjust LH and RH suspension components to the same setting.

Choice of suspension adjustments vary with carrying load, operator's weight, personal preference, riding speed and field condition.

NOTE:
Some adjustments may not apply to your snowmobile.

⚠ WARNING

Before proceeding with any suspension adjustment, remember:

- **Park in a safe place.**
- **Remove the tether cord cap from the engine cut-off switch.**
- **Use appropriate lifting device or have assistance to share lifting stress. If a lifting device is not used, use proper lifting techniques, notably using your legs force.**
- **Do not attempt to lift the front or rear of vehicle if it is above your limits.**
- **Support front of vehicle off the ground with a suitable device before adjusting suspension.**
- **Support rear of vehicle off the ground with a wide-base snowmobile stand with a rear deflector panel.**
- **Make sure support device is stable and secure.**

The best way to set up the suspension is to customize each adjustment one at a time. Various adjustments are interrelated. It may be necessary to readjust center spring after adjusting front springs for instance. Test run the snowmobile under the same conditions; trail, speed, snow, operator riding position, etc. Proceed methodically until you are satisfied.

Following are guidelines to fine-tune suspension. Use suspension adjustment tool provided in the tool kit.

Front Suspension Adjustments

Ski Stance

Skis can be set to three different widths.

To obtain the different widths, place the spacers:

– Inside the skis leg (narrowest ski stance setting: easiest to initiate turn on sidehills), or
– Outside the skis leg (widest ski stance setting: most stable on corners), or
– On each side (central setting: best steering accuracy on deep snow).

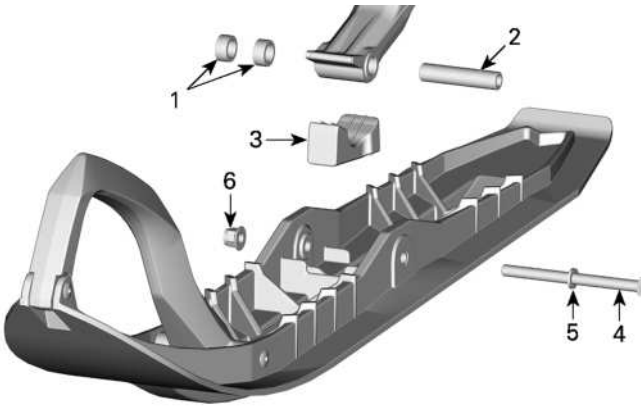

LH SIDE SHOWN

1. *Spacers*
2. *Axle*
3. *Stopper*
4. *Screw*
5. *Washer*
6. *Nut*

TIGHTENING TORQUE	
Ski nut	48 ± 6 Nm (35 ± 4 lbf-ft)

Front Springs

Front spring preload has an effect on front suspension firmness.

Front spring preload also has an effect on the steering behavior.

Action	Result
Increasing preload	Firmer front suspension
	Higher front end
	More precise steering
	More bump absorption capability
Decreasing preload	Softer front suspension
	Lower front end
	Lighter steering
	Less bump absorption capability

⚠ WARNING

Adjust both springs to the same preload. Uneven adjustment can cause poor handling and loss of stability, and/or control, and increase the risk of an accident.

Cam Type Adjuster

Using the suspension adjustment tool provided in the tool kit, turn the cam to increase or decrease the spring preload.

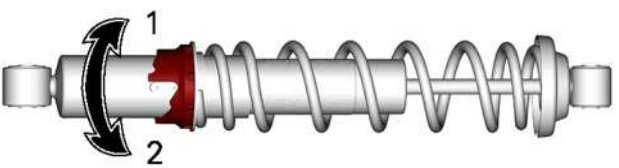

1. *Increase preload*
2. *Decrease preload*

Ring Adjuster – Type 1

Grab and turn the ring and the spring to increase or decrease the spring preload.

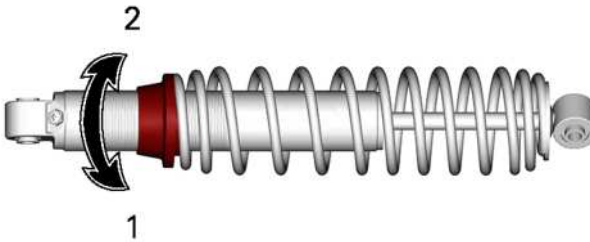

1. *Increase preload*
2. *Decrease preload*

Ring Adjuster – Type 2

Grab and turn the ring and the spring to increase or decrease the spring preload.

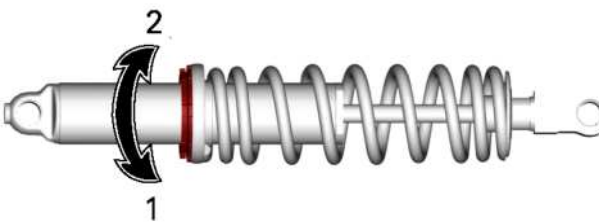

1. *Increase preload*
2. *Decrease preload*

Front Shock Compression Damping (if equipped)

NOTE:
Both low and high speed compression damping are adjusted simultaneously.

Low speed compression damping controls how the shock absorber reacts to a low suspension velocity (slow compression strokes, in most cases when riding at lower speeds).

High speed compression damping controls how the shock absorber reacts to a high suspension velocity (quick compression strokes, in most cases when riding at higher speeds).

To adjust, turn the adjuster button located on the reservoir.

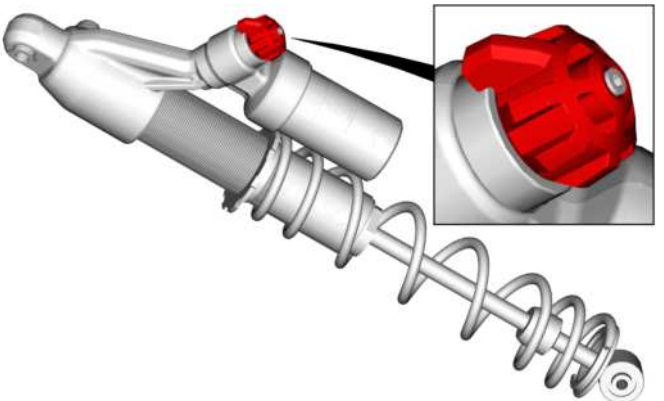

3 POSITIONS COMPRESSION DAMPING ADJUSTER BUTTON

Turning	Action	Result on big and small bumps
Clockwise	Increasing compression damping force	Firmer compression damping
Counter Clockwise	Decreasing compression damping force	Softer compression damping

Rear Suspension Adjustments

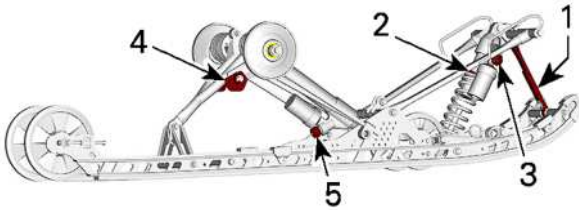

TMOTION ADJUSTABLE COMPONENTS

1. *Stopper strap*
2. *Center spring*
3. *Center shock absorber*
4. *Rear spring*
5. *Rear shock absorber*

NOTICE

Whenever adjusting rear suspension, check track tension and adjust if necessary.

Stopper Strap

Stopper strap length has an effect on the amount of weight the center spring has to carry especially during acceleration, therefore on the front end uplift.

Stopper strap length also has an effect on center spring travel.

When operating the snowmobile in deep snow or hill climbing, it may be necessary to vary stopper strap length and/or riding position, to change the angle at which the track rides on the snow. Operator's familiarity with the various adjustments as well as snow conditions will dictate the most efficient combination.

Generally, a longer stopper strap setting gives better performance in deep snow on a flat landscape and a shorter setting will improve handling in steep hill climbing conditions.

Stopper Strap Setting (without quick adjust)	
Position	**Use**
1	Do Not Use
2	Longest strap position for optimal bump absorption
3	Boon docking: – Better boon docking manoeuvrability – Better bump absorption – Better deep snow starts (forward and reverse)
4	Factory setting - Sea level calibration: – Best overall setting (general use)
5	Hill climb: – Better track attack angle for hill climbing
6	Factory setting - High altitude calibration: – Best track attack angle for hill climbing – Less transfer – Lower ride height

NOTE:
Stopper strap could be set to position 3, 4, 5 and 6. Below are illustrations for position 4 and 6. Smaller numbers correspond to a longer strap setting.

NOTICE
Do NOT set to a position lower than 3. It could lead to center shock damage.

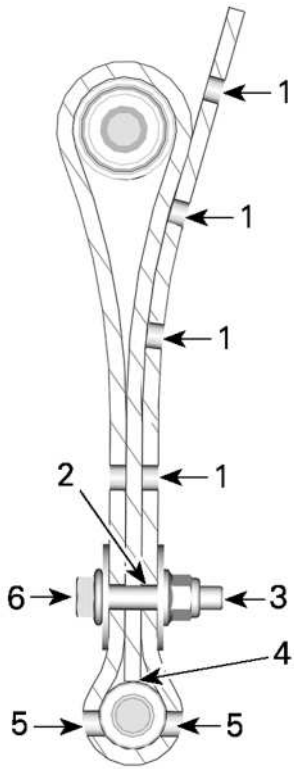

STOPPER STRAP POSITION 4 (4TH HOLE, FACTORY SETTINGS)

1. *Free holes*
2. *4th hole from end*
3. *Towards rear*
4. *Tip of strap touching strap axis*
5. *Two holes left open between screw head and nut*
6. *Towards front*

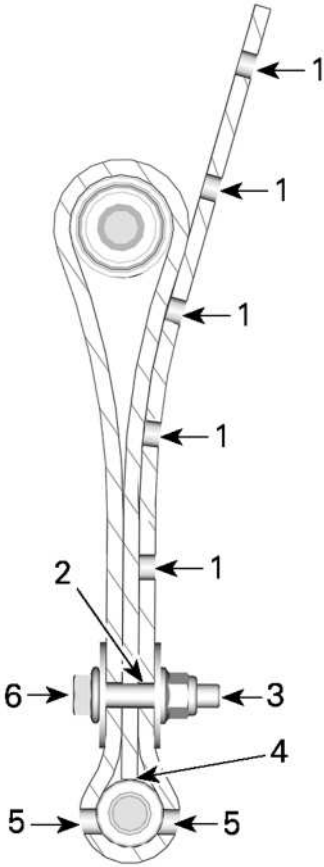

STOPPER STRAP POSITION 6 (6TH HOLE)

1. *Free holes*
2. *6th hole from end*
3. *Towards rear*
4. *Tip of strap touching strap axis*
5. *Two holes left open between screw head and nut*
6. *Towards front*

Quick Adjust Stopper Strap System

On models equipped with an adjustable stopper strap, the lever position can be changed at any time, with the vehicle completely stopped. The crank mechanism will switch position when tension on strap is released, i.e. when front portion of suspension is slightly compressed.

PRECISION+ to AGILE	
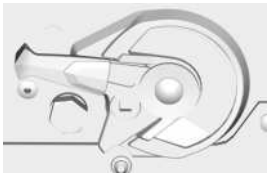	

From factory, the adjustable stopper strap is set in the way where the "AGILE" position = setting #4 on regular stopper strap. The "PRECISION+" position = setting #7 on the regular stopper strap.

The adjustable stopper strap length setting can be adjust by changing the bolts to the long position holes. Refer to the following illustration. Then, the "AGILE" position will = setting #3 and the "PRECISION+" position = setting #6.

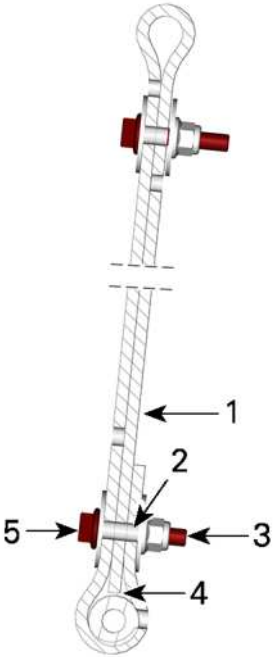

ADJUSTABLE STOPPER STRAP LONG LENGTH SETTING (1ST HOLE)

1. *NO Free hole*
2. *1 hole to the end*
3. *Towards rear*
4. *Tip of strap touching strap axis*
5. *Towards front*

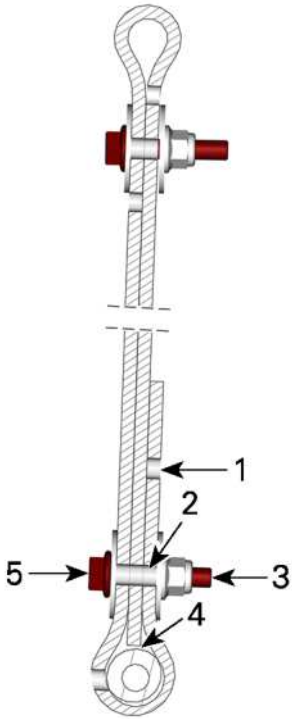

ADJUSTABLE STOPPER STRAP SHORT LENGTH SETTING (2ND HOLE)

1. *1 Free hole*
2. *2 hole from end*
3. *Towards rear*
4. *Tip of strap touching strap axis*
5. *Towards front*

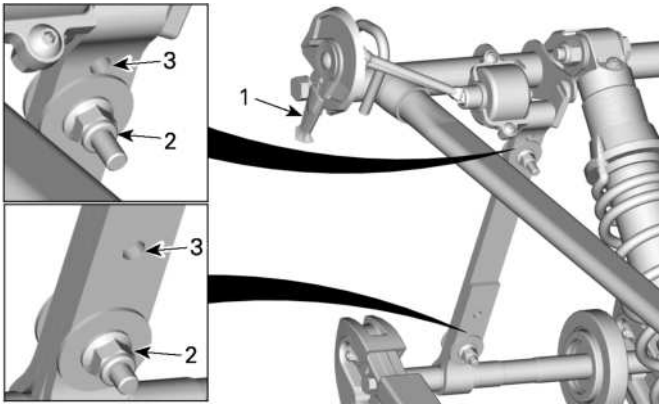

ADJUSTABLE STOPPER STRAP LENGTH SETTING

1. *Handle*
2. *Short position (Position 4 to 7) (factory setting)*
3. *Long position (Position 3 to 6)*

Always install the stopper strap bolt as close as possible to the lower shaft.

When operating the snowmobile in deep snow, it may be necessary to vary stopper strap length and/or riding position, to change the angle at which the track rides on the snow. Operator's familiarity with the various adjustments as well as snow conditions will dictate the most efficient combination.

Generally, a longer stopper strap setting gives better performance in deep snow on a flat landscape.

Center Spring

Center spring preload has an effect on steering effort, handling and bump absorption.

Also, since center spring preload adjustment puts more or less pressure on the front of the track, it has an effect on the performance in deep snow.

Action	Result
Increasing preload	Lighter steering

Action	Result
	More bump absorption capability
	Better deep snow starts
	Better deep snow performance and handling
Decreasing preload	Heavier steering
	Less bump absorption capability
	Better trail handling

Cam Type Adjuster

Using the suspension adjustment tool provided in the tool kit, turn the cam to increase or decrease the spring preload.

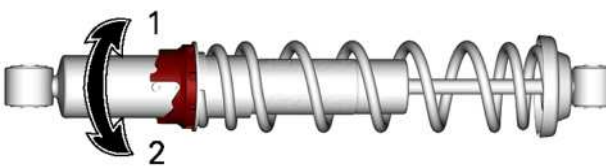

1. *Increase preload*
2. *Decrease preload*

Ring Type Adjuster

Grab and turn the ring and the spring to increase or decrease the spring preload.

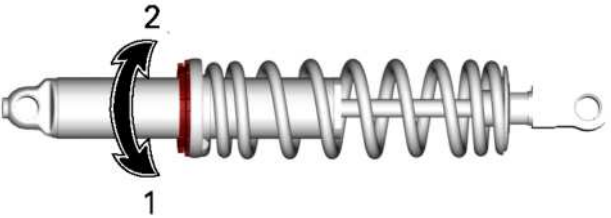

1. *Increase preload*
2. *Decrease preload*

Rear Springs

Rear spring preload has an effect on comfort, ride height and load compensation.

Also, adjusting rear spring preload shifts more or less weight to the snowmobile front end. As a result, more or less weight is applied to the skis. This has an effect on performance in deep snow, steering effort and handling.

Slight suspension bottoming occurring under the worst riding conditions indicates a good choice of spring preload.

Action	Result
Increasing preload	Firmer rear suspension
	Higher rear end
	More bump absorption capability
	Heavier steering
Decreasing preload	Softer rear suspension
	Lower rear end
	Less bump absorption capability
	Lighter steering
	Better deep snow performance and handling

Refer to the following to determine if preload is correct.

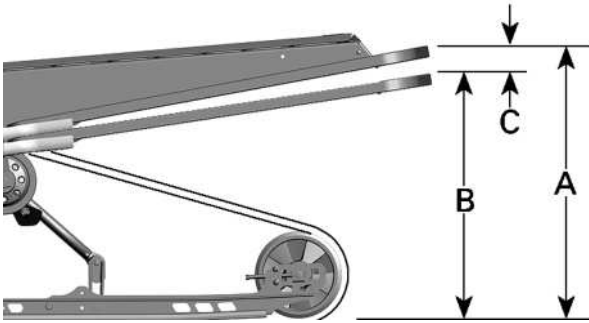

TYPICAL - PROPER ADJUSTMENT

- A = Suspension fully extended
- B = Suspension has collapsed with operator, passenger and load added
- C = Distance between dimension “A” and “B”, see table below

”C”	What to do
65 to 100 mm (2.5 to 4 in)	No adjustment required
More than 100 mm (4 in)	Adjusted too soft. Increase preload
Less than 65 mm (2.5 in)	Adjusted too firm. Decrease preload

If the specification is unattainable with the original springs, see an authorized BRP snowmobile dealer for other available springs.

To increase spring preload, using tool, always turn the left side adjustment cam in a clockwise direction, and the right side cam in a counterclockwise direction.

⚠ CAUTION
Never set preload cams directly from position 5 to 1 or directly from position 1 to 5.

⚠ WARNING

Both rear spring preload must be set at the same position. Otherwise vehicle behavior may be unpredictable, and suspension may become warped.

The adjustment cams have 5 different settings, 1 being the softest.

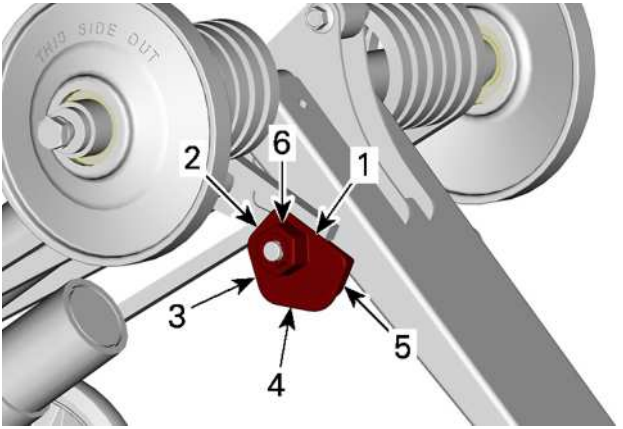

TYPICAL - LH SIDE SHOWN

1. *Position 1*
2. *Position 2*
3. *Position 3*
4. *Position 4*
5. *Position 5*
6. *Adjustment nut*

Center and Rear Shock Compression Damping (if equipped)

NOTE:
Both low and high speed compression damping are adjusted simultaneously.

Low speed compression damping controls how the shock absorber reacts to a low suspension velocity (slow compression strokes, in most cases when riding at lower speeds).

High speed compression damping controls how the shock absorber reacts to a high suspension velocity (quick compression strokes, in most cases when riding at higher speeds).

To adjust, turn the adjuster button located on the reservoir.

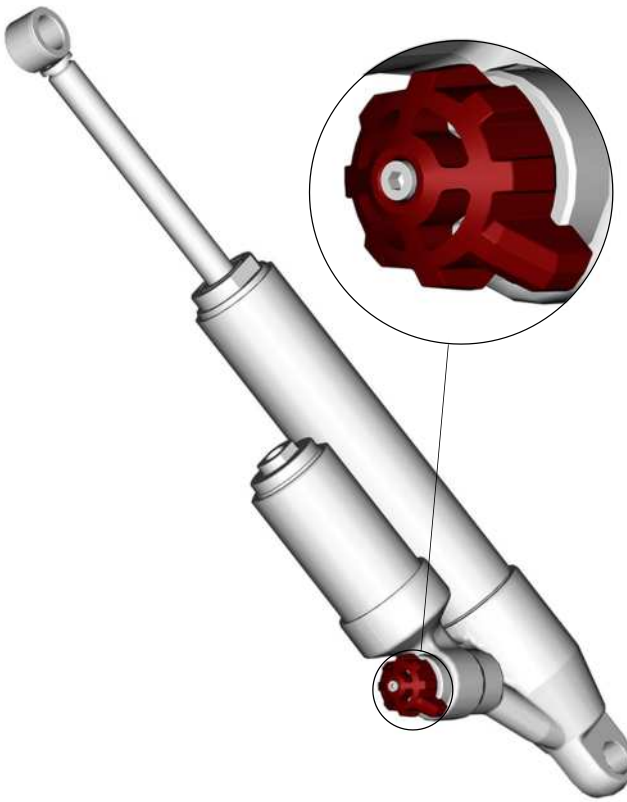

3 POSITIONS COMPRESSION DAMPING ADJUSTER BUTTON

Turning	Action	Result on big and small bumps
Clockwise	Increasing compression damping force	Firmer compression damping
Counter Clockwise	Decreasing compression damping force	Softer compression damping

Adjustment Tips According to Vehicle Behavior

Problem	Corrective measures
Front suspension darting	Check ski alignment. – Reduce front suspension spring preload. – Increase center spring preload. – Reduce rear spring preload.
Steering feels too heavy at steady speeds	– Reduce front suspension spring preload. – Increase center spring preload.
Steering feels too heavy during acceleration	– Set coupling blocks to a lower position (if equipped). – Reduce rear spring preload. – Lengthen limiter strap.
Too much ski lift during cornering or acceleration	– Set coupling blocks to a higher position (if equipped). – Shorten limiter strap. – Increase rear spring preload.
Rear of snowmobile seems too stiff	– Reduce rear spring preload. – Reduce compression damping adjustment if equipped
Rear of snowmobile seems too soft	– Increase rear spring preload.

Problem	Corrective measures
Rear suspension is frequently bottoming	– Increase compression damping adjustment if equipped. – Increase rear spring preload. – Increase center spring preload. – Lengthen limiter strap.
Snowmobile seems to pivot around its center	– Reduce center spring preload. – Increase rear spring preload. – Increase front suspension spring preload. – Shorten limiter strap.
Track spins too much at start	– Set coupling blocks to a lower position (if equipped). – Lengthen limiter strap.

This page is intentionally blank

MAINTENANCE

MAINTENANCE SCHEDULE

Maintenance is very important to keep your vehicle in safe operating condition. The vehicle should be serviced as per the maintenance schedule.

Proper maintenance is the owner's responsibility. A warranty claim may be denied if, among other things, the owner or operator caused the problem through improper maintenance or use.

Perform periodic checks and follow the maintenance schedule. **The maintenance schedule does not exempt the pre-ride inspection**.

⚠ WARNING

Failure to properly maintain the vehicle according to the maintenance schedule and procedures can make it unsafe to operate.

EPA Regulation - Canadian and USA Vehicles

A repair shop or person of the owner's choosing may maintain, replace, or repair emission control devices and systems. These instructions do not require components or service by BRP or authorized BRP snowmobile dealers.

Although an authorized BRP snowmobile dealer has an in-depth technical knowledge and tools to service your vehicle, the emission-related warranty is not conditioned on the use of an authorized BRP snowmobile dealer or any other establishment with which BRP has a commercial relationship.

Proper maintenance is the owner's responsibility. A warranty claim may be denied if, among other things, the owner or operator caused the problem through improper maintenance or use.

For emission-related warranty claims, BRP is limiting the diagnosis and repair of emission-related parts to the authorized BRP snowmobile dealers. For more information, please refer to the *US EPA Emissions PERFORMANCE WARRANTY* contained in the *warranty* section.

You must follow the instructions for fuel requirements in the fueling section of this manual. Even if gasoline containing greater than ten volume percent ethanol is readily available, the US EPA issued a prohibition against the use of gasoline containing greater than 10 vol% ethanol that applies to this vehicle. The use of gasoline containing greater than 10 vol% ethanol with this engine may harm the emission control system.

Deep Snow Usage

Deep Snow usage requires maintenance tasks to be performed between the regular yearly intervals. These are identified as A+ in the chart below.

If you regularly ride **deep snow and perform frequent hill climbs**, follow the A+ Deep Snow interval and perform the tasks outlined in the chart below.

Maintenance Schedule

Make sure to perform proper maintenance at recommended intervals as indicated in the tables.

The maintenance chart indicates the items needing to be addressed based on 2 criteria, whichever happens first:

– Calendar time
– Odometer reading.

Your driving habits determines the factors you shall adhere too. For example:

– Someone who uses their vehicle every weekend would most likely follow the **odometer reading** to determine the frequency of his maintenance.
– Someone who uses their vehicle seldomly over the year or only on a few occasions would follow the **calendar time** to determine the frequency of his maintenance.

IMPORTANT: The following tables show the appropriate maintenance application for the first 2 years. For subsequent years, repeat the same pattern alternatively.

Maintenance Overview		
Calendar Time	Odometer	Deep Snow
Every Month	1500 km (1000 mi)	**A+**
1 Year	3000 km (2000 mi)	**A**
Every Month	4500 km (3000 mi)	**A+**
2 Years	6000 km (4000 mi)	**A** and **B**

E-TEC Engines

DEEP SNOW	A+	A	B
A = Adjust C = Clean I = Inspect L = Lubricate R = Replace T = Torque	**Every month or 1500 km (1000 mi)**	**Every year or 3000 km (2000 mi)**	**Every 2 years or 6000 km (4000 mi)**
Air and Fuel Delivery			
Fuel components (fuel cap, hoses, clamps and tank fixation) and function		**I**	
In-line fuel filter		**R** Every 5 years	
Body and Chassis			
Body panels and hardware		**I, T**	
Pivots, latches, hinges and key barrels		**L**	
Engine and Cooling			
Engine cooling components (coolant concentration, coolant level, hose condition, clamps, leaks)		**I, A**	
Engine rubber mounts			**I**
Rewind starter (manual start models)			**C, L**
Spark plugs – Except Turbo R		**R** Every 3 years or	

DEEP SNOW	A+	A	B
A = Adjust **C = Clean** **I = Inspect** **L = Lubricate** **R = Replace** **T = Torque**	**Every month or 1500 km (1000 mi)**	**Every year or 3000 km (2000 mi)**	**Every 2 years or 6000 km (4000 mi)**
		10 000 km (6000 mi)	
Spark plugs – Turbo R		**R** Every 100 hours or 3000 km (2000 mi)	
Oil injection pump strainer		**I, C** Every 3 years or 10 000 km (6000 mi)	
RAVE valves		**I, C** Every 3 years or 10 000 km (6000 mi)	
Engine coolant		**R** Every 5 years	
Exhaust and Emissions			

DEEP SNOW	A+	A	B
A = Adjust **C = Clean** **I = Inspect** **L = Lubricate** **R = Replace** **T = Torque**	**Every month or 1500 km (1000 mi)**	**Every year or 3000 km (2000 mi)**	**Every 2 years or 6000 km (4000 mi)**
Exhaust components (gaskets, pipes, muffler condition, leaks)		**I**	
Exhaust manifold		**T**	
Brake			
Brake components and function		**I, L**	
Brake fluid			**R** Every 2 years
Drive			
Chaincase drive chain tension	**A** After the first 75 km (50 mi) then every 500 km (300 mi)	**A**	
Chaincase drive chain and tensioner		**I**	
Chaincase oil		**R**	
Track alignment and tension	**A** After the first 75 km (50 mi) then every	**I, A**	

DEEP SNOW	A+	A	B
A = Adjust **C = Clean** **I = Inspect** **L = Lubricate** **R = Replace** **T = Torque**	**Every month or 1500 km (1000 mi)**	**Every year or 3000 km (2000 mi)**	**Every 2 years or 6000 km (4000 mi)**
	500 km (300 mi), up to then every 1500 km (1000 mi)		
Continuously Variable Transmission (CVT)			
CVT components and function		**I, C, L**	
CVT drive belt condition	**I**		
CVT drive belt tension	**A**	**A**	
Drive pulley retaining screw		**T**	
Electrical			
Battery connections and condition		**I**	
Electrical harness routing		**I**	
Headlight aim		**A**	
Modules and applicable software updates		**I**	
Operation of control switches and lighting		**I**	
Steering and Controls			

DEEP SNOW	A+	A	B
A = Adjust **C = Clean** **I = Inspect** **L = Lubricate** **R = Replace** **T = Torque**	**Every month or 1500 km (1000 mi)**	**Every year or 3000 km (2000 mi)**	**Every 2 years or 6000 km (4000 mi)**
Ski runners		**I**	
Gearbox position lever operation		**I, A**	
Steering alignment		**I, A**	
Steering components and function		**I**	
Throttle cable		**A**	
Throttle operation		**I**	
Suspension			
Suspension components and function		**I, L**	

MAINTENANCE PROCEDURES

This section includes instructions for basic maintenance procedures.

⚠ WARNING

Turn off the engine, remove tether cord cap and follow these maintenance procedures when performing maintenance. If you do not follow proper maintenance procedures you can be injured by hot parts, moving parts, electricity, chemicals or other hazards.

⚠ WARNING

Should removal of a locking device be required (e.g. lock tabs, self-locking fasteners, etc.) when undergoing disassembly/assembly, always replace with a new one.

Engine Coolant

⚠ WARNING

Never open coolant tank cap when engine is hot.

Verifying the Engine Coolant Level

1. Remove access panel.

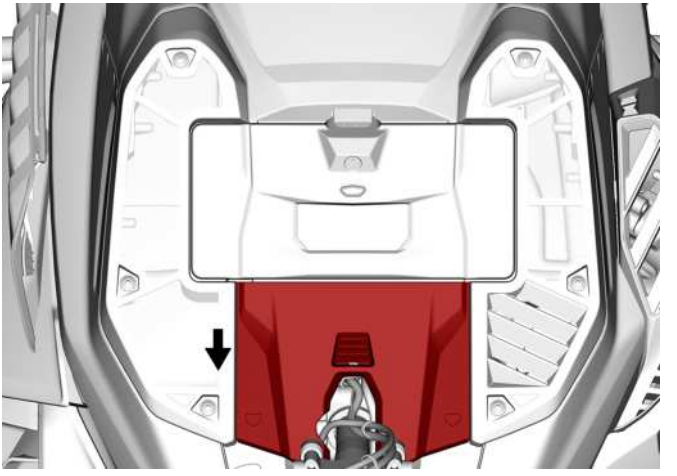

2. Check coolant level at room temperature. Liquid should touch the flat surface of the eyesight.

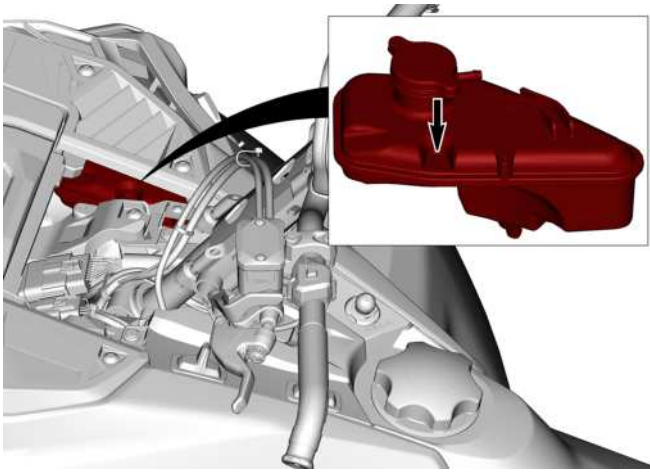

3. Add coolant if required.

NOTE:
When checking level at low temperature it may be slightly lower than the mark.

4. Remove the following fasteners then the RH air filter.

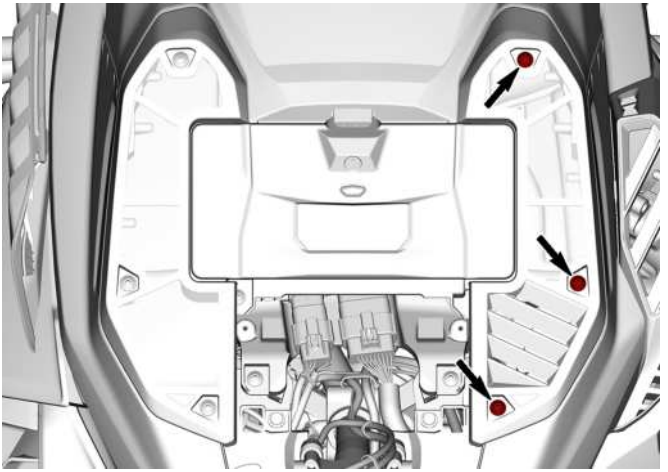

5. Add coolant by the filler neck.

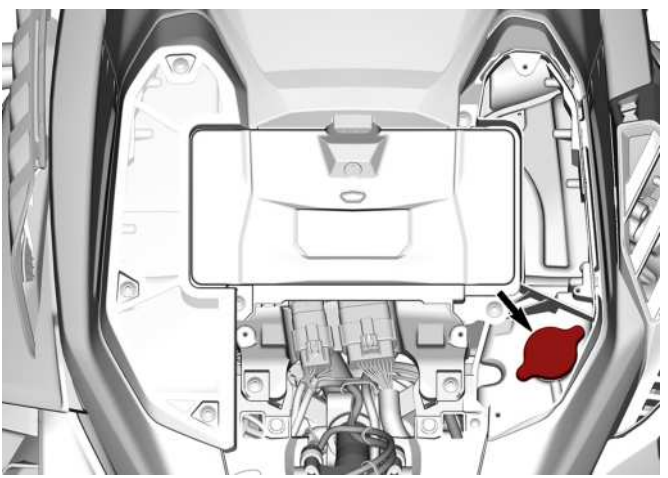

6. If coolant level keeps dropping during or after each ride or if entire system has to be refilled, refer to an authorized BRP snowmobile dealer, repair shop or person of your own choosing for servicing.

Recommended Engine Coolant

RECOMMENDED COOLANT
XPS Extended life pre-mixed coolant
IF THE RECOMMENDED XPS COOLANT IS NOT AVAILABLE
Distilled water and antifreeze solution (50% distilled water, 50% antifreeze)

NOTICE

Always use ethylene-glycol antifreeze containing corrosion inhibitors specifically for internal combustion aluminum engines.

Exhaust System

Exhaust System Verification

The muffler tail pipe should be centered with the exit hole in the bottom pan. Exhaust system must be free of rust or leaks. Make sure that all parts are securely in place.

Check retaining springs and heat shields condition and replace if necessary.

The exhaust system is designed to reduce noise and to improve the total performance of the engine. Modification may be in violation of local laws.

NOTICE

If any exhaust system component is removed, modified or damaged, severe engine damage may result.

Spark Plugs

Spark plugs inspection or replacement may be performed by an authorized BRP snowmobile dealer, repair shop, or person of your own choosing. Spark plugs inspection or replacement requires an in-depth technical knowledge. Though not required, it is recommended that an authorized BRP snowmobile dealer performs spark plugs inspection or replacement.

Brake Fluid

Verifying the Brake Fluid Level

NOTICE

Vehicle must be on a level surface before checking any fluid levels.

1. Position the handlebar in the straight-ahead position to ensure the reservoir is level.
2. Check brake fluid in the reservoir for proper level.

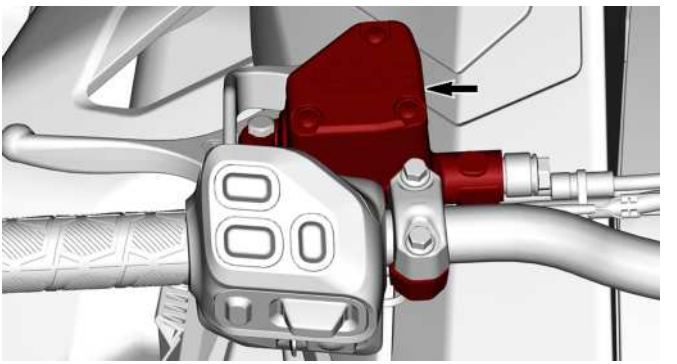

TYPICAL

Brake fluid must always be above the bottom of the window when brake lever is squeezed.

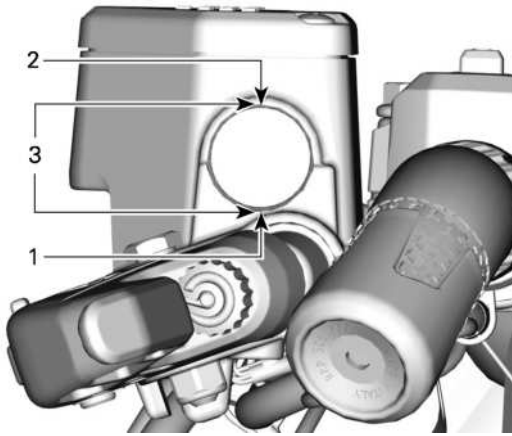

TYPICAL

1. *Minimum*
2. *Maximum*
3. *Operating range*

If brake fluid level keeps dropping during or after each ride, or if entire system has to be refilled, refer to an authorized BRP dealer, repair shop, or a person of your own choosing for servicing.

Adding Brake Fluid

NOTICE

Vehicle must be on a level surface before checking any fluid levels.

1. Clean the reservoir cap.

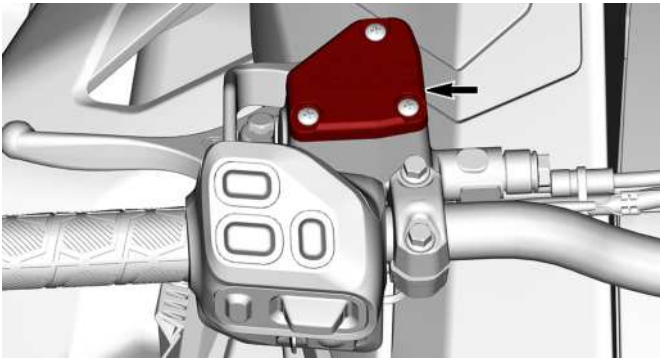

2. Remove the screws retaining the reservoir cap.

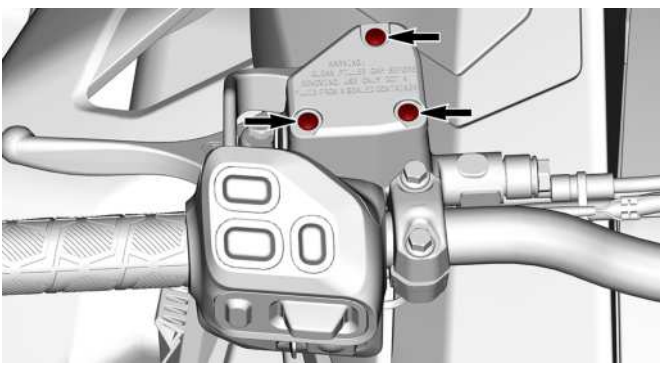

3. Remove the reservoir cap.
4. Add fluid as required. Do not overfill. Use only the recommended brake fluid. Refer to *Recommended Brake Fluid* in this subsection.

⚠ CAUTION

Avoid getting brake fluid on skin or eyes - it may cause severe burns. In case of contact with the skin, wash thoroughly. In case of contact with the eyes, immediately rinse with plenty of water for at least 10 minutes and then consult a doctor immediately.

NOTICE

- **Brake fluid can damage paint, rubber and plastic parts**
- **Protect these nearby parts with a rag when servicing the brake system**
- **Rinse thoroughly in case of spillage.**

5. Ensure the diaphragm is pushed in the reservoir cap before installing the cap one the reservoir.

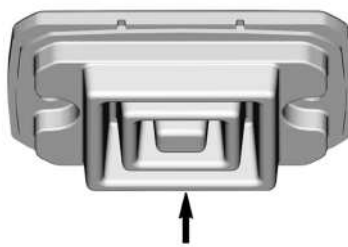

6. Reinstall reservoir cap and screws. Tighten to specification.

Tightening Torque	
Reservoir cap screws	0.7 ± 0.1 Nm (6 ± 1 lbf-in)

Recommended Brake Fluid

Recommended Brake Fluid
XPS DOT 4 Brake Fluid
Alternative or if not available
DOT 4 Brake Fluid

Use only DOT 4 brake fluid from a sealed container. An opened container may be contaminated or may have absorbed moisture from the air.

⚠ WARNING

Use only DOT 4 brake fluid from a sealed container. To avoid serious damage to the braking system, do not use fluids other than the recommended one, nor mix different fluids for topping up.

Chaincase Oil

Recommended Chaincase Oil

Recommended Chaincase Oil
XPS Synthetic chaincase oil
Alternative or if not available
75W140 gear oil that meets the API GL-5 specification

NOTICE

If the recommended XPS chaincase oil is not available, use a 75W140 gear oil that meets the API GL-5 specification. The chaincase of this snowmobile has been developed and validated using the XPS™ Synthetic chaincase oil. BRP strongly recommends the use of its XPS Synthetic chaincase oil at all times. Damages caused by oil which is not suitable for the chaincase will not be covered by the BRP limited warranty.

Verifying the Chaincase Oil Level

With the vehicle on a level surface, check the oil level by removing the check plug.

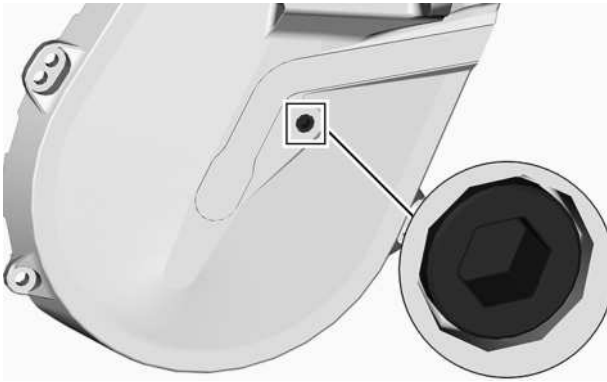

CHECK PLUG

Oil level must reach the threaded hole.

If level is correct, reinstall check plug and tighten to the specified torque.

Tightening Torque	
Check plug	6 ± 1 Nm (53 ± 9 lbf-in)

If level is insufficient, refer to *Chaincase Filling Procedure*.

Replacing the Chaincase Oil

Draining the Chaincase Oil

1. Place the vehicle on a level surface.
2. Place a drain pan under the chaincase drain plug area.
3. Remove filler cap.
4. Remove the drain plug located at the bottom of the chaincase.

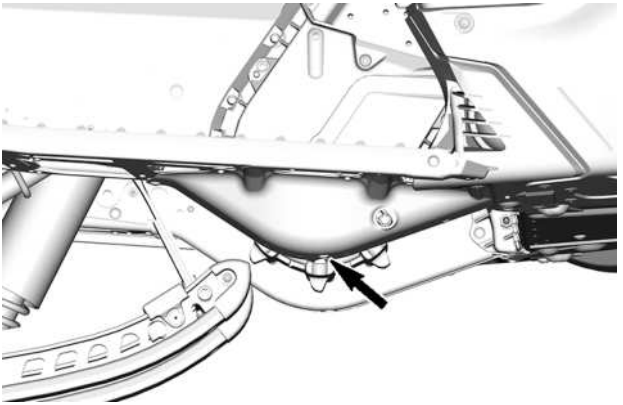

TYPICAL

5. Wait a while to allow all oil to drain out of the chaincase.
6. Install drain plug and tighten to specification.

Tightening Torque	
Chaincase drain plug	6 ± 1 Nm (53 ± 9 lbf-in)

Filling the Chaincase

1. Open the RH side panel. Refer to *Equipment*.
2. Remove the check plug.

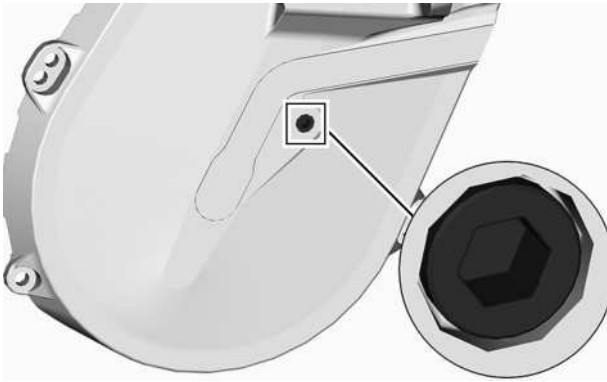

CHECK PLUG

3. Remove the filler cap.

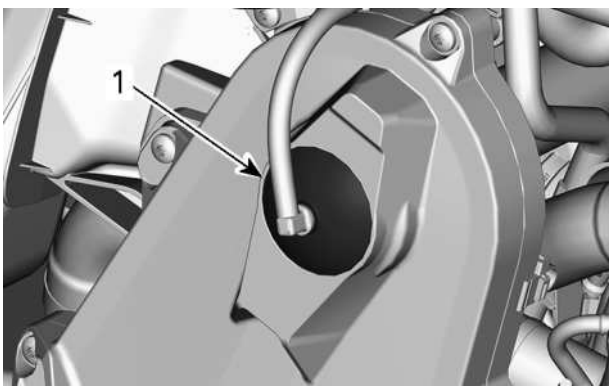

TYPICAL - TOP OF CHAINCASE

1. Filler cap

4. Pour recommended oil in the filler hole until oil comes out by the check plug hole.
5. Reinstall check plug and tighten to specification.

Tightening Torque	
Check plug	6 ± 1 Nm (53 ± 9 lbf-in)

Reinstall the filler cap.

Drive Chain

Access to Chaincase

Open RH side panel, refer to *Equipment*.

Drive Chain Adjustment

Using the Torx end of the driven pulley expander, GENTLY turn tensioner clockwise to eliminate the play.

NOTE: Make sure the play is completely eliminated by trying to turn back and forth the driven pulley.

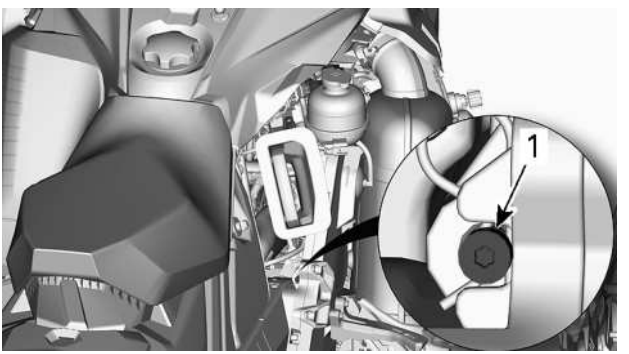

TYPICAL

Do not force the tensioner in.

NOTE:
Do not remove the hair cotter pin.

NOTICE

Overtightening the drive chain could result in severe damage to the chaincase components.

Drive Belt

Drive Belt Inspection

Remove the drive belt guard. Refer to the procedure in *Equipment*.

Inspect belt for cracks, fraying or abnormal wear (uneven wear, wear on one side, missing cogs, cracked fabric). If abnormal wear is noted, probable cause could be pulley misalignment, excessive RPM with frozen track, fast starts without warm-up period, burred or rusty sheave, oil on belt or distorted spare belt. Contact an authorized BRP snowmobile dealer.

Replacing the Drive Belt

Removing the Drive Belt

1. Remove the tether cord cap from engine cut-off switch.
2. Remove the LH side panel.
3. Remove the drive belt guard. Refer to *Removing the Drive Belt Guard*.
4. Insert the driven pulley expander provided, in the threaded hole on the adjuster hub as shown.

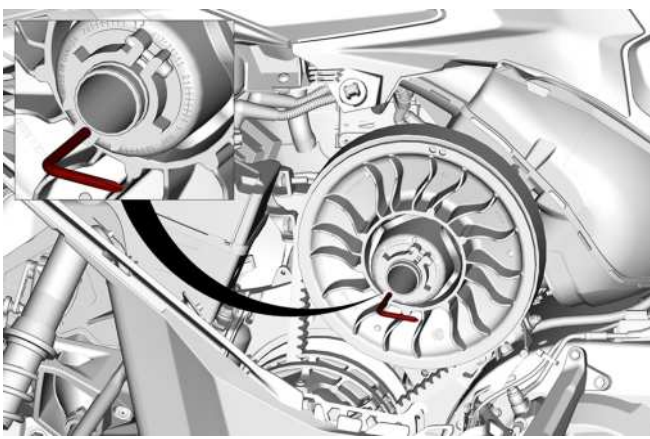

TYPICAL - PULLEY EXPANDER INSTALLED ON ADJUSTER HUB

5. Open the driven pulley by screwing the tool in.
6. Remove the drive belt by slipping it over the edge of the driven pulley, then over the drive pulley.

Installing the Drive Belt

The driven pulley must be expanded. Refer to *Removing the Drive Belt*.

1. Slip the belt over the drive pulley, then over the driven pulley.

NOTICE

Do not force or use tools to pry the belt into place, as this could cut or break the cords in the belt.

NOTE:
The maximum drive belt life span is obtained when belt is installed with arrows in the direction of rotation.

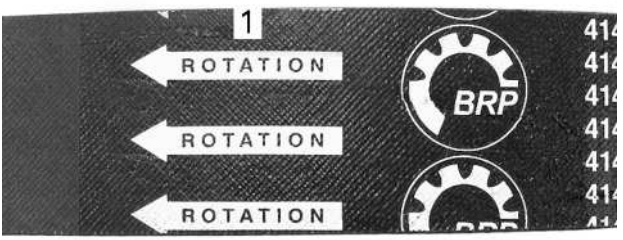

1. *To be pointed in the direction of rotation*

2. Unscrew and remove the driven pulley expander from the pulley.
3. Rotate the driven pulley several times to properly set the belt between the sheaves.
4. If a new belt was installed, an adjustment will be required for the proper belt height. Refer to *Adjusting the Drive Belt Height*.
5. Install belt guard.
6. Close side panel.

Adjusting the Drive Belt Height

Remove the tether cord cap from engine cut-off switch.

Remove the LH side panel.

Remove the drive belt guard.

The drive belt height must be checked every time a new drive belt is installed and as part of the pre-ride inspection.

1. Loosen the clamping screw.

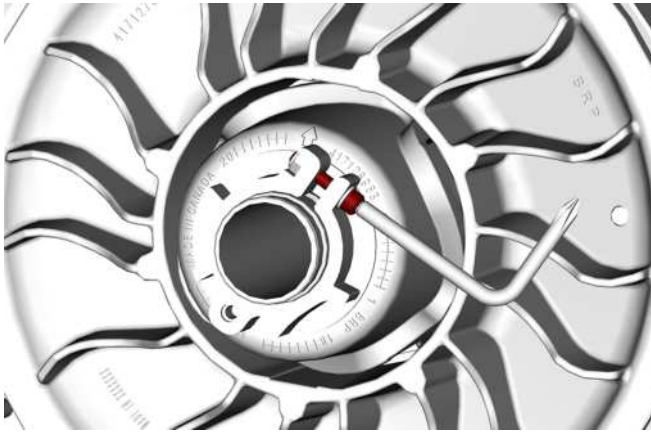

2. Using the suspension adjustment tool provided in the tool kit, turn the adjustment ring 1/4 turn at a time then rotate the driven pulley to properly set the belt between the pulley sheaves.

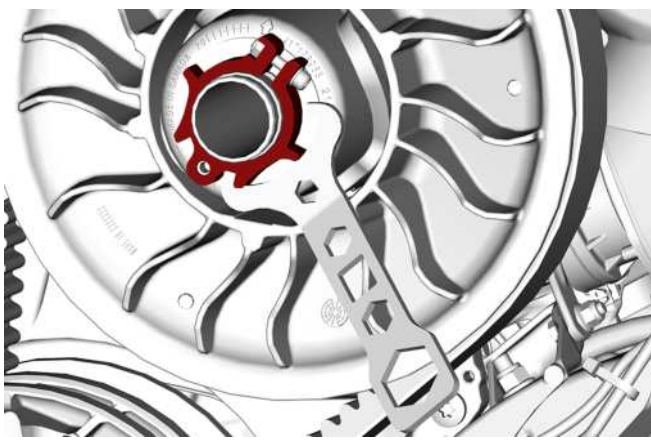

NOTE:
The adjustment ring has left hand treads.

600R E-TEC

Repeat step 4 until the lowest portion of the cogs on the external surface of drive belt is even with the driven pulley edge.

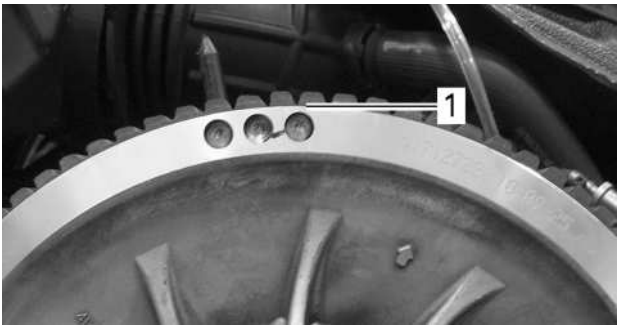

PRELIMINARY SETTING

1. *Lowest portion of cogs even with external surface of drive belt*

850 E-TEC

Repeat step 5 until the cord of drive belt is just hidden by the driven pulley edge.

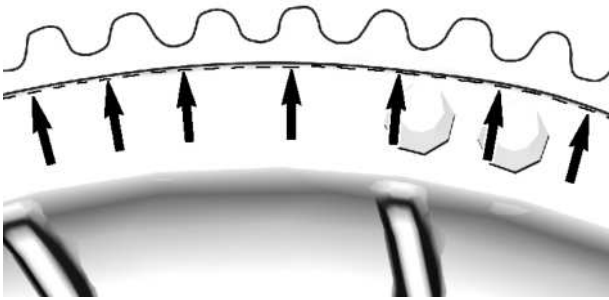

PRELIMINARY SETTING

NOTE:
Turning the adjustment ring counterclockwise lowers the belt in the pulley. Turning the ring clockwise raises the belt in the pulley.

3. Tighten the adjustment ring clamping screw.

Tightening Torque	
Adjustment ring clamping screw	5.5 ± 0.5 Nm (49 ± 4 lbf-in)

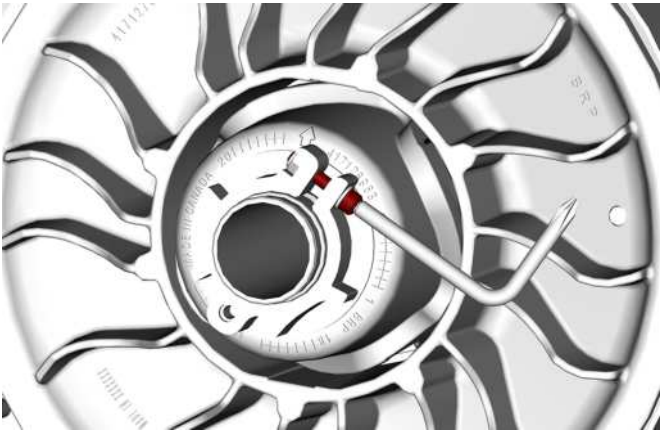

4. Install belt guard, refer to *Installing the Drive Belt Guard*.
5. Install LH side panel.
6. Start engine and check if vehicle creeps.
7. If vehicle does not creep, adjustment is complete.
8. If vehicle creeps, check the drive belt deflection.

Reverse Activation (if equipped)

Reverse may not activate or may be harder to activate if the belt is positioned too high in the driven pulley. If reverse activation does not work properly, ensure the drive belt is properly adjusted.

Adjust the drive belt lower in the driven pulley if needed.

Drive Pulley

Drive Pulley Adjustment (if equipped)

⚠ WARNING

Remove tether cord cap from engine cut-off switch before performing any adjustment. Vehicle must be parked in a safe place, away from the trail.

⚠ WARNING

NEVER disassemble or modify the drive pulley.
Improper assembly or modifications could cause the pulley to explode violently under the stress generated by the high rotational speed.
Visit your BRP snowmobile dealer to maintain or service the drive pulley. Improper servicing or maintenance may affect performance and reduce belt life. Always respect maintenance schedules.

The drive pulley is factory calibrated to transmit maximum engine power at a predefined RPM. Factors such as ambient temperature, altitude or surface condition may vary this critical engine RPM thus affecting snowmobile efficiency.

This adjustable drive pulley allows setting maximum engine RPM to maintain maximum power.

Ramp cams should be adjusted so that actual maximum engine RPM matches the maximum horsepower RPM. Refer to *Technical Specifications (Engine)*.

NOTE:
Use a precision digital tachometer for engine RPM adjustment.

There are 5 positions in which the ramp cam can be set.

Each position modifies the maximum engine RPM by about 200 RPM.

Lower position numbers decrease engine RPM in steps of 200 RPM and higher position numbers increase it in steps of 200 RPM.

Procedure

1. Refer to *Body and Seat* in *Vehicle Information* and remove:
   - LH side panel
   - Drive pulley guard

2. Locate the cam and the pivot screw on the drive pulley.

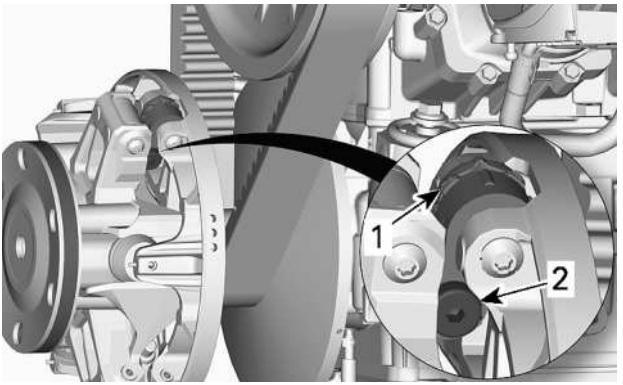

TYPICAL

1. Cam
2. Pivot screw

The cam position is identified as follows:

– Positions 1, 2, 4 and 5 are numbered.
– Position 3 (middle) is identified by a notch.
– There are notches on each side of the cam used as pointers.

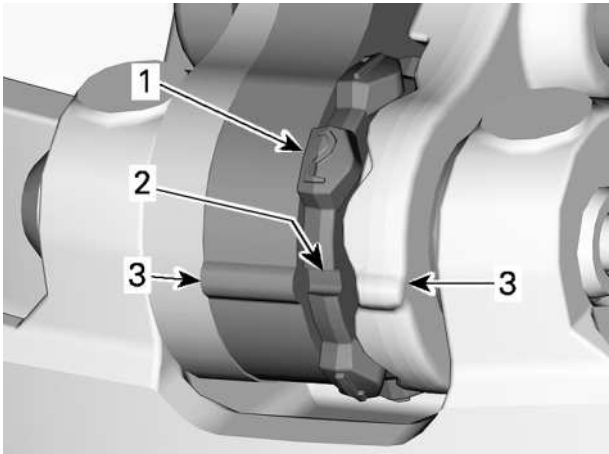

1. *Numbered position*
2. *Position 3 - Notch*
3. *Pointers*

To adjust, proceed as follows for all 3 cams:

3. Using the Allen end of the driven pulley expander, loosen the pivot screw.

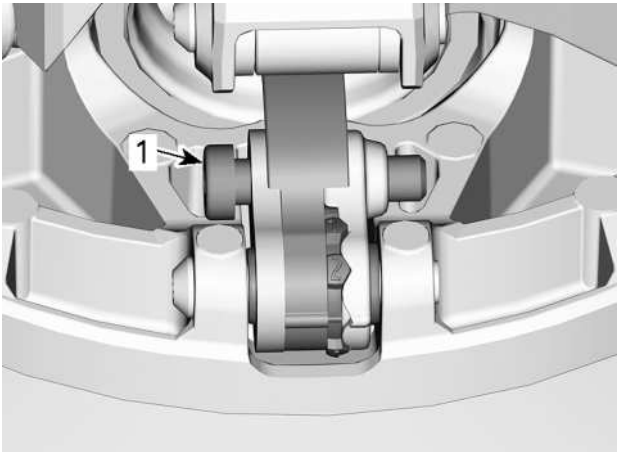

1. Pivot screw

4. Move the right lever aside to be able to turn the cam.
5. Turn cam to the desired position.

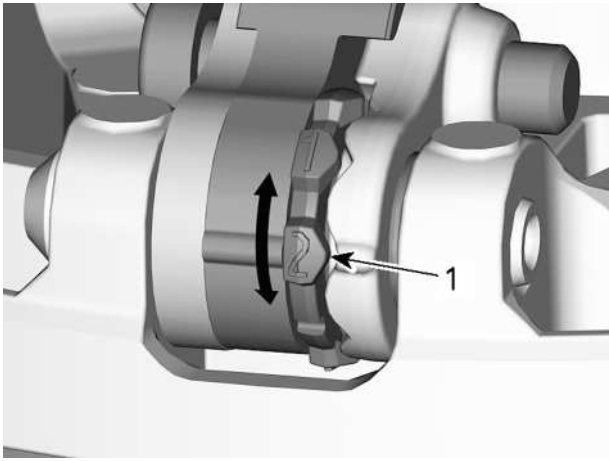

1. Desired cam position (here #2)

6. Tighten the pivot screw.

TIGHTENING TORQUE	
Pivot	8 ± 1 Nm (71 ± 9 lbf-in)

NOTICE

Always adjust all 3 cams to the same setting.

Track

Track Condition

⚠ WARNING

Remove tether cord cap from engine cut-off switch before performing any maintenance or adjustment, unless otherwise specified. Vehicle must be parked in a safe place, away from the trail.

Remove tether cord cap from engine cut-off switch.

Lift the rear of the snowmobile and support it with a wide-base snowmobile mechanical stand with a rear deflector panel. With the engine off, rotate the track by hand, and inspect condition. If worn or cut, or if track fibers are exposed, or if missing or defective inserts or guides are noted; contact an authorized BRP snowmobile dealer.

Look for any defects, such as:

– Perforations in the track
– Tears in the track (particularly around traction holes on studded tracks)
– Lugs that are broken or torn off, exposing portions of rods
– Delamination of the rubber
– Broken rods
– Missing track guide(s)

⚠ WARNING

Riding with a damaged track or studs could lead to a loss of control.

Track Tension and Alignment

NOTE:
Track tension and alignment are interrelated. Do not adjust one without the other.

⚠ WARNING

To prevent serious injury to individuals near the snowmobile:

– NEVER stand behind or near a moving track.
– Always use a wide-base snowmobile stand with a rear deflector panel if it is necessary to rotate track.
– When the track is raised off the ground, only run it at the lowest possible speed.

Centrifugal force could cause debris, damaged or loose studs, pieces of torn track, or an entire severed track to be violently thrown backwards out of the tunnel with tremendous force, possibly resulting in the loss of a leg or other serious injury.

Verifying the Track Tension

NOTE:
Ride the snowmobile in snow about 15 to 20 minutes prior to adjusting track tension.

1. Remove tether cord cap from engine cut-off switch.
2. Lift rear of vehicle and support it off the ground.

⚠ CAUTION
Use proper lifting techniques, notably using your legs force. Do not attempt to lift the rear of vehicle if it is above your limits.

3. Allow rear suspension to fully extend.
4. Prepare the tensiometer.

Service tool	
Tensiometer (P/N 414348200)	

1. Set the bottom O-ring as per the *Track Deflection* from the applicable vehicle in the *Technical Specifications* table.

1. Bottom O-ring

2. Place the upper O-ring to 0 kgf (0 lbf).

1. Upper O-ring

5. Position the tensiometer on track, halfway between front and rear idler wheels.

6. Push the tensiometer downwards until bottom O-ring (deflection set earlier) be aligned with the bottom of slider shoe.

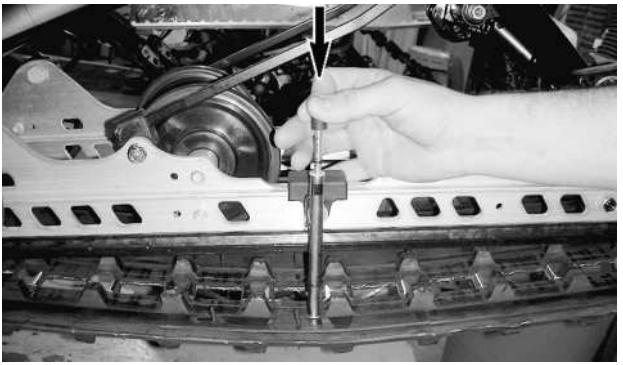

TYPICAL

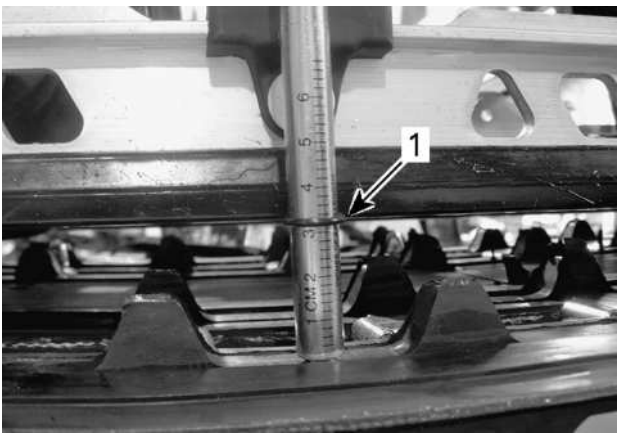

TYPICAL

1. Deflection O-ring aligned with slider shoe

7. Read load recorded by the upper O-ring on the tensiometer.

TYPICAL - LOAD READING

1. Upper O-ring

8. Load reading must be as per the track deflection in the *Technical Specifications*.
9. If load reading is not in accordance with the specification, adjust track tension. Refer to *Track Tension Adjustment*.

Adjusting the Track Tension

1. Remove tether cord cap from engine cut-off switch.
2. Lift rear of vehicle and support it off the ground.

⚠ CAUTION
Use proper lifting techniques, notably using your legs force. Do not attempt to lift the rear of vehicle if it is above your limits.

3. Loosen the rear axle nut.
4. Tighten or loosen both adjustment screws (equally) to increase or decrease track tension.

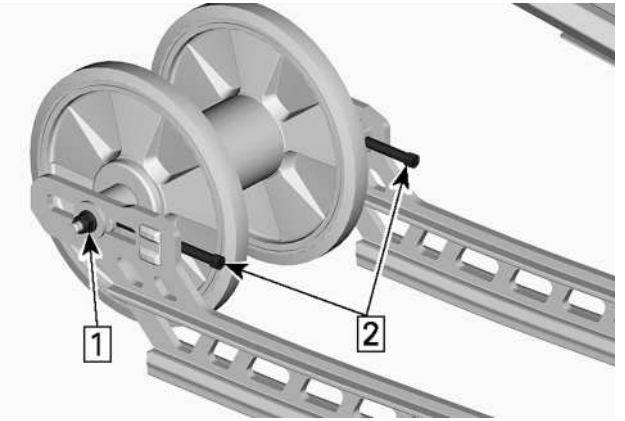

1. *Loosen the axle nut*
2. *Tighten or loosen the adjustment screws*

5. If correct tension is unattainable, contact an authorized BRP snowmobile dealer.
6. Retighten the rear axle nut to specification.

TIGHTENING TORQUE	
Rear idler wheel retaining nut and screw	48 ± 6 Nm (35 ± 4 lbf-ft)

7. Check track alignment as described below.

Aligning the Track

⚠ WARNING

Before checking track alignment, ensure that the track is free of all particles which could be thrown out while track is rotating. Keep hands, tools, feet and clothing clear of track. Always lift the snowmobile on a wide-base stand with a rear deflector panel. Ensure no one is standing in close proximity to the snowmobile, especially at the rear of the track. Never rotate track at high speed.
Centrifugal force could cause debris, damaged or loose studs, pieces of torn track, or an entire severed track to be violently thrown backwards out of the tunnel with tremendous force.

1. Lift rear of vehicle and support it off the ground.

⚠ CAUTION

Use proper lifting techniques, notably by using the force of your legs . Do not attempt to lift the rear of vehicle if it is above your limits.

2. Start engine and accelerate slightly so that track slowly turns. This must be done in a short period of time (15 to 20 seconds).
3. Check that the track is well centered; equal distance on both sides between edges of track guides and slider shoes.

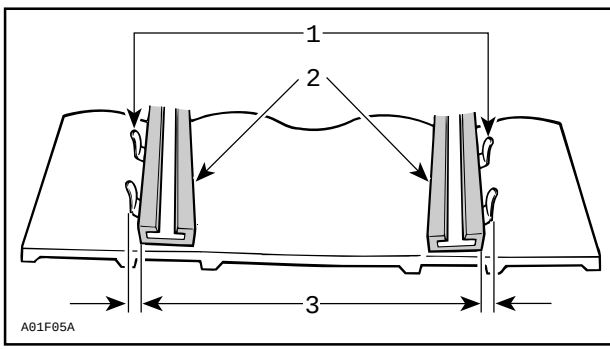

1. *Guides*
2. *Slider shoes*
3. *Equal distance*

4. To correct track alignment:

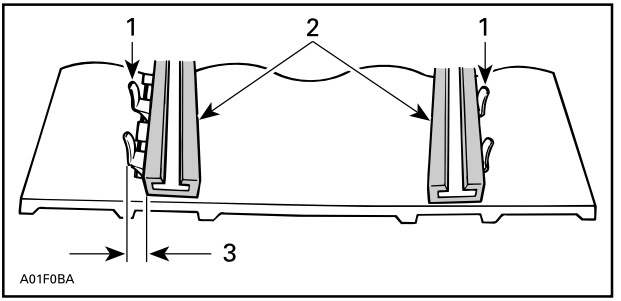

1. *Guides*
2. *Slider shoes*
3. *Tighten on this side*

1. Stop engine.
2. Remove tether cord cap from engine cut-off switch.

⚠ WARNING

Remove tether cord cap from engine cut-off switch before performing any maintenance or adjustment, unless otherwise specified. Vehicle must be parked in a safe place, away from the trail.

3. Loosen the rear axle nut.
4. Tighten adjustment screw on side where the slider shoe is the farthest from the track insert guides.

5. Tighten the rear axle nut.

⚠ WARNING

Properly tighten wheel retaining bolt, otherwise wheel may come off and cause track to “lock”.

6. Restart engine and rotate track slowly to recheck alignment.
7. Tighten the rear axle nut to specified torque.

Tightening Torque	
Rear axle screw	48 ± 6 Nm (35 ± 4 lbf-ft)

8. Reposition snowmobile on the ground.

Suspension

Rear Suspension Condition

Visually inspect all suspension components including slider shoes, springs, wheels, etc.

NOTE:
During normal driving, snow will act as a lubricant and coolant for the slider shoes. Extensive riding on ice or sanded snow, will create excessive heat build-up and cause premature slider shoe wear.

Suspension Stopper Strap Condition

Inspect stopper straps for wear and cracks, bolt and nut for tightness. If loose inspect holes for deformation. Replace as required. Tighten nut to specification.

Tightening Torque	
Stopper strap nut	7 ± 1 Nm (62 ± 9 lbf-in)

Suspension Lubrication

Lubricate the following suspension pivots at grease fittings. Refer to *MAINTENANCE schedule* for maintenance frequency.

RECOMMENDED SERVICE PRODUCT
XPS synthetic suspension grease

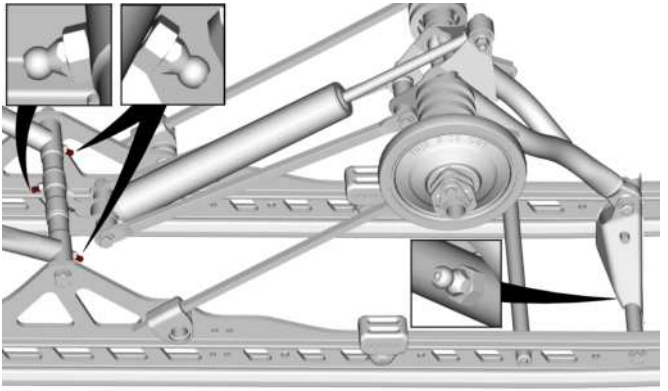

TMOTION X

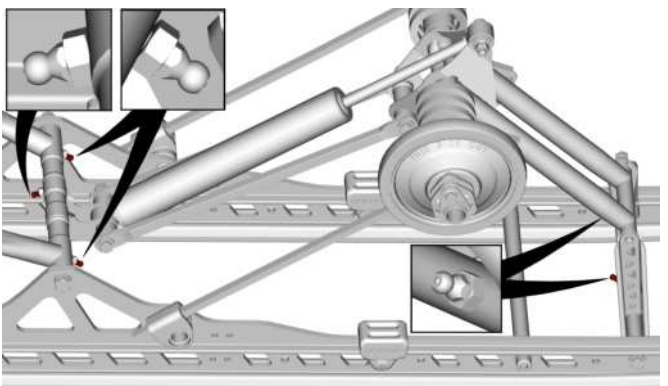

TMOTION XT

Steering and Front Suspension Condition

Visually inspect steering and front suspension for tightness of components (steering arms, control arms and links, tie rods, ball joints, ski bolts, ski legs, etc.). If necessary, contact an authorized BRP snowmobile dealer.

Skis

Wear and Condition of Skis and Runners

Check the condition of the skis and ski runner carbides. If worn, contact an authorized BRP snowmobile dealer.

⚠ WARNING
Excessively worn skis and/or ski runners will adversely affect snowmobile control.

Fuses

Access to Fuse Block

Open RH side panel, refer to *Body and Seat*.

Fuses Location

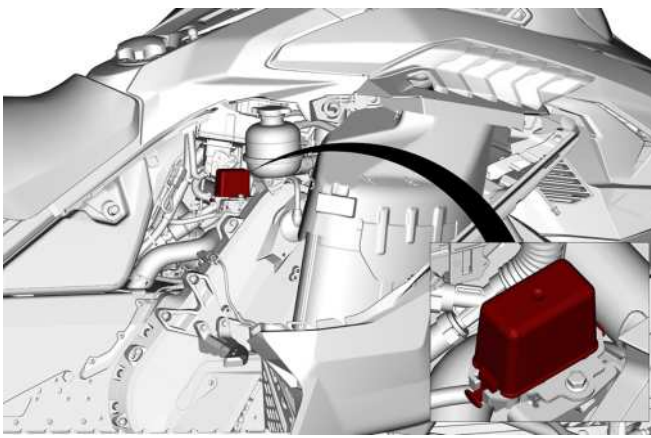

TYPICAL

Remove the fuse box cover.

Refer to *Technical Specifications* for fuse rate and configuration.

Inspecting a Fuse

Check fuse condition and replace it if necessary.

⚠ WARNING

Never use a higher rated fuse than specified.

To remove fuse from holder, pull fuse out. Check if filament is melted.

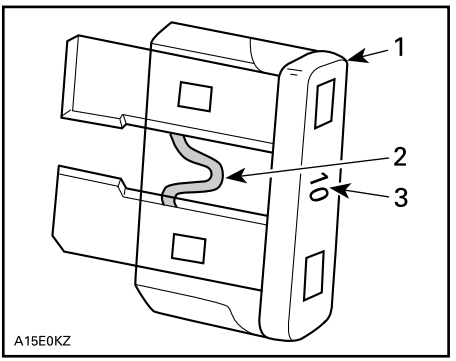

TYPICAL

1. *Fuse*
2. *Check if melted*
3. *Fuse rating (Ampere)*

⚠ WARNING

If fuse burns out repeatedly, source of malfunction should be determined and corrected before restarting. Visit an authorized dealer for servicing.

Headlights

Headlights Beam Aiming

Open the storage compartment.

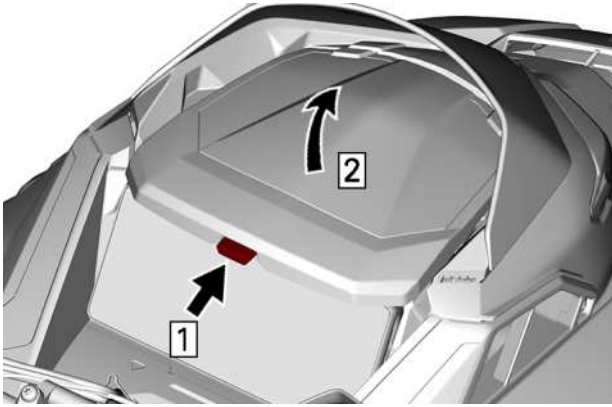

TYPICAL

Step 1. Push
Step 2. Lift

Turn the adjustment screw to reach desired beam height.

TYPICAL

Battery

⚠ WARNING

Never charge or boost the battery while it is installed on the vehicle.

Removing the Battery

1. Remove the seat.
2. Remove the battery cover.

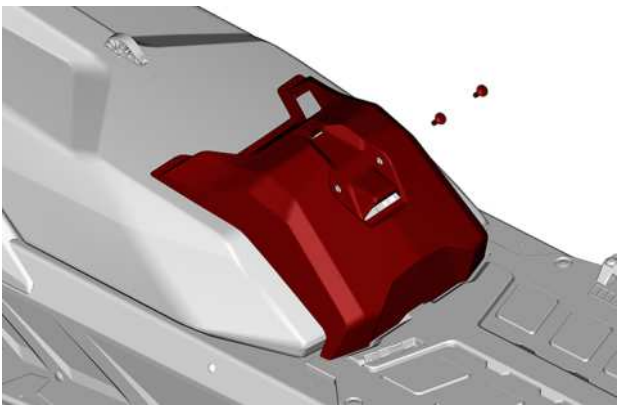

TYPICAL

3. Disconnect the negative terminal first, then the positive terminal.

NOTICE

Battery BLACK (–) cable must always be disconnected first and connected last.

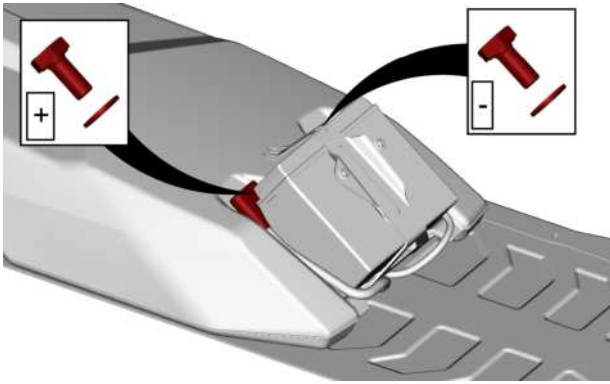

TYPICAL

4. Remove the battery hold down bracket.

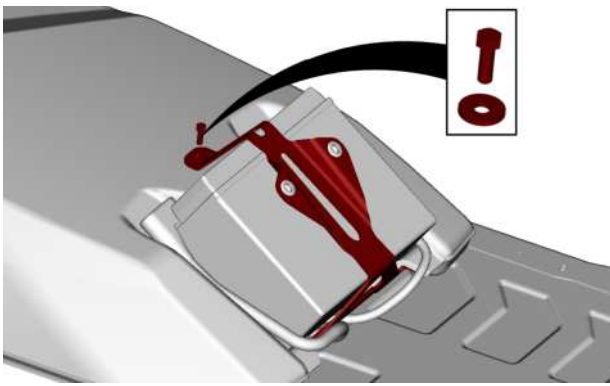

TYPICAL

5. Remove the battery.

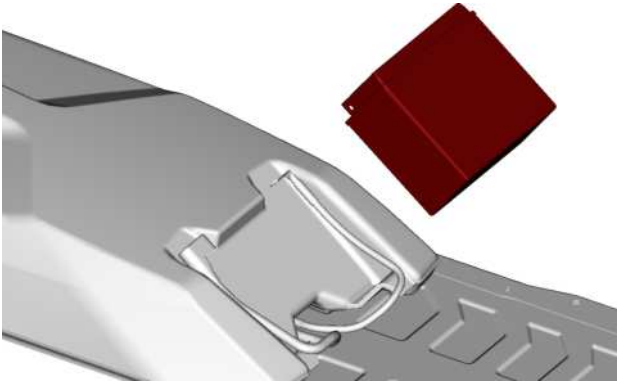

TYPICAL

Cleaning the Battery

Clean battery casing and battery posts using a soft brush and a solution of baking soda and water.

Remove corrosion from battery cable terminals and battery posts using a firm wire brush.

Rinse with clear water then dry well.

Charging the Battery

Use any automotive type battery charger. Always refer to the battery charger manufacturer's instructions.

Installing the Battery

NOTICE

Battery BLACK (–) cable must always be disconnected first and connected last.

The installation is the reverse of the removal procedure. However, pay attention to the following details.

TIGHTENING TORQUE	
Battery terminals (positive and negative)	10 ± 2 Nm (89 ± 18 lbf-in)
Battery hold down bracket	5 ± 0.5 Nm (44 ± 4 lbf-in)
Battery cover retaining screws	1.5 ± 0.5 Nm (13 ± 4 lbf-in)

Post-Operation Care

Remove snow and ice from rear suspension, track, front suspension, steering mechanism and skis.

⚠ WARNING

Make sure D.E.S.S. key is removed from D.E.S.S. post before standing in front the vehicle, getting close to the track or rear suspension components.

Always cover your snowmobile when leaving it outside overnight or during extended periods of inactivity. This will protect it from frost and snow as well as help retain its appearance.

Vehicle Cleaning and Protection

Wash snowmobile using water mixed with a mild detergent.

Use only microfiber cloths or an equivalent.

NOTICE

Never use a high pressure washer to clean the vehicle. Use low pressure only, like a garden hose.

Non Compatible Cleaning Products

Material Type	Non-Compatible Cleaning Products
All plastics, vinyls, painted steel and aluminium	BRAKE AND PARTS CLEANER OR ANY PETROLEUM BASE CLEANING PRODUCTS

Compatible Cleaning Products

Material Type	Cleaning Product
All plastics, vinyls, painted steel and aluminium.	Automotive type soap with water XPS Spray Cleaner and Polish XPS All Purpose Cleaner

For more information and products, Visit the XPS Products website at www.xpslubricants.com

STORAGE

During summer, or when a snowmobile is not in use for more than three months, proper storage is necessary.

Storage
Clean the vehicle
Add fuel stabilizer to fuel following the product manufacturer recommendations. Run the engine after adding the product to the fuel
Lubricate engine. Refer to *Engine Storage Procedure* in this section.
Lubricate brake lever pivot
Lubricate rear suspension
Charge battery monthly to keep it fully charged during storage (if equipped)
Block muffler outlet with rags
Lift rear of vehicle until track is clear of the ground. Do not release track tension

⚠ CAUTION

Use appropriate lifting device or have assistance to share lifting stress. If a lifting device is not used, use proper lifting techniques, notably using your legs force. Do not attempt to lift the rear of vehicle if it is above your limits.

NOTICE

The snowmobile has to be stored in a cool and dry place and covered with an opaque but ventilated tarpaulin. This will prevent sun rays and grime from affecting plastic components and vehicle finish.

NOTICE

Fuel stabilizer should be added prior to engine lubrication to prevent the loss of the chemical properties of fuel and protect the fuel system against varnish deposits.

Engine Storage Procedure

The engine has to be properly lubricated at storage for internal parts protection.

E-TEC Engine - 4.5" Digital Display

Follow these simple steps.

To engage the procedure, do the following:

1. Place the vehicle in a well ventilated area.
2. Start the engine and let it run at idle speed until it reaches its operating temperature (watch the coolant temperature on the display or verify the rear heat exchanger becomes warm). The engine temperature must be above 36 °C (97 °F).
3. Push the TRIP (T) button to select odometer mode.

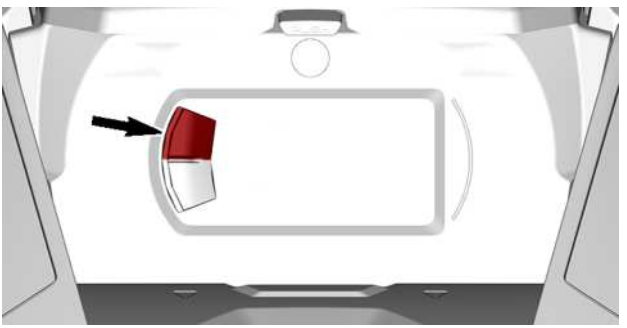

NOTE:
The storage mode does not function in other modes (trip A, trip B and hr trip).

4. Repeatedly depress the HI/LOW beam switch rapidly, then, **while doing this**, press and hold the **TRIP button** until PRESS/HOLD BUTTON FOR OIL INJECTION appears on the display.

TYPICAL

5. Release all buttons when gauge displays **PRESS/HOLD BUTTON FOR OIL INJECTION** appears.
6. Again, press and hold the TRIP (T) button for 2 - 3 seconds.

NOTE:
The gauge will display OIL when the storage procedure is initiated.

7. When gauge displays **OIL**, release button and wait for the lubrication function to end.

TYPICAL

Do not touch anything during engine lubrication cycle.

The engine lubrication function takes approximately 1 minute. During this time the engine RPM will increase slightly to approximately 1600 RPM and the oil pump will "oil flood" the engine.

At the end of engine lubrication procedure, the ECM will turn the engine off.

Remove tether cord cap from engine cut-off switch.

NOTICE

Do not start the engine during storage period.

E-TEC Engine - 10.25" Touchscreen Display

To engage the procedure, do the following:

1. Place the vehicle in a well ventilated area near storage area.
2. Start the engine and let it run at idle speed until it reaches its operating temperature (watch the coolant temperature on the display or verify the rear heat exchanger becomes warm).
3. Go to "Vehicle Settings", select "Vehicle Health" and then "Procedures".
4. Press and hold on "Start Summerization" and follow the steps on screen.

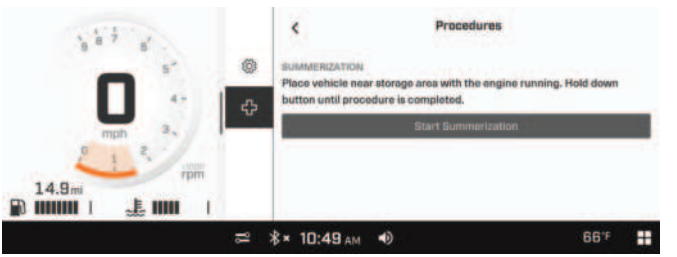

Do not touch anything during engine lubrication cycle.

The engine lubrication function takes approximately 1 minute. During this time the engine RPM will increase between 1500 and 2000 RPM and the oil pump will "oil flood" the engine.

At the end of engine lubrication procedure, the ECM will turn the engine off.

Remove tether cord cap from engine cut-off switch.

NOTICE

Do not start the engine during storage period.

E-TEC Engine - 10.25" Touchscreen Display Models Equipped with Water Injection System

Ensure to proceed with the water injection system storage procedure, prior to perform this procedure. Refer to *Water Injection System Storage Procedure*.

To engage the procedure, do the following:

1. Place the vehicle in a well ventilated area near storage area.
2. Start the engine and let it run at idle speed until it reaches its operating temperature (watch the coolant temperature on the display or verify the rear heat exchanger becomes warm).
3. Go to "Vehicle Settings", select "Vehicle Health" and then "Procedures".
4. Press and hold on "Start Summerization" and follow the steps on screen.

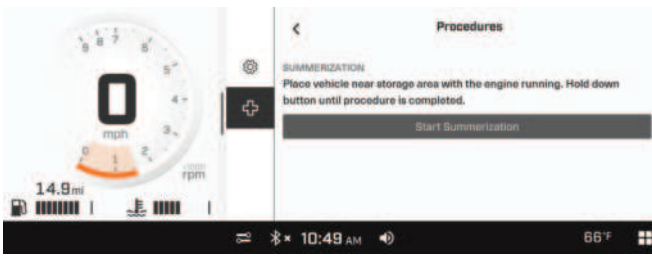

Do not touch anything during engine lubrication cycle.

The engine lubrication function takes approximately 1 minute. During this time the engine RPM will increase between 1500 and 2000 RPM and the oil pump will "oil flood" the engine.

At the end of engine lubrication procedure, the ECM will turn the engine off.

Remove tether cord cap from engine cut-off switch.

NOTICE

Do not start the engine during storage period.

PRESEASON PREPARATION

Proper vehicle preparation is necessary when a vehicle has not been used for more than three months.

Using the *maintenance schedule*, perform the items titled *EVERY YEAR AT PRESEASON*.

Visit your authorized BRP snowmobile dealer for more information.

MAINTENANCE RECORDS

Send photocopy of maintenance record to BRP if needed.

Pre-delivery	
Serial number: _____ Mileage / km: _____ Hours: _____ Date: _____ Dealer no: _____ Notes: _____	Signature/Print:
Refer to vehicle Pre-Delivery Bulletin for detailed installation procedures	

First inspection	
Mileage / km: _____ Hours: _____ Date: _____ Dealer no: _____ Notes: _____	Signature/Print:
For maintenance schedule refer to Maintenance Information section of this operator's guide	

Service	
Mileage / km: _____ Hours: _____ Date: _____ Dealer no: _____ Notes: _____	Signature/Print:
For maintenance schedule refer to Maintenance Information section of this operator's guide	

Service	
Mileage / km: _____ Hours: _____ Date: _____ Dealer no: _____ Notes: _____	Signature/Print:
For maintenance schedule refer to Maintenance Information section of this operator's guide	

Service	
Mileage / km: _____ Hours: _____ Date: _____ Dealer no: _____ Notes: _____	Signature/Print:
For maintenance schedule refer to Maintenance Information section of this operator's guide	

Service	
Mileage / km: _____ Hours: _____ Date: _____ Dealer no: _____ Notes: _____	Signature/Print:
For maintenance schedule refer to Maintenance Information section of this operator's guide	

Service	
Mileage / km: _____ Hours: _____ Date: _____ Dealer no: _____ Notes: _____	Signature/Print:
For maintenance schedule refer to Maintenance Information section of this operator's guide	

Service	
Mileage / km: _____ Hours: _____ Date: _____ Dealer no: _____ Notes: _____	Signature/Print:
For maintenance schedule refer to Maintenance Information section of this operator's guide	

Service	
Mileage / km: _____ Hours: _____ Date: _____ Dealer no: _____ Notes: _____	Signature/Print:
For maintenance schedule refer to Maintenance Information section of this operator's guide	

Service	
Mileage / km: _____ Hours: _____ Date: _____ Dealer no: _____ Notes: _____	Signature/Print:
For maintenance schedule refer to Maintenance Information section of this operator's guide	

Service	
Mileage / km: _____ Hours: _____ Date: _____ Dealer no: _____ Notes: _____	Signature/Print:
For maintenance schedule refer to Maintenance Information section of this operator's guide	

Service	
Mileage / km: _____ Hours: _____ Date: _____ Dealer no: _____ Notes: _____	Signature/Print:
For maintenance schedule refer to Maintenance Information section of this operator's guide	

Service	
Mileage / km: _____ Hours: _____ Date: _____ Dealer no: _____ Notes: _____	Signature/Print:
For maintenance schedule refer to Maintenance Information section of this operator's guide	

Service	
Mileage / km: _____ Hours: _____ Date: _____ Dealer no: _____ Notes: _____	Signature/Print:
For maintenance schedule refer to Maintenance Information section of this operator's guide	

Service	
Mileage / km: _____ Hours: _____ Date: _____ Dealer no: _____ Notes: _____	Signature/Print:
For maintenance schedule refer to Maintenance Information section of this operator's guide	

TECHNICAL INFORMATION

VEHICLE IDENTIFICATION

Vehicle Description Decal

Vehicle description decal is located on right hand side of tunnel.

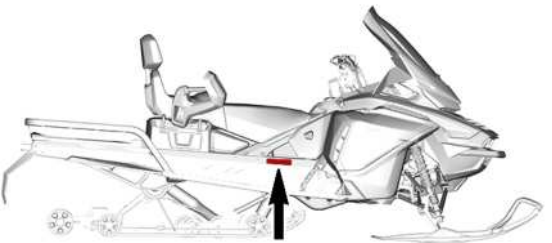

TYPICAL

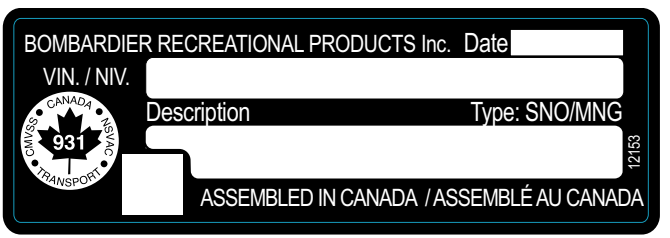

FOR NORTH AMERICAN MARKET

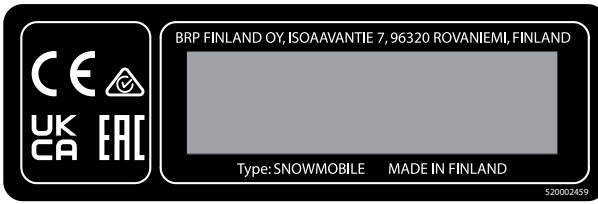

FOR EUROPEAN MARKET

Identification Numbers

The main components of your snowmobile (engine and frame) are identified by different identification numbers. It may sometimes become necessary to locate these numbers for warranty purposes or to trace your snowmobile in the event of loss. These numbers are required by the authorized BRP snowmobile dealer to complete warranty claims properly. We strongly recommend that you take note of all the identification numbers on your snowmobile and supply them to your insurance company.

Vehicle Identification Number (VIN)

VIN is scribed on vehicle description decal. See above. It is also engraved on tunnel near vehicle description decal.

Model number and model year are part of the information found in the VIN. See illustration.

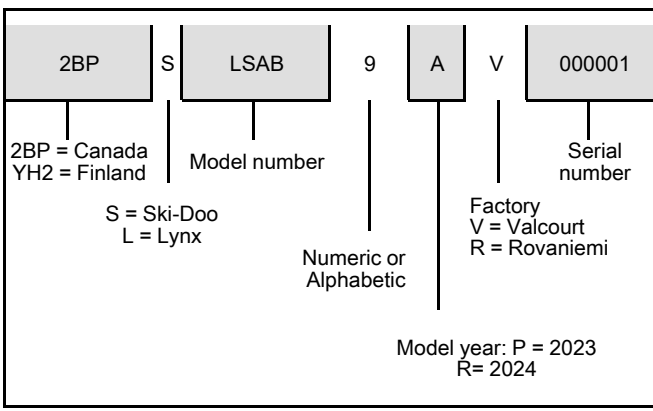

Engine Identification Number Location

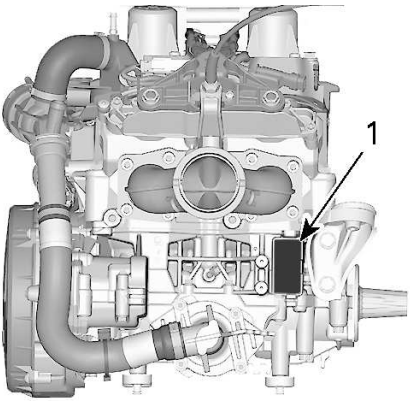

1. *Engine identification number*

COMPLIANCE LABELS

EPA Compliance Label

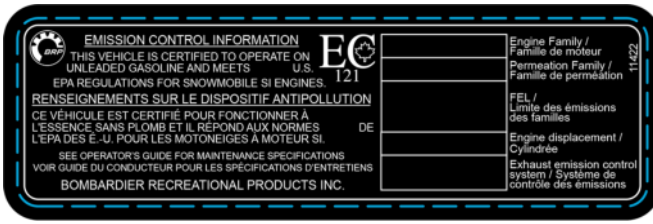

EPA COMPLIANCE LABEL

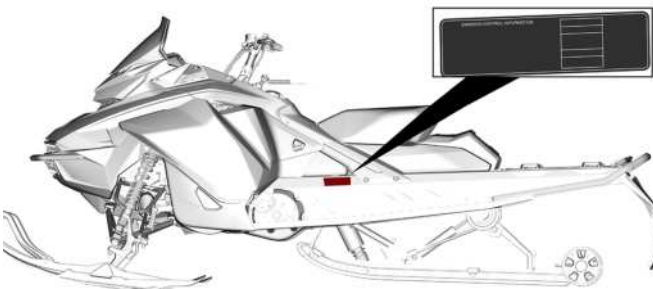

TYPICAL

SSCC Label

Safety standards for snowmobiles have been adopted by the Snowmobile Safety and Certification Committee (SSCC) of which BRP is a proud participating member. Assurance that your snowmobile meets these standards is easily checked by locating the Certification Label on a right vertical portion of the vehicle.

The following label shows that an independent testing laboratory has verified compliance with the SSCC safety standards.

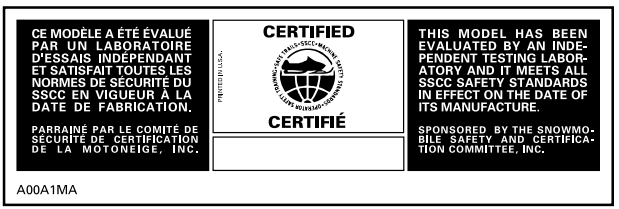

SSCC LABEL

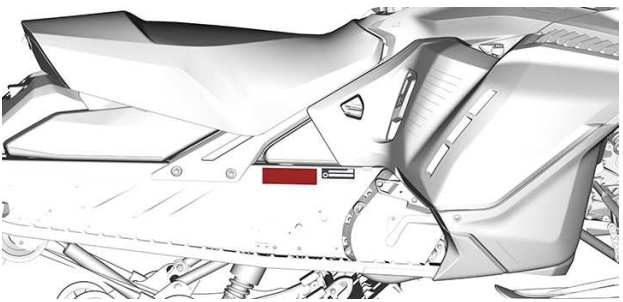

TYPICAL

Regulation (EU) 2016/1628 applicable for Non-Road Mobile Machineries

Vehicles who comply to Regulation (EU) 2016/1628 (NRMM) are identified on the engine.

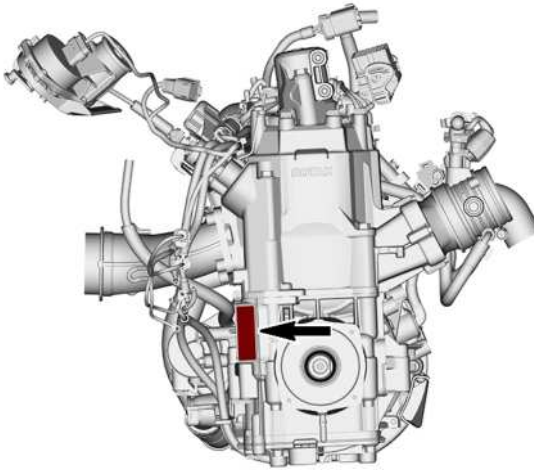

TYPICAL

Rotax NRSC H CO2 g/kWh: XXXX
MXXXXXXX
10559
Prod. date: MM-YYYY
Family type: XXXXXX
e13 SMB/P V-####

TYPICAL - NRMM IDENTIFICATION LABEL

NOISE EMISSION AND VIBRATION VALUES

MODEL		600R E-TEC
NOISE EMISSION AND VIBRATION VALUES[1]		
Noise	Sound power level (L_{WA})	97.5 dB (Uncertainty (K_{wa}) 3 dB)
	Sound pressure (L_{pA})	84 dB (Uncertainty (K_{pA}) 3 dB)
Vibra tion	Hand-arm system	2.5 m/s^2
	Whole body at seat	<0.5 m/s^2
[1]: Noise emission and Vibration values are measured in accordance with Annexes A and B of ISMA 1 regulation on a snow covered or grass surface in neutral or without belt.		

MODEL		850 E-TEC	850 E-TEC Turbo R
NOISE EMISSION AND VIBRATION VALUES[1]			
Noise	Sound power level (L_{WA})	103.3 dB (Uncertainty (K_{wa}) 3 dB)	99.9 dB (Uncertainty (K_{wa}) 3 dB)
	Sound pressure (L_{pA})	92 dB (Uncertainty (K_{pA}) 3 dB)	87 dB (Uncertainty (K_{pA}) 3 dB)
Vibra tion	Hand-arm system	<2.5 m/s^2	<2.5 m/s^2
	Whole body at seat	<0.5 m/s^2	<0.5 m/s^2
[1]: Noise emission and Vibration values are measured in accordance with Annexes A and B of ISMA 1 regulation on a snow covered or grass surface in neutral or without belt.			

EU DECLARATION OF CONFORMITY

565 de la Montagne Street
Valcourt (Québec) J0E 2L0
Canada

www.brp.com

ADVENTURE BY DESIGN

EU Declaration of Conformity

Authorized Representative: BRP-Rotax GmbH Co. KG, Rotaxstrasse 1, Gunskirchen, A-4623, Austria

This declaration of conformity is issued under the sole responsibility of the manufacturer.

The undersigned, representing the manufacturer, hereby declares that model year **2025 Snowmobiles** marked with the CE mark and a 17-character vehicle identification number (VIN) structured as **2BPSxxxxxSVxxxxxx** or **YH2SxxxxxSRxxxxxx** under commercial name **Ski-Doo** comply with all the relevant provisions of the following Directives and Regulations:

Machinery Directive 2006/42/EC as amended up to and including Reg. 2019/1243/EU	ISO 12100:2010
Non-Road Mobile Machinery (NRMM) Regulation (EU) 2016/1628 on gaseous pollutants	Category SMB, Stage V emissions limits
Electromagnetic Compatibility (EMC) Directive 2014/30/EU as amended up to and including Reg. (EU) 2018/1139	CISPR 12:2007/A1:2009 & IEC 61000-6-1:2005 or UN R10.04 or later version
Battery Directive 2006/66/EC as amended up to and including Dir. (EU) 2018/849	EN 50342-7:2015
Radio Equipment (RED) Directive 2014/53/EU as amended up to and including Reg. 2018/1139 (If fitted with radio frequency (RF) D.E.S.S. key)	IEC 62368-1:2014 CISPR 25:2016 ISO 11452-2:2004 ETSI EN 300 330 V2.1.1:2017

Dominic Tessier
Dominic Tessier (Nov 27, 2023 20:30 EST)

Dominic Tessier, Eng.
Director, Vehicle Engineering, Ski-Doo
Bombardier Recreational Products Inc.

Valcourt, QC, Canada
Nov 27, 2023

ski-doo LYNX SEA-DOO EVINRUDE ROTAX can-am

565 de la Montagne Street
Valcourt (Québec) J0E 2L0
Canada
www.brp.com

BRP ADVENTURE BY DESIGN

UK Declaration of Conformity

Authorized Representative: BRP UK Ltd., (BWM Accountants Limited), Suite 5.1, 12 Tithebarn Street, Liverpool, L2 2DT

This declaration of conformity is issued under the sole responsibility of the manufacturer.

The undersigned, representing the manufacturer, hereby declares that model year **2025 Snowmobile** marked with the UK CA mark and a 17-character vehicle identification number (VIN) structured as **2BPSxxxxxSVxxxxxx** or **YH2SxxxxxSRxxxxxx** under commercial name **Ski-Doo** comply with all the relevant provisions of the following UK Statutory instrument and Regulations:

The Supply of Machinery (Safety) Regulations 2008, UK Statutory Instrument 2008/1597 as amended up to and including SI 2020/1112	ISO 12100:2010
Non-Road Mobile Machinery (Type-Approval and Emission of Gaseous and Particulate Pollutants) Regulation 2018, UK SI 2018/764 as amended up to and including SI 2020/1393	Category SMB, Stage V emissions limits
Electromagnetic Compatibility Regulations 2016, UK SI 2016/1091 as amended up to and including SI 2020/1112	CISPR 12:2007/A1:2009 & IEC 61000-6-1:2005 or UN R10.04 or later version
Batteries and Accumulators (Placing on the Market) Regulations 2008, UK SI 2008/2164 as amended up to and including UK SI 2020/904	EN 50342-7:2015
Radio Equipment Regulations 2017, UK SI 2017/1206 as amended up to and including SI 2020/1112	IEC 62368-1:2014 CISPR 25:2016 ISO 11452-2:2004 ETSI EN 300 330 V2.1.1:2017

Dominic Tessier
Dominic Tessier (Nov 27, 2023 20:31 EST)

Dominic Tessier, Eng.
Director, Vehicle Engineering, Ski-Doo
Bombardier Recreational Products Inc.

Valcourt, QC, Canada
Nov 27, 2023

ski-doo LYNX SEA-DOO EVINRUDE ROTAX can-am

EPA CERTIFIED ENGINES

Engine Emissions Information

Manufacturer's Responsibility

Snowmobile manufacturers of snowmobile engines need to determine the exhaust emission levels for each engine horsepower family and certify these engines with the United States of America Environmental Protection Agency (EPA). An emissions control information label, showing emission levels and engine specifications, must be placed on each vehicle at the time of manufacture.

Dealer's Responsibility

When performing service on a certified BRP snowmobiles that carry an emissions control information label, adjustments must be kept within published factory specifications.

Replacement or repair of any emission related component must be executed in a manner that maintains emission levels within the prescribed certification standards.

Dealers are not to modify the engine in any manner that would alter the horsepower or allow emission levels to exceed their predetermined factory specifications.

Exceptions include manufacturer's prescribed changes, such as altitude adjustments for example.

Owner’s Responsibility

The owner / operator is required to have engine maintenance performed to maintain emission levels within prescribed certification standards.

The owner / operator is not to, and should not allow anyone to modify the engine in any manner that would alter the horsepower or allow emissions levels to exceed their predetermined factory specifications.

EPA Emission Regulations

All BRP snowmobiles manufactured by BRP are certified to the EPA as conforming to the requirements of the regulations for the control of air pollution from new snowmobile engines. This certification is contingent on certain adjustments being set to factory standards. For this reason, the factory procedure for servicing the product must be strictly followed and, whenever practicable, returned to the original intent of the design.

The responsibilities listed above are general and in no way a complete listing of the rules and regulations pertaining to the EPA requirements on exhaust emissions for snowmobile products. For more detailed information on this subject, you may contact the following locations:

MAIL:

U.S. Environmental Protection Agency
Certification Division
Gasoline Engine Compliance Center
2000 Traverwood Drive
Ann Arbor MI 48105
USA

INTERNET WEB SITE:

www.epa.gov/otaq/

BRP RF DESS POST GEN3 (CAN)

USA and Canada

This device complies with FCC Part 15 and Industry Canada license exempt RSS standard (s). Operation is subject to the following two conditions:

1. this device may not cause interference, and
2. this device must accept any interference, including interference that may cause undesired operation of the device.

This equipment has been tested and found to comply with the limits for a Class B digital device, pursuant to part 15 of the FCC Rules. These limits are designed to provide reasonable protection against harmful interference in a residential installation. This equipment generates, uses and can radiate radio frequency energy and, if not installed and used in accordance with the instructions, may cause harmful interference to radio communications. However, there is no guarantee that interference will not occur in a particular installation. If this equipment does cause harmful interference to radio or television reception, which can be determined by turning the equipment off and on, the user is encouraged to try to correct the interference by one or more of the following measures:

– Reorient or relocate the receiving antenna.
– Increase the separation between the equipment and receiver.
– Connect the equipment into an outlet on a circuit different from that to which the receiver is connected.
– Consult the dealer or an experienced radio/TV technician for help.

The device has been evaluated to meet general RF exposure requirement. The device can be used in portable exposure condition without restriction.

Le dispositif a été évalué à satisfaire l’exigence générale de l’exposition aux rf. L’appareil peut être utilisé dans des conditions d’exposition portatif sans restriction.

L’émetteur/récepteur exempt de licence contenu dans le présent appareil est conforme aux CNR d’Innovation, Sciences et Développement économique Canada applicables aux appareils radio exempts de licence.

1. l'appareil ne doit pas produire de brouillage, et
2. l'appareil doit accepter tout brouillage radioélectrique subi, même si le brouillage est susceptible d'en compromettre le fonctionnement.

Changes or modifications not expressly approved by the party responsible for compliance could void the user's authority to operate the equipment.

IC: 12006A-1001317030 For variant 1001316154 (CAN)

FCC ID: 2ACER 1001317030 For variant 1001316154 (CAN)

Mexico

IFETEL

Marca: BRP Megatech

Número: BRME1023-28186

BRP Megatech Certificate number: 1450978

Modelo: 1001316154

NOM-208-SCFI-2016 (Disposición Técnica IFT-008-2015)

La operación de este equipo está sujeta a las siguientes dos condiciones:

1. Es posible que este equipo o dispositivo no cause interferencia perjudicial y
2. Este equipo o dispositivo debe aceptar cualquier interferencia, incluyendo la que pueda causar su operación no deseada.

Brazil

Número: 05254-23-15603

BRP Megatech Certificate number: 1450991

Modelo: 1001316154

Este equipamento não tem direito à proteção contra interferência prejudicial e não pode causar interferência em sistemas devidamente autorizados. Para maiores informações, consulte o site da ANATEL.

Japan

This device is granted pursuant to the Japanese Radio Law (電波法) and the Japanese Telecommunications Business Law (電気通信事業法). This device should not be modified (otherwise the granted designation number will become invalid).

Europe

Declaration of Conformity

Simplified EU Declaration of Conformity according Radio Equipment Directive 2014/ 53/EU

CE

DE

Hiermit erklärt BRP Megatech, dass der Funkanlagentyp 1001316154 der Richtlinie 2014/53/EU entspricht. Der vollständige Text der EU--Konformitätserklärung ist unter der folgenden Internetadresse verfügbar: https://www. brp. com/en/corporatesocialresponsibility/productsafety.html

FR

Le soussigné, BRP Megatech, déclare que l'équipement radioélectrique du type 1001316154 est conforme à la directive 2014/53/UE. Le texte complet de la déclaration UE de conformité est disponible à l'adresse internet suivante: https://www. brp. com/en/corporatesocialresponsibility/productsafety.html

BG

С настоящото BRP Megatech декларира, че този тип радиосъоръжение 1001316154 е в съответствие с Директива 2014/53/EC.

Цялостният текст на ЕС декларацията за съответствие може да се намери на следния интернет адрес: https://www.brp.com/en/corporatesocialresponsibility/productsafety.html

EL

Με την παρούσα ο/η BRP Megatech, δηλώνει ότι ο ραδιοεξοπλισμός 1001316154 πληροί την οδηγία 2014/53/ΕΕ. Το πλήρες κείμενο της δήλωσης συμμόρφωσης ΕΕ διατίθεται στην ακόλουθη ιστοσελίδα στο διαδίκτυο: https://www. brp. com/en/corporatesocialresponsibility/productsafety.html

CS

Tímto BRP Megatech prohlašuje, že typ rádiového zařízení 1001316154 je v souladu se směrnicí 2014/53/EU. Úplné znění EU prohlášení o shodě je k dispozici na této internetové adrese: https://www.brp.com/en/corporatesocialresponsibility/productsafety.html

DA

Hermed erklærer BRP Megatech, at radioudstyrstypen 1001316154 er i overensstemmelse med direktiv 2014/53/EU.

EU-overensstemmelseserklæringens fulde tekst kan findes på følgende internetadresse: https://www.brp.com/en/corporatesocialresponsibility/productsafety.html

ET

Käesolevaga deklareerib BRP Megatech, et käesolev raadioseadme tüüp 1001316154 vastab direktiivi 2014/53/EL nõuetele.

ELi vastavusdeklaratsiooni täielik tekst on kättesaadav järgmisel internetiaadressil: https://www. brp. com/en/corporatesocialresponsibility/productsafety.html

ES

Por la presente, BRP Megatech declara que el tipo de equipo radioeléctrico 1001316154 es conforme con la Directiva 2014/53/UE.

El texto completo de la declaración UE de conformidad está disponible en la dirección Internet siguiente: https://www.brp.com/en/corporatesocialresponsibility/productsafety.html

FI

BRP Megatech vakuuttaa, että radiolaitetyyppi 1001316154 on direktiivin 2014/53/EU mukainen. EU-vaatimustenmukaisuusvakuutuksen täysimittainen teksti on saatavilla seuraavassa internetosoitteessa: https://www. brp. com/en/corporatesocialresponsibility/productsafety.html

EN

Hereby, BRP Megatech declares that the radio equipment type 1001316154 is in compliance with Directive 2014/53/EU. The full text of the EU declaration of conformity is available at the following internet address: https://www. brp. com/en/corporatesocialresponsibility/product-safety.html

HR

BRP Megatech ovime izjavljuje da je radijska oprema tipa 1001316154 u skladu s Direktivom 2014/53/EU. Cjeloviti tekst EU izjave o sukladnosti dostupan je na sljedećoj internetskoj adresi:https://www.brp.com/en/corporate-social-responsibility/productsafety.html

HU

BRP Megatech igazolja, hogy a 1001316154 típusú rádióberendezés megfelel a 2014/53/EU irányelvnek. Az EU-megfelelőségi nyilatkozat teljes szövege elérhető a következő internetes címen:https://www.brp.com/en/corporate-socialresponsibility/productsafety.html

IT

Il fabbricante, BRP Megatech, dichiara che il tipo di apparecchiatura radio 1001316154 è conforme alla direttiva 2014/53/UE.

Il testo completo della dichiarazione di conformità UE è disponibile al seguente indirizzo Internet: https://www. brp. com/en/corporate-social-responsibility/productsafety.html

LT

Aš, BRP Megatech, patvirtinu, kad radijo įrenginių tipas 1001316154 atitinka Direktyvą 2014/53/ES. Visas ES atitikties deklaracijos tekstas prieinamas šiuo interneto adresu: https://www. brp. com/en/corporate--social-responsibility/productsafety.html

LV

Ar šo BRP Megatech deklarē, ka radioiekārta 1001316154 atbilst Direktīvai 2014/53/ES. Pilns ES atbilstības deklarācijas teksts ir pieejams šādā interneta vietnē: https://www. brp. com/en/corporate-social-responsibility/productsafety.html

MT

B'dan, BRP Megatech, niddikjara li dan it-tip ta' tagħmir tar-radju 1001316154 huwa konformi mad-Direttiva 2014/53/UE. It-test kollu tad-dikjarazzjoni ta' konformità tal-UE huwa disponibbli f'dan l-indirizz tal-Internet li ġej: https://www. brp. com/en/corporatesocialresponsibility/productsafety.html

NL

Hierbij verklaar ik, BRP Megatech, dat het type radioapparatuur 1001316154 conform is met Richtlijn 2014/53/EU.

De volledige tekst van de EU-conformiteitsverklaring kan worden geraadpleegd op het volgende internetadres: https://www. brp. com/en/corporatesocialresponsibility/productsafety.html

PL

BRP Megatech niniejszym oświadcza, że typ urządzenia radiowego 1001316154 jest zgodny z dyrektywą 2014/53/UE. Pełny tekst deklaracji zgodności UE jest dostępny pod następującym adresem internetowym: https://www. brp. com/en/corporatesocialresponsibility/productsafety.html

PT

O(a) abaixo assinado(a) BRP Megatech declara que o presente tipo de equipamento de rádio 1001316154 está em conformidade com a Diretiva 2014/53/UE.

O texto integral da declaração de conformidade está disponível no seguinte endereço de Internet: https://www.brp.com/en/corporatesocialresponsibility/productsafety.html

RO

Prin prezenta, BRP Megatech declară că tipul de echipamente radio 1001316154 este în conformitate cu Directiva 2014/53/UE. Textul integral al declaratiei UE de conformitate este disponibil la următoarea adresă internet: https://www.brp.com/en/corporatesocialresponsibility/productsafety.html

SV

Härmed försäkrar BRP Megatech att denna typ av radioutrustning 1001316154 överensstämmer med direktiv 2014/53/EU. Den fullständiga texten till EU-försäkran om överensstämmelse finns på följande webbadress: https://www. brp. com/en/corporatesocialresponsibility/productsafety.html

SL

BRP Megatech potrjuje, da je tip radijske opreme 1001316154 skladen z Direktivo 2014/53/EU. Celotno besedilo izjave EU o skladnosti je na voljo na naslednjem spletnem naslovu: https://www.brp.com/en/corporatesocialresponsibility/productsafety.html

SK

BRP Megatech týmto vyhlasuje, že rádiové zariadenie typu 1001316154 je v súlade so smernicou 2014/53/EÚ. Úplné EÚ vyhlásenie o zhode je k dispozícii na tejto internetovej adrese: https://www.brp.com/en/corporatesocialresponsibility/productsafety.html

IS

BRP Megatech lýsir því hér með yfir að þráðlausi fjarskiptabúnaðurinn 1001316154 er í samræmi við tilskipun 2014/53/ESB. Óstyttan texta ESB-samræmisyfirlýsingarinnar er að finna á veffanginu: https://www.brp.com/en/corporatesocialresponsibility/productsafety.html

Liechtenstein

Hiermit erklärt BRP Megatech, dass der Funkanlagentyp 1001316154 der Richtlinie 2014/53/EU entspricht. Der vollständige Text der EU--Konformitätserklärung ist unter der folgenden Internetadresse verfügbar: https://www. brp. com/en/corporatesocialresponsibility/productsafety.html

NO

Hermed erklærer BRP Megatech at radioutstyrstypen 1001316154 er i samsvar med direktiv 2014/53/EU. Hele teksten i EU-samsvarserklæringen finnes på følgende internettadresse: https://www. brp. com/en/corporatesocialresponsibility/productsafety.html

RU

Компания BRP Megatech настоящим заявляет, что радиотехническое оборудование категории 1001316154 отвечает требованиям Директивы 2014/53/EU.

Полный текст декларации соответствия ЕС доступен на сайте : https://www. brp. com/en/corporatesocialresponsibility/productsafety.html

REGULATORY INFORMATION – 10.25IN COLOR TOUCHSCREEN DISPLAY

Technical Information

Digital Audio Broadcasting:

– Operating frequency range: 174 – 240 MHz

Transmitter:

– BT operating frequency range: 2402 – 2480 MHz
– BT version: 5.0
– BT max transmit power: +8 dBm

Receiver:

– FM operating range: 88 - 108 MHz

Manufacturer and Address

Manufacturer:

– Enovation Controls LLC

Address:

– 5311 S 122nd E. Ave. Tulsa,
OK 74146,
USA

To display the regulatory information on the vehicle digital display, go to **Preferences**, **General** then **About**.

USA and Canada

This device complies with FCC Part 15 and Industry Canada license exempt RSS standard (s). Operation is subject to the following two conditions:

1. this device may not cause interference, and
2. this device must accept any interference, including interference that may cause undesired operation of the device.

L'émetteur/récepteur exempt de licence contenu dans le présent appareil est conforme aux CNR d'Innovation, Sciences et Développement économique Canada applicables aux appareils radio exempts de licence.

1. l'appareil ne doit pas produire de brouillage, et
2. l'appareil doit accepter tout brouillage radioélectrique subi, même si le brouillage est susceptible d'en compromettre le fonctionnement.

Changes or modifications not expressly approved by the party responsible for compliance could void the user's authority to operate the equipment.

IC: 28102-ECB01

FCC ID: 2A3FV-ECB01

RF exposure:

1. The equipment complies with FCC RF exposure limits set forth for an uncontrolled environment.
2. This equipment must be installed and operated with a separation distance of at least 20 cm from all persons.
3. The antenna(s) used for this transmitter must not be co-located or operating in conjunction with any other antenna or transmitter.

Mexico

IFETEL

Marca: Enovation Controls LLC

Número: RCPENOD22-2195

Modelo: OD1025-01

NOM-208-SCFI-2016 (Disposición Técnica IFT-008-2015)

La operación de este equipo está sujeta a las siguientes dos condiciones:

1. es posible que este equipo o dispositivo no cause interferencia perjudicial y
2. este equipo o dispositivo debe aceptar cualquier interferencia, incluyendo la que pueda causar su operación no deseada.

Brazil

ANATEL

Agência Nacional de Telecomunicações

15742 – 23 – 14024

Este equipamento não tem direito à proteção contra interferência prejudicial e não pode causar interferência em sistemas devidamente autorizados. Para maiores informações, consulte o site da ANATEL.

Japan

This device is granted pursuant to the Japanese Radio Law (電波法) and the Japanese Telecommunications Business Law (電気通信事業法). This device should not be modified (otherwise the granted designation number will become invalid).

Europe

Declaration of Conformity

Simplified EU Declaration of Conformity according Radio Equipment Directive 2014/53/EU

CE

DE
Hiermit erklärt Enovation Controls LLC, dass der Funkanlagentyp OD1025-01 der Richtlinie 2014/53/EU entspricht.
Der vollständige Text der EU-Konformitätserklärung ist unter der folgenden Internetadresse verfügbar:
https://www.brp.com/en/sustainability/product-responsibility.html
FR
Le soussigné, Enovation Controls LLC, déclare que l'équipement radioélectrique du type OD1025-01 est conforme à la directive 2014/53/UE. Le texte complet de la déclaration UE de conformité est disponible à l'adresse internet suivante: https://www.brp.com/en/sustainability/product-responsibility.html
BG
С настоящото Enovation Controls LLC декларира, че този тип радиосъоръжение OD1025-01 е в съответствие с Директива 2014/53/ЕС.
Цялостният текст на ЕС декларацията за съответствие може да се намери на следния интернет адрес:
https://www.brp.com/en/sustainability/product-responsibility.html
EL
Με την παρούσα ο/η Enovation Controls LLC, δηλώνει ότι ο ραδιοεξοπλισμός OD1025-01 πληροί την οδηγία 2014/53/ΕΕ.
Το πλήρες κείμενο της δήλωσης συμμόρφωσης ΕΕ διατίθεται στην ακόλουθη ιστοσελίδα στο διαδίκτυο:
https://www.brp.com/en/sustainability/product-responsibility.html
CS
Tímto Enovation Controls LLC prohlašuje, že typ rádiového zařízení OD1025-01 je v souladu se směrnicí 2014/53/EU.
Úplné znění EU prohlášení o shodě je k dispozici na této internetové adrese:
https://www.brp.com/en/sustainability/product-responsibility.html
DA
Hermed erklærer Enovation Controls LLC, at radioudstyrstypen OD1025-01 er i overensstemmelse med direktiv 2014/53/EU.
EU-overensstemmelseserklæringens fulde tekst kan findes på følgende internetadresse:
https://www.brp.com/en/sustainability/product-responsibility.html
ET
Käesolevaga deklareerib Enovation Controls LLC, et käesolev raadioseadme tüüp OD1025-01 vastab direktiivi 2014/53/EL nõuetele.
ELi vastavusdeklaratsiooni täielik tekst on kättesaadav järgmisel internetiaadressil:
https://www.brp.com/en/sustainability/product-responsibility.html
ES
Por la presente, Enovation Controls LLC declara que el tipo de equipo radioeléctrico OD1025-01 es conforme con la Directiva 2014/53/UE.
El texto completo de la declaración UE de conformidad está disponible en la dirección Internet siguiente:
https://www.brp.com/en/sustainability/product-responsibility.html
FI
Enovation Controls LLC vakuuttaa, että radiolaitetyyppi OD1025-01 on direktiivin 2014/53/EU mukainen.
EU-vaatimustenmukaisuusvakuutuksen täysimittainen teksti on saatavilla seuraavassa internetosoitteessa:
https://www.brp.com/en/sustainability/product-responsibility.html
EN
Hereby, Enovation Controls LLC declares that the radio equipment type OD1025-01 is in compliance with Directive 2014/53/EU. The full text of the EU declaration of conformity is available at the following internet address: https://www.brp.com/en/sustainability/product-responsibility.html
HR
Enovation Controls LLC ovime izjavljuje da je radijska oprema tipa OD1025-01 u skladu s Direktivom 2014/53/EU.
Cjeloviti tekst EU izjave o sukladnosti dostupan je na sljedećoj internetskoj adresi:
https://www.brp.com/en/sustainability/product-responsibility.html
HU
Enovation Controls LLC igazolja, hogy a OD1025-01 típusú rádióberendezés megfelel a 2014/53/EU irányelvnek.
Az EU-megfelelőségi nyilatkozat teljes szövege elérhető a következő internetes címen:
https://www.brp.com/en/sustainability/product-responsibility.html
IT
Il fabbricante, Enovation Controls LLC, dichiara che il tipo di apparecchiatura radio OD1025-01 è conforme alla direttiva 2014/53/UE.
Il testo completo della dichiarazione di conformità UE è disponibile al seguente indirizzo Internet:
https://www.brp.com/en/sustainability/product-responsibility.html

LT
Aš, Enovation Controls LLC, patvirtinu, kad radijo įrenginių tipas OD1025-01 atitinka Direktyvą 2014/53/ES.
Visas ES atitikties deklaracijos tekstas prieinamas šiuo interneto adresu:
https://www.brp.com/en/sustainability/product-responsibility.html
LV
Ar šo Enovation Controls LLC deklarē, ka radioiekārta OD1025-01 atbilst Direktīvai 2014/53/ES.
Pilns ES atbilstības deklarācijas teksts ir pieejams šādā interneta vietnē:
https://www.brp.com/en/sustainability/product-responsibility.html
MT
B'dan, Enovation Controls LLC, niddikjara li dan it-tip ta' tagħmir tar-radju OD1025-01 huwa konformi mad-Direttiva 2014/53/UE. It-test kollu tad-dikjarazzjoni ta' konformità tal-UE huwa disponibbli f'dan l-indirizz tal-Internet li ġej:
https://www.brp.com/en/sustainability/product-responsibility.html
NL
Hierbij verklaar ik, Enovation Controls LLC, dat het type radioapparatuur OD1025-01 conform is met Richtlijn 2014/53/EU.
De volledige tekst van de EU-conformiteitsverklaring kan worden geraadpleegd op het volgende internetadres:
https://www.brp.com/en/sustainability/product-responsibility.html
PL
Enovation Controls LLC niniejszym oświadcza, że typ urządzenia radiowego OD1025-01 jest zgodny z dyrektywą 2014/53/UE. Pełny tekst deklaracji zgodności UE jest dostępny pod następującym adresem internetowym:
https://www.brp.com/en/sustainability/product-responsibility.html
PT
O(a) abaixo assinado(a) Enovation Controls LLC declara que o presente tipo de equipamento de rádio OD1025-01 está em conformidade com a Diretiva 2014/53/UE.
O texto integral da declaração de conformidade está disponível no seguinte endereço de Internet:
https://www.brp.com/en/sustainability/product-responsibility.html
RO
Prin prezenta, Enovation Controls LLC declară că tipul de echipamente radio OD1025-01 este în conformitate cu Directiva 2014/53/UE. Textul integral al declarației UE de conformitate este disponibil la următoarea adresă internet:
https://www.brp.com/en/sustainability/product-responsibility.html
SV
Härmed försäkrar Enovation Controls LLC att denna typ av radioutrustning OD1025-01 överensstämmer med direktiv 2014/53/EU. Den fullständiga texten till EU-försäkran om överensstämmelse finns på följande webbadress:
https://www.brp.com/en/sustainability/product-responsibility.html
SL
Enovation Controls LLC potrjuje, da je tip radijske opreme OD1025-01 skladen z Direktivo 2014/53/EU.
Celotno besedilo izjave EU o skladnosti je na voljo na naslednjem spletnem naslovu:
https://www.brp.com/en/sustainability/product-responsibility.html
SK
Enovation Controls LLC týmto vyhlasuje, že rádiové zariadenie typu OD1025-01 je v súlade so smernicou 2014/53/EÚ.
Úplné EÚ vyhlásenie o zhode je k dispozícii na tejto internetovej adrese:
https://www.brp.com/en/sustainability/product-responsibility.html
IS
Enovation Controls LLC lýsir því hér með yfir að þráðlausi fjarskiptabúnaðurinn OD1025-01 er í samræmi við tilskipun 2014/53/ESB. Óstyttan texta ESB-samræmisyfirlýsingarinnar er að finna á veffanginu:
https://www.brp.com/en/sustainability/product-responsibility.html
Liechtenstein
Hiermit erklärt Enovation Controls LLC, dass der Funkanlagentyp OD1025-01 der Richtlinie 2014/53/EU entspricht.
Der vollständige Text der EU-Konformitätserklärung ist unter der folgenden Internetadresse verfügbar:
https://www.brp.com/en/sustainability/product-responsibility.html
NO
Hermed erklærer Enovation Controls LLC at radioutstyrstypen OD1025-01 er i samsvar med direktiv 2014/53/EU.
Hele teksten i EU-samsvarserklæringen finnes på følgende internettadresse:
https://www.brp.com/en/sustainability/product-responsibility.html
RU
Компания Enovation Controls LLC настоящим заявляет, что радиотехническое оборудование категории OD1025-01 отвечает требованиям Директивы 2014/53/EU.
Полный текст декларации соответствия ЕС доступен на сайте
https://www.brp.com/en/sustainability/product-responsibility.html

TECHNICAL SPECIFICATIONS

ENGINE

600R E-TEC

ENGINE	
Engine type	Rotax 600R E-TEC liquid cooled with reed valves and electronic RAVE
Number of cylinder	2
Bore	72.3 mm (2.846 in)
Stroke	73 mm (2.874 in)
Displacement	599.4 cm³ (36.58 in³)
Maximum power engine speed	8100 ± 100 RPM

FUEL SYSTEM	
Fuel delivery	E-TEC direct injection
Idle speed (not adjustable)	1200 ± 200 RPM

ELECTRICAL SYSTEM		
Lighting system output		30 A @ 14.5 V 1340 W @ 6000 RPM
Spark plug	Type	NGK ILKR8Q7S (engine and spark plug threads are indexed)
	Gap	**Not adjustable** 0.6 to 0.7 mm (.024 to .028 in)

LUBRICATION SYSTEM			
Oil injection pump type			Electronic oil injection pump
Injection oil	Type	XPS recommended injection oil	XPS 2T E-TEC synthetic oil
		If the XPS product is not available	Use a 2-stroke lubricant designed for snowmobiles meeting or exceeding the following lubricant industry specifications: – JASO FD (M345-2004) – SAE Grade 4 (F / M 4)
	Quantity		3.4 l (3.6 qt (liq.,US))

850 E-TEC

ENGINE	
Engine type	Rotax 850 E-TEC liquid cooled with reed valves and electronic RAVE
Number of cylinder	2
Bore	82 mm (3.228 in)
Stroke	80.4 mm (3.165 in)

ENGINE	
Displacement	849 cm³ (51.81 in³)
Maximum power engine speed	7900 ± 100 RPM

FUEL SYSTEM	
Fuel delivery	E-TEC direct injection with integrated auxiliary injection system
Idle speed (not adjustable)	1200 ± 200 RPM

ELECTRICAL SYSTEM		
Lighting system output		30 A @ 14.5 V 1340 W @ 6000 RPM
Spark plug	Type	NGK ILKR8Q7S (engine and spark plug threads are indexed)
	Gap	**Not adjustable** 0.6 to 0.7 mm (.024 to .028 in)

LUBRICATION SYSTEM			
Oil injection pump type			Electronic oil injection pump
Injection oil	Type	XPS recommended injection oil	XPS 2T E-TEC synthetic oil

LUBRICATION SYSTEM			
		If the XPS product is not available	Use a 2-stroke lubricant designed for snowmobiles meeting or exceeding the following lubricant industry specifications: – JASO FD (M345-2004) – SAE Grade 4 (F / M 4)
	Quantity		3.4 l (3.6 qt (liq.,US))

850 E-TEC Turbo R

ENGINE	
Engine type	Rotax 850 E-TEC turbocharged liquid cooled with reed valves and electronic RAVE
Number of cylinder	2
Bore	82 mm (3.228 in)
Stroke	80.4 mm (3.165 in)
Displacement	849 cm³ (51.81 in³)
Maximum power engine speed	7900 ± 100 RPM

FUEL SYSTEM	
Fuel delivery	E-TEC direct injection with integrated auxiliary injection system
Idle speed (not adjustable)	1200 ± 200 RPM

ELECTRICAL SYSTEM		
Lighting system output		30 A @ 14.5 V 1340 W @ 6000 RPM
Spark plug	Type	NGK ILKR8Q7S (engine and spark plug threads are indexed)
	Gap	**Not adjustable** 0.6 to 0.7 mm (.024 to .028 in)

LUBRICATION SYSTEM			
Oil injection pump type			Electronic oil injection pump
Injection oil	Type	XPS recommended injection oil	XPS 2T E-TEC synthetic oil

LUBRICATION SYSTEM			
		If the XPS product is not available	Use a 2-stroke lubricant designed for snowmobiles meeting or exceeding the following lubricant industry specifications: – JASO FD (M345-2004) – SAE Grade 4 (F / M 4)
	Quantity		3.4 l (3.6 qt (liq.,US))

Freeride

COOLING SYSTEM		
Coolant type	Recommended	XPS Extended life pre-mixed coolant
	Alternative, or if not available	Ethyl glycol and distilled water (50%/50%) or coolant specifically formulated for aluminum engines
Coolant capacity	146" 850 E-TEC	7.3 l (7.3 qt(liq.,US))
	146" 850 E-TEC Turbo R	7.3 l (7.3 qt(liq.,US))
	154" 850 E-TEC 154" 850 E-TEC Turbo	7.4 l (7.8 qt(liq.,US))
	165" models	7.5 l (7.9 qt(liq.,US))

FUEL SYSTEM		
Fuel pump		In-tank electrical fuel pump
Fuel	Type	Premium unleaded gasoline (fuel which may contain up to 10% MAX ethanol
	Octane rating	91 Pump Posted AKI (R+M)/2) 95 (RON)
Fuel tank capacity		36 l (9.5 gal(liq.,US))

ELECTRICAL SYSTEM			
Battery (if equipped)			12 V, 18 A•h
Headlamp			2 x 2.6/3.5 W LED
Taillight and stoplight			2 x 2.6/3.5 W LED
Fuses	F1	Battery	30 A
	F2	Accessory	15 A
	F3	Wake Up / ECM / Cluster / Taillight	10 A
	F4	Cluster	20 A
	F5	Loads	15 A
	F6	Start / RER	5 A

DRIVE SYSTEM - CHAINCASE			
Chaincase oil	Type	Recommended	XPS Synthetic chaincase oil
		Alternative, or if not available	75W140 gear oil that meets the API GL-5 specification
	Capacity		350 ml (12 fl oz(US))
Chain drive ratio	146" 850 E-TEC (CAN/USA)		21/49
	146" 850 E-TEC (EUR) 154" 850 E-TEC (CAN/USA)		21/51
	146" 850 Turbo R		22/51
	154" 850 E-TEC (EUR) 154" 850 E-TEC Turbo R 165”		21/53

DRIVE SYSTEM - DRIVE AND DRIVEN PULLEYS			
Drive pulley type			pDrive with clickers
Drive pulley engage ment RPM	850 E-TEC Sea level calibration		3300 ± 100 RPM
	850 E-TEC High altitude calibration		3600 ± 100 RPM
	850 E-TEC Turbo R Sea level calibration		3400 ± 100 RPM
	850 E-TEC Turbo R High altitude calibration		3800 ± 100 RPM
Driven pulley type			QRS Vent Plus
Pulley distance	Z		Not adjustable 20.7 mm (.815 in)
	X		Not adjustable 41.27 ± 1.8 mm (1.625 ± .071 in)
Offset	Y - X	New	Not adjustable 3 mm (.118 in)
		After break-in	Not adjustable 1.65 ± 0.93 mm (.065 ± .037 in)
Drive belt	Width		38.3 mm (1.508 in)
	Wear limit		35.9 mm (1.413 in)

DRIVE SYSTEM - TRACK		
Drive sprocket number of teeth	146" 154" x 2.5"	8

DRIVE SYSTEM - TRACK		
	All others	6
Track dimension (Width x Length x Profile Height)	146"	40 cm x 370.5 cm x 63.5 cm (15.75 in x 146 in x 2.5 in)
	154"	40.6 cm x 392 cm x 63.5 cm (15 in x 154 in x 2.5 in)
		40.6 cm x 392 cm x 76.2 cm (15 in x 154 in x 3 in)
	165"	40 cm x 419 cm x 63.5 cm (15.75 in x 165 in x 2.5 in)
		40.6 cm x 419 cm x 76.2 cm (15 in x 165 in x 3 in)
Track adjustment(3)	Deflection	32 mm (1.26 in)
	Force	7.3 kgf (16 lbf)

BRAKE SYSTEM		
Brake	Type	Single 200 mm cross drilled carbon steel disc
Brake fluid	Type	DOT 4
	Quantity	65 ml (2.2 fl oz(US))

BRAKE SYSTEM	
Caliper	Fixed twin pistons (2 x 40 mm)
Brake pad material	Organic
Minimum brake pad thickness (includes backing plate)	5 mm (0.197 in)
Minimum brake disc thickness	4.5 mm (0.177 in)
Maximum brake disc warpage	0.25 mm (0.01 in)

FRONT SUSPENSION	
Suspension type	RAS 3
Suspension maximum travel	215 mm (8.5 in)
Shock absorber type	KYB Pro 40 EA-3 (with lightweight springs)
Stabilizer bar type	Link

REAR SUSPENSION		
Suspension type		tMotion XT
Suspension maximum travel		264 mm (10.4 in)
Shock absorber type	Center	KYB Pro 40 EA-3 (with lightweight springs)
	Rear	KYB Pro 40 EA-3

WEIGHT AND DIMENSIONS		
Mass (dry)	146" 850 E-TEC	203 kg (448 lb)
	146" 850 E-TEC Turbo R	212 kg (468 lb)
	154" 850 E-TEC	201 kg (444 lb)
	154" 850 E-TEC Turbo R	210 kg (463 lb)
	165" 850 E-TEC	202 kg (446 lb)
	165" 850 E-TEC Turbo R	212 kg (467 lb)
Overall length	146"	305.8 cm (120.4 in)
	154" models	318.8 cm (125.5 in)
	165" models	329.9 cm (129.9 in)
Overall width	All models	107.3 cm (42.2 in) (Adjustable)
Overall height	All models	139.5cm (54.9 in)
Ski stance	All models	93 cm (36 in) (Adjustable)

(1)	NOTICE	Do not attempt to adjust gap on this spark plug.
(2)	Refer to *INJECTION OIL* for detailed information.	
(3)	Refer to *Track Tension Verification* in *Maintenance Procedures* for detailed procedure.	

Summit

COOLING SYSTEM		
Coolant type	Recommended	XPS Extended life pre-mixed coolant
	Alternative, or if not available	Ethyl glycol and distilled water (50%/50%) or coolant specifically formulated for aluminum engines

FUEL SYSTEM		
Fuel pump		In-tank electrical fuel pump
Fuel	Type	Premium unleaded gasoline (fuel which may contain up to 10% MAX ethanol
	Octane rating	91 Pump Posted AKI (R+M)/2) 95 (RON)
Fuel tank capacity		36 l (9.5 gal(liq.,US))

ELECTRICAL SYSTEM			
Battery (if equipped)			12 V, 18 A•h
Headlamp			2 x 2.6/3.5 W LED
Taillight and stoplight			2 x 2.6/3.5 W LED
Fuses	F1	Battery	30 A
	F2	Accessory	15 A
	F3	Wake Up / ECM / Cluster / Taillight	10 A
	F4	Cluster	20 A
	F5	Loads	15 A
	F6	Start / RER	5 A

DRIVE SYSTEM - CHAINCASE			
Chaincase oil	Type	Recommended	XPS Synthetic chaincase oil
		Alternative, or if not available	75W140 gear oil that meets the API GL-5 specification
	Capacity		350 ml (12 fl oz(US))
Chain drive ratio	146”		21/51
	154" 850 E-TEC (CAN/USA)		
	154” 600R E-TEC		21/53
	154" 850 E-TEC (ASIA/EUR)		
	All 165”		
	All 850 E-TEC Turbo R		

DRIVE SYSTEM - DRIVE AND DRIVEN PULLEYS		
Drive pulley type		pDrive with clickers
Drive pulley engage ment RPM	Adrenaline (Edge Package) 850 E-TEC (EUR) Sea level calibration	3300 ± 100 RPM
	X (Expert Package) 154” 850 E-TEC (ASIA) Sea level calibration	
	850 E-TEC (CAN/USA) Sea level calibration	
	Adrenaline 850 E-TEC (EUR) Sea level calibration	3600 ± 100 RPM
	850 E-TEC High altitude calibration	
	600R E–TEC	3400 ± 100 RPM
	X (Expert Package) 850 E-TEC Turbo R (EUR) Sea level calibration	
	X (Expert Package) 154” 850 E-TEC Sea level calibration (ASIA)	3800 ± 100 RPM
	850 E-TEC Turbo R (Except EUR) High altitude calibration	
Driven pulley type	Adrenaline 600R E-TEC Adrenaline (Edge Package) 600R E-TEC	QRS Vent
	All other models	QRS Vent Plus
Drive belt	Width	38.3 mm (1.508 in)
	Wear limit	35.9 mm (1.413 in)

DRIVE SYSTEM - TRACK		
Drive sprocket number of teeth	146"	8
	All others	6
Track dimension (Width x Length x Profile Height)	146"	40 cm x 370.5 cm x 63.5 cm (15.75 in x 146 in x 2.5 in)
	154"	40 cm x 392 cm x 63.5 cm (15.75 in x 154 in x 2.5 in)
		40 cm x 392 cm x 76.2 cm (15.75 in x 154 in x 3 in)
	165"	40 cm x 419 cm x 63.5 cm (15.75 in x 165 in x 2.5 in)
		40 cm x 419 cm x 76.2 cm (15.75 in x 165 in x 3 in)
Track adjustment(3)	Deflection	32 mm (1.26 in)
	Force	7.3 kgf (16 lbf)

BRAKE SYSTEM		
Brake	Type	Single 200 mm cross drilled carbon steel disc
Brake fluid	Type	DOT 4

BRAKE SYSTEM		
	Quantity	65 ml (2.2 fl oz(US))
Caliper		Fixed twin pistons (2 x 40 mm)
Brake pad material		Organic
Minimum brake pad thickness (includes backing plate)		5 mm (0.197 in)
Minimum brake disc thickness		4.5 mm (0.177 in)
Maximum brake disc warpage		0.25 mm (0.01 in)

FRONT SUSPENSION		
Suspension type		RAS 3
Suspension maximum travel	Adrenaline HCE	215 mm (8.5 in)
	Adrenaline (Edge Package) X X (Expert Package)	207 mm (8.2 in)

FRONT SUSPENSION		
Shock absorber type	Adrenaline Adrenaline (Edge Package)	KYB 36
	HCE	KYB Pro 40 R Integral
	X	KYB 36 Plus (with lightweight springs)
	X (Expert Package)	KYB Pro 36 EA-3 (with lightweight springs)
Stabilizer bar type		Link

REAR SUSPENSION			
Suspension type		Adrenaline Adrenaline (Edge Package)	tMotion X
		HCE	tMotion HCE
		X	tMotion X (with adjustable limiter strap)
		X (Expert Package)	tMotion XT (with adjustable limiter strap)
Suspension maximum travel		HCE	246 mm (9.7 in)
		All other models	258 mm (10.2 in)
Shock absorber type	Center	Adrenaline Adrenaline (Edge Package)	KYB 36

REAR SUSPENSION			
		HCE	KYB Pro 40 Integral
		X X (Expert Package)	KYB 36 Plus (with lightweight spring)
	Rear	Adrenaline Adrenaline (Edge Package)	KYB 36
		HCE	KYB Pro 40 Integral
		X	KYB 36 Plus
		X (Expert Package)	KYB Pro 36 EA-3

WEIGHT AND DIMENSIONS			
Mass (dry)	600R E-TEC	Adrenaline 146"	197 kg (434 lb)
		Adrenaline 154"	195 kg (430 lb)
		Adrenaline (Edge Package) 146"	198 kg (437 lb)
		Adrenaline (Edge Package) 154"	196 kg (433 lb)
	850 E-TEC	Adrenaline 146"	204 kg (449 lb)
		Adrenaline 154"	202 kg (445 lb)
		Adrenaline (Edge Package) 146"	204 kg (450 lb)

WEIGHT AND DIMENSIONS			
		Adrenaline (Edge Package) 154"	202 kg (445 lb)
		Adrenaline (Edge Package) 165"	203 kg (448 lb)
		HCE	208 kg (458 lb)
		X 154"	196 kg (433 lb)
		X 165"	199 kg (438 lb)
		X (Expert Package) 154"	198 kg (437 lb)
		X (Expert Package) 165"	201 kg (444 lb)
	850 E-TEC Turbo R	HCE	217 kg (478 lb)
		X 154"	205 kg (453 lb)
		X 165"	208 kg (458 lb)
		X (Expert Package) 154"	207 kg (457 lb)
		X (Expert Package) 165"	210 kg (463 lb)
Overall length		Adrenaline 146"	320.8 cm (122.4 in)
		Adrenaline (Edge Package) 146"	305.8 cm (120.4 in)

WEIGHT AND DIMENSIONS		
	Adrenaline 154"	331.8 cm (130.6 in)
	All other 154" models	318.8 cm (125.5 in)
	165"	329.9 cm (129.9 in)
Overall width	Adrenaline HCE	107.3 cm (42.2 in)
	Adrenaline (Edge Package) X X (Expert Package)	102.4 cm (40.3 in)
Overall height	X X (Expert Package)	130.6 cm (51.4 in)
	Adrenaline Adrenaline (Edge Package) HCE	139.5cm (54.9 in)
Ski stance	Adrenaline (Edge Package) X X (Expert Package)	86.4 cm (34 in) (Adjustable)
	Adrenaline HCE	93 cm (36 in) (Adjustable)

(1)	NOTICE	Do not attempt to adjust gap on this spark plug.
(2)	Refer to *INJECTION OIL* for detailed information.	
(3)	Refer to *Track Tension Verification* in *Maintenance Procedures* for detailed procedure.	

TROUBLESHOOT-ING

TROUBLESHOOTING GUIDELINES – E-TEC ENGINES

ELECTRIC STARTER DOES NOT WORK

1. **Emergency engine stop switch in OFF position or tether cord cap not installed on engine cut-off switch.**
   – *Place the emergency engine stop switch in the ON position and install tether cord cap (on engine cut-off switch.*
2. **Throttle applied while attempting an engine start.**
   – *Release throttle while cranking.*

ENGINE IS CRANKING BUT FAILS TO START

1. **No fuel to the engine.**
   – *Check fuel tank level, add fuel if necessary.*
2. **System voltage too low.**
   – *Contact an authorized BRP snowmobile dealer.*

ENGINE RPM DOES NOT REACH CLUTCH ENGAGEMENT POINT

1. **D.E.S.S. did not read D.E.S.S. key code in the tether cord cap. D.E.S.S. pilot lamp blinks (slow short beeps/ repetitive).**
   – *Properly install tether cord cap.*
2. **D.E.S.S. has read a different code than the one programmed. D.E.S.S. pilot lamp blinks rapidly (fast short beeps/repetitive).**
   – *Install a tether cord cap for which this snowmobile was programmed.*
3. **ECM does not recognize the D.E.S.S. key.**
   – *Refer to an authorized BRP snowmobile dealer.*

ENGINE LACKS ACCELERATION OR POWER

1. **Engine warm-up in progress.**
   - *Drive vehicle at low speeds for a few minutes.*
2. **Engine break-in period not completed.**
   - *Complete break-in period.*
3. **Drive and driven pulleys require servicing.**
   - *Contact an authorized BRP snowmobile dealer.*
4. **Engine overheats.**
   - *Check coolant level, see Maintenance procedures.*
   - *Check heat exchangers cleanliness. Clean if necessary.*
5. **Drive belt worn too thin.**
   - *If the drive belt has lost more than 3 mm (1/8 in) of its original width, it will affect vehicle performance.*
   - *Replace drive belt.*
6. **Incorrect track adjustment.**
   - *See MAINTENANCE and/or an authorized Lynx dealer for proper alignment and tension adjustments.*
7. **R.A.V.E. valves problem.**
   - *Seek service from an authorized BRP snowmobile dealer, repair shop, or person of your own choosing for maintenance, repair, or replacement.*
8. **Fuel pressure too low.**
   - *Seek service from an authorized BRP snowmobile dealer, repair shop, or person of your own choosing for maintenance, repair, or replacement.*

ENGINE BACKFIRES

1. **Engine is running too hot.**
   - *See item 4 of ENGINE LACKS POWER.*
2. **Ignition timing is incorrect or there is an ignition system failure.**
   - *Seek service from an authorized BRP snowmobile dealer, repair shop, or person of your own choosing for maintenance, repair, or replacement.*
3. **Exhaust system leak.**
   - *Seek service from an authorized BRP snowmobile dealer, repair shop, or person of your own choosing for maintenance, repair, or replacement.*
4. **Fuel pressure too low.**
   - *Seek service from an authorized BRP snowmobile dealer, repair shop, or person of your own choosing for maintenance, repair, or replacement.*

ENGINE MISFIRES

1. **Water in fuel.**
   - *Drain fuel system and refill with fresh fuel.*
2. **RAVE valves malfunction.**
   - *Have RAVE valves system inspected. Seek service from an authorized BRP snowmobile dealer, repair shop, or person of your own choosing for maintenance, repair, or replacement.*

HEATED GRIPS/THUMB WARMERS ARE NOT WORKING

1. **Engine RPM is too low.**
   - *Make sure engine RPM is above 2000.*

ENGINE HAS SHUT DOWN

1. **The engine shuts down after long periods of idling.**
   - *Do not let engine idle too long. Refer to Vehicle warm-up in operating instruction.*

Pilot Lamps, Messages and Beeper Codes Pilot Lamps – 4.5” Digital Display

Gauge pilot lamp(s) will inform you if an anomaly occurs or to inform you of a particular condition.

Pilot lamp can flash alone or in combination with another lamp.

The lower display is used as a complement of the pilot lamps to give you a brief description if an anomaly occurs or to inform you of a particular condition.

4.5" DIGITAL LOWER DISPLAY

Messages will be displayed with a beep code and pilot lamp(s).

Beeper codes will be heard, and messages will be displayed to catch your attention.

See table below for details.

NOTE:
Some of the listed pilot lamps and messages do not apply to all models.

Pilot lamp ON	BEEPER	Message Display	Description
	4 short beeps every 30 seconds	HIGH ENGINE TEMPERA TURE	Engine is overheating, reduce snowmobile speed and run in loose snow or stop engine immediately and let engine cool down. Check coolant level, refer to *Maintenance*. If coolant level is correct and overheating persists, contact an authorized BRP snowmobile dealer. Do not run the engine if condition persists.
		MUFFLER OVERHEAT	Reduce speed or stop engine. Let engine cool down and restart. If overheating persists, contact an authorized BRP snowmobile dealer. Do not run the engine if condition persists.
	Short beeps repeating rapidly	HIGH ENGINE TEMPERA TURE	Critical overheat. Stop engine immediately and let engine cool down. Check coolant level, refer to *Maintenance*. If coolant level is correct and overheating persists, contact an authorized BRP snowmobile dealer. Do not run the engine if condition persists.
		MUFFLER OVERHEAT	Critical overheat. Stop engine immediately and

Pilot lamp ON	BEEPER	Message Display	Description
		ECM OVERHEAT	let engine cool down. If overheating persists, contact an authorized BRP snowmobile dealer. Do not run the engine if condition persists.
	4 short beeps every 5 minutes	BATT VOLT	Indicate a low or high battery voltage condition. Visit an authorized BRP snowmobile dealer as soon as possible.
	4 short beeps	CHECK ENGINE	Engine fault, see an authorized BRP snowmobile dealer, repair shop or person of your own choosing as soon as possible.
	—	—	Displayed when brake is applied for more than 15 seconds while throttle lever is squeezed and vehicle is moving at more than 5 km/h (3 mph).
—	4 short beeps every 5 minutes	KNOCK	Engine detonation (RPM is limited when this condition occurs). – Ensure recommended fuel is used. – Check fuel quality, replace if necessary.

Pilot lamp ON	BEEPER	Message Display	Description
			– If fault still occurs, contact an authorized BRP snowmobile dealer, repair shop, or person of your own choosing.
—	4 short beeps every 5 minutes	REV LIMIT	Engine RPM limited for protection when certain faults occur.
—	—	OVER REV	Indicates that maximum engine RPM is reached. Check clutch calibration.
—	Short beeps repeating rapidly	SHUTDOWN	Shutdown procedure in force due to engine overheating or fuel pump problem.
—	2 short beeps every 10 seconds	BELT OVERHEAT	The belt temperature reaches 75 C 167 F. Message and beeps disappears when the temperature drops below 75 C 167 F.
—	2 short beeps every 15 seconds	BELT OVERLOAD	If a critical condition is detected over 1 minute. Message and beeps disappears if the driver reduces critical style of riding.
—	2 short beeps every 10 seconds	BELT OVERLOAD	If it stills in critical condition over 10 minutes. Message will

Pilot lamp ON	BEEPER	Message Display	Description
			not disappear until the engine shutdown.
DESS	2 short beeps	—	Good key, vehicle ready to operate.
	Short beeps, repeating slowly	WRONG KEY	Unable to read key (bad connection). Make sure the key is clean and correctly snapped on post.
	Short beeps repeating rapidly	BAD KEY	Invalid key or key not programmed. Use the proper key for the vehicle or have the programmed.
(blin-king)	—	—	Fuel level sensor problem.

Pilot Lamps, Messages and Beeper Codes Pilot Lamps – 10.25” Digital Touchscreen

Gauge pilot lamp(s) will inform you if an anomaly occurs or to inform you of a particular condition.

DIGITAL PILOT LAMP – 10.25” COLOR DIGITAL TOUCHSCREEN

PILOT LAMPS – 10.25" COLOR DIGITAL TOUCHSCREEN

Pilot lamp can flash alone or in combination with another lamp.

Notifications will appear on the top right corner of the screen as a complement of the pilot lamps to give you a brief description if an anomaly occurs or to inform you of a particular condition.

Messages will be displayed with a beep code and pilot lamp(s).

Beeper codes will be heard, and messages will be displayed to catch your attention.

See table below for details.

NOTE:
Some of the listed pilot lamps and messages do not apply to all models.

Pilot lamp ON	BEEPER	Message Display	Description
	4 short beeps every 30 seconds	HIGH ENGINE TEMPERA TURE	Engine is overheating, reduce snowmobile speed and run in loose snow or stop engine immediately and let engine cool down. Check coolant level, refer to *Maintenance*. If coolant level is correct and overheating persists, contact an authorized BRP snowmobile dealer. Do not run the engine if condition persists.
		MUFFLER OVERHEAT	Reduce speed or stop engine. Let engine cool down and restart. If overheating persists, contact an authorized BRP snowmobile dealer. Do not run the engine if condition persists.
	Short beeps repeat ing rapidly	HIGH ENGINE TEMPERA TURE	Critical overheat. Stop engine immediately and let engine cool down. Check coolant level, refer to *Maintenance*. If coolant level is correct and overheating persists, contact an authorized BRP snowmobile dealer. Do not run the engine if condition persists.

Pilot lamp ON	BEEPER	Message Display	Description
		MUFFLER OVERHEAT ECM OVERHEAT	Critical overheat. Stop engine immediately and let engine cool down. If overheating persists, contact an authorized BRP snowmobile dealer. Do not run the engine if condition persists.
	4 short beeps every 5 minutes	BATT VOLT	Indicate a low or high battery voltage condition. Visit an authorized BRP snowmobile dealer as soon as possible.
	4 short beeps	CHECK ENGINE	Engine fault, see an authorized BRP snowmobile dealer, repair shop or person of your own choosing as soon as possible.
	—	—	Displayed when brake is applied for more than 15 seconds while throttle lever is squeezed and vehicle is moving at more than 5 km/h (3 mph).
—	4 short beeps every 5 minutes	KNOCK	Engine detonation (RPM is limited when this condition occurs). – Ensure recommended fuel is used. – Check fuel quality, replace if

Pilot lamp ON	BEEPER	Message Display	Description
			necessary. – If fault still occurs, contact an authorized BRP snowmobile dealer, repair shop, or person of your own choosing.
—	4 short beeps every 5 minutes	REV LIMIT	Engine RPM limited for protection when certain faults occur.
—	—	OVER REV	Indicates that maximum engine RPM is reached. Check clutch calibration.
—	Short beeps repeat ing rapidly	SHUTDOWN	Shutdown procedure in force due to engine overheating or fuel pump problem.
—	2 short beeps every 10 seconds	BELT OVERHEAT	The belt temperature reaches 75 C 167 F. Message and beeps disappears when the temperature drops below 75 C 167 F.
—	2 short beeps every 15 seconds	BELT OVERLOAD	If a critical condition is detected over 1 minute. Message and beeps disappears if the driver reduces critical style of riding.
—	2 short beeps	BELT OVERLOAD	If it stills in critical condition over 10

Pilot lamp ON	BEEPER	Message Display	Description
	every 10 seconds		minutes. Message will not disappear until the engine shutdown.
DESS	2 short beeps	—	Good key, vehicle ready to operate.
	Short beeps, repeat ing slowly	WRONG KEY	Unable to read key (bad connection). Make sure the key is clean and correctly snapped on post.
	Short beeps repeat ing rapidly	BAD KEY	Invalid key or key not programmed. Use the proper key for the vehicle or have the programmed.
(blin-king)	—	—	Fuel level sensor problem.
!	—	INTAKE COOLANT LEVEL - LOW	Low ICE fluid level. Replenish fluid level.
		INTAKE COOLANT LEVEL - EMPTY	ICE fluid tank empty. Replenish fluid level.

Pilot lamp ON	BEEPER	Message Display	Description
		INTAKE COOLANT LEVEL - ERROR	Water Injection system fault, see an authorized BRP snowmobile dealer, repair shop or person of your own choosing

Fault Codes

The fault codes can be displayed on the center display.

The fault codes are accessible in the setting menu.

Contact an authorized BRP snowmobile dealer for code signification.

This page is intentionally blank

WARRANTY

BRP LIMITED WARRANTY USA AND CANADA: 2025 SKI-DOO® SNOWMOBILES

1) SCOPE OF THE LIMITED WARRANTY

Bombardier Recreational Products Inc. (“BRP”) warrants its 2025 Ski--Doo snowmobiles (the”**Product**”) sold by a BRP dealers authorized to distribute the Product in the United States of America (“USA”) and in Canada (a “**BRP Dealer**”) from defects in material or workmanship for the period and under the conditions described below. This limited warranty will become null and void if:

1. The snowmobile was used for racing or any other competitive activity, at any point, even by a previous owner; or
2. The snowmobile has been altered or modified in such a way so as to adversely affect its operation, performance or durability, or has been altered or modified to change its intended use.

Non-factory installed parts and accessories are not covered under this limited warranty. Please refer to the applicable parts and accessories limited warranty text.

2) LIMITATIONS OF LIABILITY

TO THE EXTENT PERMITTED BY LAW, THIS WARRANTY IS EXPRESSLY GIVEN AND ACCEPTED IN LIEU OF ANY AND ALL OTHER WARRANTIES, EXPRESSED OR IMPLIED, INCLUDING WITHOUT LIMITATION ANY WARRANTY OF MERCHANTABILITY OR FITNESS FOR A PARTICULAR PURPOSE. TO THE EXTENT THAT THEY CANNOT BE DISCLAIMED, THE IMPLIED WARRANTIES ARE LIMITED IN DURATION TO THE LIFE OF THE EXPRESS WARRANTY. INCIDENTAL AND CONSEQUENTIAL DAMAGES ARE EXCLUDED FROM COVERAGE UNDER THIS WARRANTY. SOME STATES/PROVINCES DO NOT ALLOW FOR THE DISCLAIMERS, LIMITATIONS AND EXCLUSIONS IDENTIFIED ABOVE. AS A RESULT, THEY MAY NOT APPLY TO YOU. THIS WARRANTY GIVES YOU SPECIFIC RIGHTS, AND YOU MAY ALSO HAVE OTHER LEGAL RIGHTS WHICH MAY VARY FROM STATE TO STATE, OR PROVINCE TO PROVINCE.

Neither the distributor, any BRP Dealer nor any other person has been authorized to make any affirmation, representation or warranty regarding the Product, other than those contained in this limited warranty, and if made, shall not be enforceable against BRP. BRP reserves the right to modify this limited warranty at any time, being under- stood that such modification will not alter the warranty conditions applicable to the Products sold while this warranty is in effect.

3) EXCLUSIONS – ARE NOT WARRANTED

The following are not warranted under any circumstances:

– Normal wear and tear;
– Routine maintenance items, tune ups, adjustments;

- Damage caused by failure to provide proper maintenance and/or storage, as described in the Operator's Guide;
- Damage resulting from removal of parts, improper repairs, service, maintenance, modifications or use of parts or accessories not manufactured or approved by BRP or resulting from repairs done by a person that is not an authorized servicing BRP Dealer;
- Damage caused by abuse, abnormal use, neglect, use of the Product on surfaces other than snow, or operation of the Product in a manner inconsistent with the recommended operation described in the Operator's Guide;
- Damage resulting from accident, submersion, fire, snow or water ingestion, theft, vandalism or any act of God;
- Operation with fuels, oils or lubricants which are not suitable for use with the Product (see the Operator's Guide);
- Incidental or consequential damages, or damages of any kind including without limitation towing, storage, telephone, rental, taxi, inconvenience, insurance coverage, loan payments, loss of time, loss of income; and
- Damage resulting from studs installed on tracks if the installation does not conform to BRP's instructions.

4) WARRANTY COVERAGE PERIOD

This limited warranty will be in effect from (1) the date of delivery to the first retail consumer, or (2) the date the Product is first put into use, whichever occurs first and for the applicable period below:

1. TWELVE (12) consecutive months, for private use or commercial use owners. However, the warranty coverage period on a snowmobile delivered between June 1st and December 1st of a given year will expire November 30th of the following year.
2. For emission-related components, please also refer to the US EPA Emission-Related Warranty.

The repair or replacement of parts or the performance of service under this warranty does not extend the life of this limited warranty beyond its original expiration date.

5) CONDITIONS REQUIRED FOR WARRANTY COVERAGE

This warranty coverage is available only if each of the following conditions has been fulfilled:

- The Product must be purchased as new and unused by its first owner from a BRP dealer authorized to distribute Ski-Doo snowmobiles in the country in which the sale occurred;
- The BRP specified pre-delivery inspection process must be completed and documented and signed by the purchaser;
- The Product must have undergone proper registration by BRP Dealer;

– The Product must be purchased in the country in which the purchaser resides; and
– Routine maintenance outlined in the Operator's Guide must be timely performed in order to maintain warranty coverage. BRP reserves the right to make warranty coverage contingent upon proof of proper maintenance.

BRP will not honor this limited warranty to any private use owner or commercial use owner if one of the preceding conditions has not been met. Such limitations are necessary in order to allow BRP to preserve both the safety of its products, and also that of its consumers and the general public.

6) WHAT TO DO TO OBTAIN WARRANTY COVERAGE

The customer must cease using the Product upon the appearance of an anomaly, notify a servicing BRP Dealer within two (2) months of the appearance of the anomaly and provide the Dealer with reasonable access to the Product and reasonable opportunity to repair it.

The notification period is subject to the applicable national or local legislation in customer's country.

The customer must also present to the BRP Dealer, proof of purchase of the Product and must sign the repair/work order prior to starting the repair in order to validate the warranty repair.

All parts replaced under this limited warranty become the property of BRP.

7) WHAT BRP WILL DO

BRP's obligations under this warranty are limited to, at its sole discretion, repairing parts found defective under normal use, maintenance and service, or replacing such parts without charge for parts and labor, at any authorized BRP Dealer during the warranty coverage period under the conditions described herein. No claim of breach of warranty shall be cause for cancellation or rescission of the sale of the snowmobile to the owner.

In the event that service is required outside of the country of original sale, the owner will bear responsibility for any additional charges due to local practices and conditions, such as, but not limited to, freight, insurance, taxes, license fees, import duties, and any and all other financial charges, including those levied by governments, states, territories and their respective agencies.

BRP reserves the right to improve or modify products from time to time without assuming any obligation to modify products previously manufactured.

8) TRANSFER

If the ownership of a Product is transferred during the warranty coverage period, this limited warranty, subject to its terms and conditions, shall also be transferred and be valid for the remaining coverage period provided BRP or an authorized BRP Dealer or an authorized distributor/dealer receives a proof that the former owner agreed to the transfer of ownership, in addition to the coordinates of the new owner.

9) CONSUMER ASSISTANCE

In the event of a controversy or a dispute in connection with this limited warranty, BRP suggests that you try to resolve the issue at the dealership level. We recommend discussing the issue with the authorized BRP Dealer's service manager or owner.

If the matter still remains unresolved, contact BRP by filling out the customer contact form at **www.brp.com** or contact BRP by mail at one of the addresses listed under the *CONTACT US* section of this guide.

US EPA EMISSION-RELATED WARRANTY

Bombardier Recreational Products Inc. (“BRP”) warrants to the ultimate purchaser and each subsequent purchaser that this new engine, including all parts of its exhaust emission-control system and its evaporative emission-control system, meets two conditions:

1. It is designed, built, and equipped so it conforms at the time of sale to the ultimate purchaser with the requirements of 40 CFR 1051 and 40 CFR 1060.
2. It is free from defects in materials and workmanship that may keep it from meeting the requirements of 40 CFR 1051 and 40 CFR 1060.

Where a warrantable condition exists, BRP will repair or replace, as it elects, any part or component with a defect in materials or workmanship that would increase the engine’s emissions of any regulated pollutant within the stated warranty period at no cost to the owner, including expenses related to diagnosing and repairing or replacing emission-related parts. All defective parts replaced under this warranty become the property of BRP.

For all emission-related warranty claims, BRP is limiting the diagnosis and repair of emission-related parts to the authorized Ski-Doo dealers, unless for emergency repairs as required by item 2 of the following list.

As a certifying manufacturer, BRP will not deny emission-related warranty claims based on any of the following:

1. Maintenance or other service BRP or BRP's authorized facilities performed.
2. Engine/equipment repair work that an operator performed to correct an unsafe, emergency condition attributable to BRP as long as the operator tries to restore the engine/equipment to its proper configuration as soon as possible.
3. Any action or inaction by the operator unrelated to the warranty claim.
4. Maintenance that was performed more frequently than BRP specify.
5. Anything that is BRP fault or responsibility.
6. The use of any fuel that is commonly available where the equipment operates unless BRP written maintenance instructions state that this fuel would harm the equipment’s emission control system and operators can readily find the proper fuel. See maintenance information section and fuel requirements of fueling section.

Emission-Related Warranty Period

The emission-related warranty is valid for the following period whichever comes first:

	Hours	Months	Kilometers
Exhaust emission-related components	200	30	4000
Evaporative emission-related components	N/A	24	N/A

Components Covered

The emission-related warranty covers all components whose failure would increase an engine's emissions of any regulated pollutant, including the following listed components:

1. For exhaust emissions, emission-related components include any engine parts related to the following systems:
   - Air-induction system
   - Fuel system
   - Ignition system
   - Exhaust gas recirculation systems
2. The following parts are also considered emission-related components for exhaust emissions:
   - Aftertreatment devices
   - Crankcase ventilation valves
   - Sensors
   - Electronic control units
3. The following parts are considered emission-related components for evaporative emissions:
   - Fuel tank
   - Fuel cap
   - Fuel line
   - Fuel line fittings
   - Clamps*
   - Pressure relief valves*
   - Control valves*
   - Control solenoids*
   - Electronic controls*
   - Vacuum control diaphragms*
   - Control cables*
   - Control linkages*
   - Purge valves
   - Vapor hoses

- Liquid/vapor separator
- Carbon canister
- Canister mounting brackets
- Carburetor purge port connector

NOTE:
*As related to the evaporative emission control system

4. Emission-related components also include any other part whose only purpose is to reduce emissions or whose failure will increase emissions without significantly de- grading engine/equipment performance.

Limited Applicability

As a certifying manufacturer, BRP may deny emission-related warranty claims for failures that have been caused by the owner's or operator's improper maintenance or use, by accidents for which the manufacturer has no responsibility, or by acts of God.

For example, an emission-related warranty claim need not be honored for failures that have been directly caused by the operator's abuse of the engine/equipment or the operator's use of the engine/equipment in a manner for which it was not designed and are not attributable to the manufacturer in anyway.

If you have any question regarding your warranty rights and responsibility or for the name and location of the nearest authorized BRP dealer, you should contact BRP by filling out the customer contact form at **www.brp.com** or contact BRP by mail at one of the addresses listed under the *CONTACT US* section of this guide, or call at 1-888-272-9222.

BRP INTERNATIONAL LIMITED WARRANTY: 2025 SKI-DOO® SNOWMOBILES

1) SCOPE OF THE LIMITED WARRANTY

Bombardier Recreational Products Inc. (“BRP”) warrants its 2025 Ski--Doo snowmobiles (the “**Product**”) sold by distributors or dealers authorized by BRP to distribute Ski-Doo snowmobiles ("**Ski-Doo Distributor/Dealer**") outside of the United States of America, Canada, members of the European Economic Area (which is comprised of the member states of the European Union plus the United Kingdom, Norway, Iceland and Liechtenstein) (“**EEA**”), members states of the Commonwealth of the Independent States (including Ukraine and Turkmenistan) ("**CIS**") and Turkey, from defects in material or workmanship for the period and under the conditions described below.

Non-factory installed parts and accessories are not covered under this limited warranty. Please refer to the applicable parts and accessories limited warranty text.

This limited warranty will become null and void if:

1. The snowmobile was used for racing or any other competitive activity, at any point, even by a previous owner; or
2. The snowmobile has been altered or modified in such a way so as to adversely affect its operation, performance or durability, or has been altered or modified to change its intended use.

2) LIMITATIONS OF LIABILITY

TO THE EXTENT PERMITTED BY LAW, THIS WARRANTY IS EXPRESSLY GIVEN AND ACCEPTED IN LIEU OF ANY AND ALL OTHER WARRANTIES, EXPRESSED OR IMPLIED, INCLUDING WITHOUT LIMITATION ANY WARRANTY OF MERCHANTABILITY OR FITNESS FOR A PARTICULAR PURPOSE. TO THE EXTENT THAT THEY CANNOT BE DISCLAIMED, THE IMPLIED WARRANTIES ARE LIMITED IN DURATION TO THE LIFE OF THE EXPRESS WARRANTY. INCIDENTAL AND CONSEQUENTIAL DAMAGES ARE EXCLUDED FROM COVERAGE UNDER THIS WARRANTY. SOME JURISDICTIONS DO NOT ALLOW FOR THE DISCLAIMERS, LIMITATIONS AND EXCLUSIONS IDENTIFIED ABOVE. AS A RESULT, THEY MAY NOT APPLY TO YOU. THIS WARRANTY GIVES YOU SPECIFIC RIGHTS, AND YOU MAY ALSO HAVE OTHER LEGAL RIGHTS WHICH MAY VARY FROM COUNTRY TO COUNTRY. BRP SHALL NOT BE HELD LIABLE IF PRODUCTS OR WARRANTY PARTS ARE NOT AVAILABLE IN CERTAIN COUNTRIES FOR REASONS OUTSIDE OF BRP’S CONTROL. (FOR PRODUCTS PURCHASED IN AUSTRALIA REFER TO “FOR PRODUCTS SOLD IN AUSTRALIA ONLY”, BELOW).

Neither the Ski-Doo Distributor/Dealer nor any other person has been authorized to make any affirmation, representation or warranty

regarding the product, other than those contained in this limited warranty, and if made, shall not be enforceable against BRP.

BRP reserves the right to modify this warranty at any time, being understood that such modification will not alter the warranty conditions applicable to the Products sold while this warranty is in effect.

3) EXCLUSIONS – ARE NOT WARRANTED

The following are not warranted under this limited warranty under any circumstances:

- Normal wear and tear;
- Routine maintenance items, tune ups, adjustments;
- Damage caused by negligence or failure to provide proper maintenance and/or storage, as described in the operator's guide;
- Damage resulting from removal of parts, improper repairs, service, maintenance, modifications or use of parts or accessories not manufactured or approved by BRP which in its reasonable judgement are either incompatible with the product or adversely affect its operation, performance and durability, or resulting from repairs done by a person that is not an authorized servicing Ski-Doo Distributor/ Dealer;
- Damage caused by abuse, abnormal use, neglect, racing or operation of the Product on surfaces other than snow, or operation of the Product in a manner inconsistent with the recommended operation described in the Operator’s Guide;
- Damage resulting from accident, submersion, fire, snow or water ingestion, theft, vandalism or any act of God;
- Operation with fuels, oils or lubricants which are not suitable for use with the Product (see the Operator’s Guide);
- Damage resulting from rust, corrosion or exposure to the elements;
- Incidental or consequential damages, or damages of any kind including without limitation towing, storage, transportation expenses, telephone, rental, taxi, inconvenience, insurance coverage, loan payments, loss of time, loss of income; or time missed for downtime experience due to service work, and;
- Damage resulting from studs installed on tracks if the installation does not conform to BRP’s instructions.

4) WARRANTY COVERAGE PERIOD

This warranty will be in effect from (1) the date of delivery to the first retail consumer or (2) the date the Product is first put into use, whichever occurs first and for a period of:

- TWELVE (12) CONSECUTIVE MONTHS, for private or commercial use owners. However, the warranty coverage period on a snowmobile delivered between June 1st and December 1st of a given year will expire November 30th of the following year.

The repair or replacement of parts or the performance of service under this warranty does not extend the life of this warranty beyond its original expiration date.

Note that the duration and any other modalities of the warranty coverage are subject to the applicable national or local legislation in the customer's country.

FOR PRODUCTS SOLD IN AUSTRALIA ONLY

Nothing in these warranty terms and conditions should be taken to exclude, restrict or modify the application of any condition, warranty, guarantee, right or remedy conferred or implied under the Competition and Consumer Act 2010 (Cth), including the Australian Consumer Law or any other law, where to do so would contravene that law, or cause any part of these terms and conditions to be void. The benefits given to you under this limited warranty are in addition to other rights and remedies that you have under Australian law.

Our goods come with guarantees that cannot be excluded under the Australian Consumer Law. You are entitled to a replacement or refund for a major failure and for compensation for any other reasonably foreseeable loss or damage. You are also entitled to have the goods repaired or replaced if the goods fail to be of acceptable quality and the failure does not amount to a major failure.

5) CONDITIONS TO HAVE WARRANTY COVERAGE

This warranty coverage is available only if each of the following conditions has been fulfilled:

- The Product must be purchased as new and unused by its first owner from a Ski-Doo Distributor/Dealer authorized to distribute Ski-Doo snowmobiles in the country in which the sale occurred;
- The BRP specified pre-delivery inspection process must be completed, documented and signed by the purchaser;
- The Product must have undergone proper registration by an authorized Ski-Doo Distributor/Dealer;
- The Product must be purchased in the country in which the purchaser resides.
- Routine maintenance outlined in the Operator’s Guide must be timely performed in order to maintain warranty coverage. BRP reserves the right to make warranty coverage contingent upon proof of proper maintenance.

BRP will not honour this limited warranty to any private use owner or commercial use owner if one of the preceding conditions has not been met. Such limitations are necessary in order to allow BRP to preserve both the safety of its products, and also that of its consumers and the general public.

6) WHAT TO DO TO OBTAIN WARRANTY COVERAGE

The customer must cease using the snowmobile upon the appearance of an anomaly. The customer must notify a servicing BRP Ski-Doo Distributor/ Dealer within two (2) months of the appearance of a defect, and provide it with reasonable access to the Product and reasonable opportunity to repair it. The customer must also present to the authorized Ski-Doo Distributor/ Dealer, proof of purchase of the Product and must sign the repair/work order prior to starting the repair in order to validate the warranty repair. All parts replaced under this limited warranty become the property of BRP.

Note that the notification period is subject to the applicable national or local legislation in customer's country.

7) WHAT BRP WILL DO

To the extent permitted by law, BRP’s obligations under this warranty are limited to, at its sole discretion, repairing parts found defective under normal use, maintenance and service, or replacing such parts without charge for parts and labour, at any authorized Ski-Doo Distributor/Dealer during the warranty coverage period under the conditions described herein. BRP’s responsibility is limited to making the required repairs or replacements of parts. No claim of breach of warranty shall be cause for cancellation or rescission of the sale of the snowmobile to the owner. You may have other legal rights which may vary from country to country.

In the event that service is required outside of the country of original sale, the owner will bear responsibility for any additional charges due to local practices and conditions, such as, but not limited to, freight, insurance, taxes, license fees, import duties, and any and all other financial charges, including those levied by governments, states, territories and their respective agencies.

BRP reserves the right to improve or modify products from time to time without assuming any obligation to modify products previously manufactured.

8) TRANSFER

If the ownership of a Product is transferred during the warranty coverage period, this limited warranty, subject to its terms and conditions, shall also be transferred and be valid for the remaining coverage period provided BRP or an authorized Ski-Doo Distributor/Dealer receives a proof that the former owner agreed to the transfer of ownership, in addition to the coordinates of the new owner.

9) CONSUMER ASSISTANCE

In the event of a controversy or a dispute in connection with this limited warranty, BRP suggests that you try to resolve the issue at the Ski--Doo Distributor/Dealer level. We recommend discussing the issue with the authorized Ski-Doo Distributor/Dealer's service manager or owner.

If the matter still remains unresolved, contact BRP by filling out the customer contact form at **www.brp.com** or contact BRP by mail at one of the addresses listed under the *CONTACT US* section of this guide.

BRP LIMITED WARRANTY FOR THE EUROPEAN ECONOMIC AND THE COMMONWEALTH OF THE INDEPENDENT STATES (CIS) AREAS AND TURKEY: 2025 SKI-DOO® SNOWMOBILES

1) SCOPE OF THE LIMITED WARRANTY

Bombardier Recreational Products Inc. (“**BRP**”) warrants its 2025 Ski-Doo snowmobiles (the “**Product**”) sold by distributors or dealers authorized by BRP to distribute Ski-Doo snowmobiles ("**Ski-Doo Distributor/Dealer**") in member states of the European Economic Area (which is comprised of the member states of the European Union plus the United Kingdom, Norway, Iceland and Liechtenstein) ("**EEA**"), in member states of the Commonwealth of the Independent States (including Ukraine and Turkmenistan) ("**CIS**") and Turkey from defects in material or workmanship for the period and under the conditions described below.

Non-factory installed parts and accessories are not covered under this limited warranty. Please refer to the applicable parts and accessories limited warranty text.

This limited warranty will become null and void if:

1. The snowmobile was used for racing or any other competitive activity, at any point, even by a previous owner; or
2. The snowmobile has been altered or modified in such a way so as to adversely affect its operation, performance or durability, or has been altered or modified to change its intended use.

2) LIMITATIONS OF LIABILITY

TO THE EXTENT PERMITTED BY LAW, THIS WARRANTY IS EXPRESSLY GIVEN AND ACCEPTED IN LIEU OF ANY AND ALL OTHER WARRANTIES, EXPRESSED OR IMPLIED, INCLUDING WITHOUT LIMITATION ANY WARRANTY OF MERCHANTABILITY OR FITNESS FOR A PARTICULAR PURPOSE. TO THE EXTENT THAT THEY CANNOT BE DISCLAIMED, THE IMPLIED WARRANTIES ARE LIMITED IN DURATION TO THE LIFE OF THE EXPRESS WARRANTIES. INCIDENTAL AND CONSEQUENTIAL DAMAGES ARE EXCLUDED FROM COVERAGE UNDER THIS WARRANTY. SOME JURISDICTIONS DO NOT ALLOW FOR THE DISCLAIMERS, LIMITATIONS AND EXCLUSIONS IDENTIFIED ABOVE. AS A RESULT, THEY MAY NOT APPLY TO YOU. THIS WARRANTY GIVES YOU SPECIFIC RIGHTS, AND YOU MAY ALSO HAVE OTHER LEGAL RIGHTS WHICH MAY VARY FROM COUNTRY TO COUNTRY. BRP SHALL NOT BE HELD LIABLE IF PRODUCTS OR WARRANTY PARTS ARE NOT AVAILABLE IN CERTAIN COUNTRIES FOR REASONS OUTSIDE OF BRP’S CONTROL.

Neither the Ski-Doo Distributor/Dealer nor any other person has been authorized to make any affirmation, representation or warranty regarding the Product, other than those contained in this limited warranty, and if made, shall not be enforceable against BRP.

BRP reserves the right to modify this warranty at any time, being understood that such modification will not alter the warranty conditions applicable to the Products sold while this warranty is in effect.

3) EXCLUSIONS – ARE NOT WARRANTED

The following are not warranted under this limited warranty under any circumstances:

- Normal wear and tear;
- Routine maintenance items, tune ups, adjustments;
- Damage caused by negligence or failure to provide proper maintenance and/or storage, as described in the Operator's Guide;
- Damage resulting from removal of parts, improper repairs, service, maintenance, modifications or use of parts or accessories not manufactured or approved by BRP which in its reasonable judgement are either incompatible with the Product or adversely affect its operation, performance and durability, or resulting from repairs done by a person that is not an authorized servicing Ski-Doo Distributor/ Dealer;
- Damage caused by abuse, abnormal use, neglect, racing or operation of the Product on surfaces other than snow, or operation of the Product in a manner inconsistent with the recommended operation described in the Operator’s Guide;
- Damage resulting from accident, submersion, fire, snow or water ingestion, theft, vandalism or any act of God;
- Operation with fuels, oils or lubricants which are not suitable for use with the Product (see the Operator’s Guide);
- Damage resulting from rust, corrosion or exposure to the elements;
- Incidental or consequential damages, or damages of any kind including without limitation towing, storage, transportation expenses, telephone, rental, taxi, inconvenience, insurance coverage, loan payments, loss of time, loss of income; or time missed for downtime experience due to service work.
- And damage resulting from studs installed on tracks if the installation does not conform to BRP’s instructions.

4) WARRANTY COVERAGE PERIOD

This warranty will be in effect from (1) the date of delivery to the first retail consumer or (2) the date the Product is first put into use, whichever occurs first and for a period of:

- TWENTY-FOUR (24) CONSECUTIVE MONTHS, for private use owners and TWELVE (12) CONSECUTIVE MONTHS for

commercial use owners. However, the warranty coverage period on a snowmobile delivered between June 1st and December 1st of a given year will expire November 30th of the applicable year. A snowmobile is used commercially when it is used in connection with generating income or any work or employment during any part of the warranty period. A snowmobile is also used commercially when, at any point during the warranty period, it has commercial tags or is licensed for commercial use.

The repair or replacement of parts or the performance of service under this warranty does not extend the life of this warranty beyond its original expiration date.

Note that the duration and any other modalities of the warranty coverage are subject to the applicable national or local legislation in the customer's country.

5) CONDITIONS TO HAVE WARRANTY COVERAGE

This warranty coverage is available only if each of the following conditions has been fulfilled:

- The Product must be purchased as new and unused by its first owner from a Ski-Doo Distributor/Dealer authorized to distribute Ski-Doo products in the country or in the case of the EEA union of countries in which the sale occurred;
- The BRP specified pre-delivery inspection process must be completed, documented and signed by the purchaser;
- The Product must have undergone proper registration by an authorized Ski-Doo Distributor/Dealer;
- The Product must be purchased within the country or in the case of the EEA, union of countries in which the purchaser resides; and
- Routine maintenance outlined in the Operator’s Guide must be timely performed in order to maintain warranty coverage. BRP reserves the right to make warranty coverage contingent upon proof of proper maintenance.

BRP will not honour this limited warranty to any private use owner or commercial use owner if one of the preceding conditions has not been met. Such limitations are necessary in order to allow BRP to preserve both the safety of its products, and also that of its consumers and the general public.

6) WHAT TO DO TO OBTAIN WARRANTY COVERAGE

The customer must cease using the snowmobile upon the appearance of an anomaly. The customer must notify a servicing BRP snowmobile distributor/ dealer within two (2) months of the appearance of a defect,

and provide it with reasonable access to the product and reasonable opportunity to repair it. The customer must also present to the authorized Ski-Doo Distributor/ Dealer, proof of purchase of the Product and must sign the repair/work order prior to starting the repair in order to validate the warranty repair. All parts replaced under this limited warranty become the property of BRP.

Note that the notification period is subject to the applicable national or local legislation in customer's country.

7) WHAT BRP WILL DO

To the extent permitted by law, BRP's obligations under this warranty are limited to, at its sole discretion, repairing parts found defective under normal use, maintenance and service, or replacing such parts without charge for parts and labour, at any authorized Ski-Doo Distributor/Dealer during the warranty coverage period under the conditions described herein. BRP's responsibility is limited to making the required repairs or replacements of parts. No claim of breach of warranty shall be cause for cancellation or rescission of the sale of the snowmobile to the owner. You may have other legal rights which may vary from country to country.

In the event that service is required outside of the country of original sale, or for EEA residents, if a service is required outside of the EEA, the owner will bear responsibility for any additional charges due to local practices and conditions, such as, but not limited to, freight, insurance, taxes, license fees, import duties, and any and all other financial charges, including those levied by governments, states, territories and their respective agencies.

BRP reserves the right to improve or modify products from time to time without assuming any obligation to modify products previously manufactured.

8) TRANSFER

If the ownership of a Product is transferred during the warranty coverage period, this limited warranty, subject to its terms and conditions, shall also be transferred and be valid for the remaining coverage period provided BRP or an authorized Ski-Doo Distributor/Dealer receives a proof that the former owner agreed to the transfer of ownership, in addition to the coordinates of the new owner.

9) CONSUMER ASSISTANCE

In the event of a controversy or a dispute in connection with this limited warranty, BRP suggests that you try to resolve the issue at the Ski--Doo Distributor/Dealer level. We recommend discussing the issue with the authorized Ski-Doo Distributor/Dealer's service manager or owner.

If the matter still remains unresolved, contact BRP by filling out the customer contact form at **www. brp. com** or contact BRP by mail at one of the addresses listed under the *CONTACT US* section of this guide.

10) ADDITIONAL TERMS AND CONDITIONS FOR FRANCE ONLY

The following terms and conditions are applicable to products sold in France only:

The seller shall deliver goods that are complying with the contract and shall be responsible for defects existing upon delivery. The seller shall also be responsible for defects resulting from packaging, assembling instructions or the installation when it is its responsibility per the contract or if accomplished under its responsibility. To be compliant with the contract, the good shall:

1. Be fit for normal use for goods similar thereto and, if applicable:
   - Correspond to the description provided by the seller and have the qualities presented to the buyer though sample or model;
   - Have the qualities that a buyer may legitimately expect considering the public declarations of the seller, the manufacturer of its representative, including in advertising or labeling; or
2. Have the characteristics mutually agreed upon as between the parties or be fit for the specific use intended by the buyer and brought to the attention of the seller and which were accepted

The action for failure to comply is prescribed after two years after delivery of the goods. The seller is responsible for the warranty for hidden defects of the good sold if such hidden defects are rendering the good unfit for the intended use, or if they diminish its use in such a way that the buyer would not have acquired the good or would have given a lesser price, had he known. The action for such hidden defects shall be taken by the buyer within 2 years of the discovery of the defect.

CUSTOMER INFORMATION

DATA PRIVACY INFORMATION

Bombardier Recreational Products Inc., its affiliates and subsidiaries (“BRP”) is committed to protecting your privacy and support a general policy of openness about how we collect, use and disclose your personal information in the course of managing our relationship with you. **More details can be found by visiting BRP’s Privacy Policy at: https://brp. com/en/privacy-policy. html or by scanning the QR Code below.**

Please be assured that we have appropriate security measures in place to ensure that your personal information is protected against loss and unauthorized access.

Your personal information that may be collected by BRP, directly from you or from authorized dealers or authorized third parties, includes:

- **Contact, Demographic & Registration Information** (e.g., name, full address, phone number, email, gender, ownership history, language of communication)
- **Vehicle Information** (e.g., serial number, purchase and delivery date, unit usage, vehicle location and movements)
- **Third Party Information** (e.g., information received from BRP partners, joint marketing activities information, social media)
- **Technological Information** (e.g., IP address, type of device, operating system, browser type, webpages you view, cookies and similar technologies when you use BRP or dealers’ websites or mobile application)
- **Interaction with BRP Information** (e.g., information collected when you call BRP’s in-house sales representatives, buy items on a BRP website, sign up for BRP emails, participate in BRP-sponsored contests and sweepstakes or attend BRP-sponsored events)
- **Transactional Information** (e.g., information necessary to handle returns, payment information when you purchase our products or services through our websites or mobile applications and other issues related to your purchase of BRP products)

This information may be used and processed for the following purposes:

- Safety & Security
- Customer Support for Sales and After Sales (e.g., complete or follow up with you about your purchase or maintenance)
- Registration & Warranty
- Communication (e.g., sending you a BRP satisfaction survey)
- Online Behavioural Advertising, Profiling and Location-Based Services
  (e.g., offer customized experience)
- Compliance & Dispute Resolution
- Marketing & Advertising
- Assistance (e.g., help with any delivery issues, handle returns, and other issues related to your purchase of BRP products).

We also may use personal information to generate aggregated or statistical data that no longer identifies you personally.

Your personal information may be disclosed to the following: BRP, BRP's authorized dealerships, distributors, service providers, advertising and market research partners and other authorized third parties.

We may receive information about you from diverse sources, including third parties, such as BRP's authorized dealerships and partners, with whom we offer services or engage in joint-marketing activities. We may also receive information about you from social media platforms when you interact with us on those platforms.

Depending on the circumstances, your personal information may be communicated outside the region where you reside. Your personal information is retained only for as long as necessary for the purpose for which we obtained it and according to our retention policies.

To exercise your data privacy rights (e.g. right of access, right of rectification), to withdraw your consent in order to be removed from the address list for marketing purposes or for the satisfaction survey or for general data privacy questions, please contact BRP's Data Protection Officer at or by mail at **privacyofficer@brp.com** or by mail at:
BRP Legal Service, 726 St-Joseph, Valcourt, Quebec, Canada, J0E 2L0.

When BRP processes your personal information, they do so in compliance with its Privacy Policy available at: https://www.brp.com/en/privacy-policy.html or by using the following QR Code.

CONTACT US

www.brp.com

Asia Pacific

BRP Asia
107D and 107E, 17/F, Tower 1,
Grand Century Place, Mongkok,
Kowloon, Hong Kong

Australia
Level 26
477 Pitt Street
Sydney, NSW 2020

China
上海市徐汇区衡山路10号6号楼301
Rm 301, Building 6,
No.10 Heng Shan Rd,
Shanghai, China

Japan
21F Shinagawa East One Tower
2–16–1 Konan, Minato-ku-ku,
Tokyo 108–0075

New Zealand
Suite 1.6, 2–8 Osborne Street,
Newmarket, Auckland 2013

Europe, Middle East and Africa

Belgium
Oktrooiplein 1
9000 Gent

Czech Republic
Stefanikova 43a
Prague 5
150 00

Germany
Alte Papierfabrik 16
D-40699 Erkrath

Finland
Isoaavantie 7
PL 8040
96101 Rovaniemi

France
Arteparc Bâtiment B
Route de la côte d'Azur,
13 590 Meyreuil

Norway
Ingvald Ystgaardsvei 15
N-7484 Trondheim
Salg, marketing, ettermarked

Sweden
Spinnvägen 15
903 61 Umeå
Sweden 90821

Switzerland
Avenue d'Ouchy 4-6
1006 Lausanne

Latin America

Brazil
Av. James Clerck Maxwell, 230
Campinas, Sao Paulo
CEP 13069-380

Mexico
Av. Ferrocarril 202
Parque Industrial Querétaro
Santo Rosa Jauregui, Querétaro
C.P. 76220

North America

Canada
3200A, rue King Ouest,
Suite 300
Sherbrooke (Québec) J1L 1C9

United States of America
10101 Science Drive
Sturtevant, Wisconsin
53177

CHANGE OF ADDRESS/OWNERSHIP

If your address has changed or if you are the new owner of the snowmobile, be sure to notify BRP by either:

- Notifying an authorized BRP snowmobile dealer or distributor.
- **North America Only**: calling at 1 888 272-9222.
- Mailing one of the change of address cards on the following pages at one of the BRP addresses indicated in the *Contact Us* section of this guide.

In case of change of ownership, please join a proof that the former owner agreed to the transfer.

Notifying BRP, even after the expiration of the limited warranty, is very important as it enables BRP to reach the snowmobile owner if necessary, like when safety recalls are initiated. It is the owner's responsibility to notify BRP.

STOLEN UNITS: If your personal snowmobile is stolen, you should notify BRP or an authorized BRP snowmobile dealer. We will ask you to provide your name, address, phone number, the vehicle identification number and the date it was stolen.

This page is
intentionally blank

CHANGE OF ADDRESS ☐ CHANGE OF OWNERSHIP ☐

VEHICLE IDENTIFICATION NUMBER

Model Number

Vehicle Identification Number (V.I.N.)

OLD ADDRESS OR PREVIOUS OWNER:

NAME

NO. STREET APT

CITY STATE/PROVINCE ZIP/POSTAL CODE

COUNTRY TELEPHONE

NEW ADDRESS OR NEW OWNER:

NAME

NO. STREET APT

CITY STATE/PROVINCE ZIP/POSTAL CODE

COUNTRY TELEPHONE

E-MAIL ADDRESS

This page is
intentionally blank

CHANGE OF ADDRESS ☐ CHANGE OF OWNERSHIP ☐

VEHICLE IDENTIFICATION NUMBER

Model Number

Vehicle Identification Number (V.I.N.)

OLD ADDRESS OR PREVIOUS OWNER:

NAME

NO. STREET APT

CITY STATE/PROVINCE ZIP/POSTAL CODE

COUNTRY TELEPHONE

NEW ADDRESS OR NEW OWNER:

NAME

NO. STREET APT

CITY STATE/PROVINCE ZIP/POSTAL CODE

COUNTRY TELEPHONE

E-MAIL ADDRESS

This page is
intentionally blank

CHANGE OF ADDRESS ☐ CHANGE OF OWNERSHIP ☐

VEHICLE IDENTIFICATION NUMBER

Model Number

Vehicle Identification Number (V.I.N.)

OLD ADDRESS OR PREVIOUS OWNER:

NAME

NO. STREET APT

CITY STATE/PROVINCE ZIP/POSTAL CODE

COUNTRY TELEPHONE

NEW ADDRESS OR NEW OWNER:

NAME

NO. STREET APT

CITY STATE/PROVINCE ZIP/POSTAL CODE

COUNTRY TELEPHONE

E-MAIL ADDRESS

This page is
intentionally blank

NOTES

NOTES

NOTES

NOTES

NOTES

NOTES

NOTES

NOTES

NOTES

Model No. _____

VEHICLE
IDENTIFICATION NUMBER (V.I.N.) _____

ENGINE
IDENTIFICATION NUMBER (E.I.N.) _____

Owner: _____
NAME

_____
No. STREET APT

_____
CITY STATE/PROVINCE ZIP/POSTAL CODE

Purchase Date _____ | _____ | _____ | _____
YEAR MONTH DAY

Warranty Expiry Date _____ | _____ | _____ | _____
YEAR MONTH DAY

To be completed by the dealer at the time of the sale.

DEALER IMPRINT AREA

This page is intentionally blank

⚠ WARNING

Disregarding any of the safety precautions and instructions contained in the operators's guide, safety video and on product safety labels could cause injury including the possibility of death.

®TM and the BRP logo are trademarks of BOMBARDIER RECREATIONAL PRODUCTS INC. or its affiliates.
©2024 BOMBARDIER RECREATIONAL PRODUCTS INC. ALL RIGHTS RESERVED.

www.brp.com

ALUMACRAFT® **CAN-AM®** **LYNX®**

MANITOU® **QUINTREX®** **ROTAX®**

SEA-DOO® **SKI-DOO®**

520003291 Rev1