can-am

BRP

OUTLANDER AND OUTLANDER MAX SERIES (T CATEGORY)

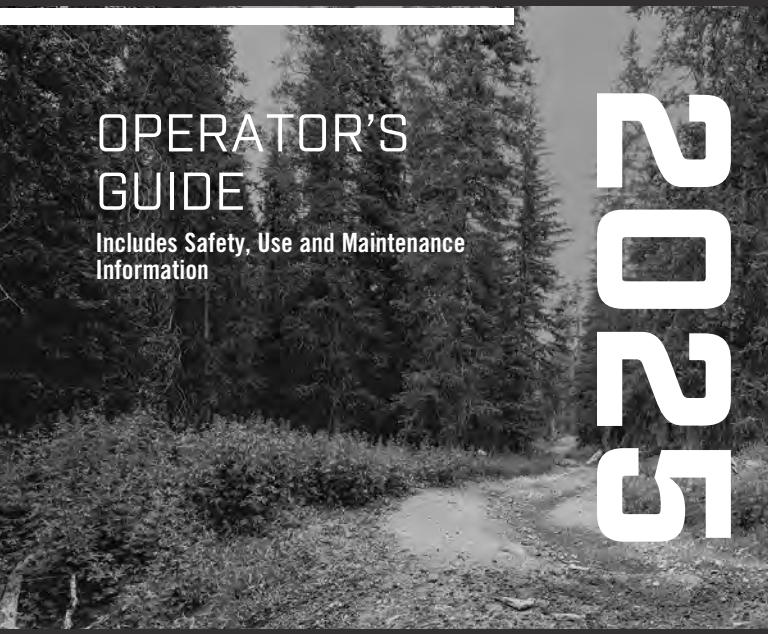

OPERATOR'S GUIDE

Includes Safety, Use and Maintenance Information

2025

⚠ WARNING

Read this operator's guide thoroughly. It contains important safety information.
Minimum recommended operator age: 16 or older.
Keep this operator's guide with the vehicle at all times.

219002408_REV1

Original Instructions

⚠ WARNING

YOUR VEHICLE CAN BE HAZARDOUS TO OPERATE. A collision or rollover can occur quickly, if you fail to take proper precautions, even during routine maneuvers such as turning and driving on hills or over obstacles.
For your safety, understand and follow all the warnings contained in this operator's guide and on the labels on your vehicle. Failure to follow these warnings can result in SEVERE INJURY OR DEATH.
Keep this operator's guide with the vehicle at all times.

⚠ WARNING

Disregarding any of the safety precautions and instructions contained in the Operators's Guide, SAFETY VIDEO and on product safety labels could cause injury including the possibility of death.

⚠ WARNING

This vehicle may exceed the performance of other vehicles you may have ridden in the past. Take time to familiarize yourself with your new vehicle.

All rights reserved. No parts of this operator's guide may be reproduced in any form without the prior written permission of Bombardier Recreational Products Inc.
©Bombardier Recreational Products Inc. (BRP) 2024

™® Trademarks of BRP or its affiliates.

This is a non-exhaustive list of trademarks that are the property of Bombardier Recreational Products Inc. or its affiliates.

Trademarks may not be registered in every jurisdiction.

Can-Am®	D.E.S.S.™	DPS®	LinQ®
Outlander™	ROTAX®	XPS®	

Deutsch	Dieses Handbuch ist möglicherweise in Ihrer Landessprache verfügbar. Bitte wenden Sie sich an Ihren Händler oder besuchen Sie: **www.operatorsguides.brp.com**
English	This guide may be available in your language. Check with your dealer or go to: **www.operatorsguides.brp.com**
Español	Es posible que este manual esté disponible en su idioma. Consulte a su distribuidor o visite: **www.operatorsguides.brp.com**
Français	Ce guide peut être disponible dans votre langue. Vérifier avec votre concessionnaire ou aller à: **www.operatorsguides.brp.com**
Italiano	Questa guida potrebbe essere disponibile nella propria lingua. Contattare il concessionario o consultare: **www.operatorsguides.brp.com**
中文	本手册可能有您的语种的翻译版本。请向经销商问询，或者登录 **www.operatorsguides.brp.com** 查询。
日本語	このガイドは、言語によって翻訳版が用意されています。. ディーラーに問い合わせるか、次のアドレスでご確認ください： **www.operatorsguides.brp.com**
Nederlands	Deze handleiding kan beschikbaar zijn in uw taal. Vraag het aan uw dealer of ga naar: **www.operatorsguides.brp.com**
Norsk	Denne boken kan finnes tilgjengelig på ditt eget språk. Kontakt din forhandler eller gå til: **www.operatorsguides.brp.com**
Português	Este manual pode estar disponível em seu idioma. Fale com sua concessionária ou visite o site: **www.operatorsguides.brp.com**
Русский	Воспользуйтесь руководством на вашем языке. Узнайте о его наличии у дилера или на странице по адресу **www.operatorsguides.brp.com**
Suomi	Käyttöohjekirja voi olla saatavissa omalla kielelläsi. Tarkista jälleenmyyjältä tai käy osoitteessa: **www.operatorsguides.brp.com**
Svenska	Denna bok kan finnas tillgänglig på ditt språk. Kontakta din återförsäljare eller gå till: **www.operatorsguides.brp.com**

Covered Models	
1–UP models	2–UP models
Outlander 500 DPS ABS 4x4 Outlander PRO HD5 STD 4x4 Outlander PRO HD5 XU 4x4	Outlander MAX 500 DPS ABS 4x4
Outlander 700 DPS ABS 4x4 Outlander PRO HD7 XU 4x4 Outlander PRO HD7 XU ABS 4x4	Outlander MAX 700 DPS ABS 4x4 Outlander MAX 700 XT ABS 4x4 Outlander MAX PRO HD7 XU 4x4

In Canada, products are distributed and serviced by Bombardier Recreational Products Inc. (BRP).

In the USA, products are distributed and serviced by BRP US Inc.

In the European Economic Area (which is comprised of the member states of the European Union plus the United Kingdom, Norway, Iceland and Liechtenstein), the Commonwealth of the Independent States (including Ukraine and Turkmenistan) and Turkey, products are distributed and serviced by BRP European Distribution S.A. and other affiliates or subsidiaries of BRP.

For all other countries, products are distributed and serviced by Bombardier Recreational Products Inc. (BRP) or its affiliates.

While reading this Operator's Guide, remember that:

⚠ WARNING
Indicates a potential hazard which, if not avoided, could result in serious injury or death.

TABLE OF CONTENTS

GENERAL INFORMATION

GENERAL INFORMATION 12
Know Before you Go 12
Safety Messages 13
About this Operator's Guide 13
Be A Responsible Rider.....14

SAFETY INFORMATION

GENERAL PRECAUTIONS 16
Avoid Carbon Monoxide Poisoning 16
Avoid Gasoline Fires and Other Hazards 16
Avoid Burns from Hot Parts.....17
Accessories and Modifications 17
SPECIAL SAFETY MESSAGES..... 18
2–UP Models – Driver's Responsibilities 20
2–UP Models – Passenger's Responsibility.....20
European Community 21
OPERATION WARNINGS 22
Operating Vehicle Without Proper Instruction 22
Age Recommendations 23
Physical Limitations of the Passenger.....24
Carrying a Passenger 25
Carrying More than one (1) Passenger.....26
Passenger(s) to sit on Front or Rear Racks.....27
Vehicle on Paved Surfaces 28
Riding Without Protective Gear 29
Drugs or Alcohol 30
Excessive Speeds 31
Wheelies, Jumps and Other Stunts 32
Vehicle Inspection 32
Frozen Waterways.....33
Proper Position on the Vehicle 33
Unfamiliar Terrain.....34
Operating on Excessively Rough, Slippery or Loose Terrain 35
Turning Improperly 36
Excessively Steep Hills.....37
Climbing Hills.....38
Down a Hill 39
Crossing or Turning on Hills 40
Stalling, Rolling Backwards or Dismounting While Climbing a Hill 41
Operating Over Obstacles 42
Skidding or Sliding.....43
Deep or Fast Flowing Water.....44
Operating in Reverse.....45
Tire Pressure.....46

Improper Modifications 47
Loading, Carrying or Towing Cargo 48
Transporting Flammable or Dangerous Material 49
PRE–RIDE INSPECTION 50
Pre-Ride Inspection Check List 50
RIDING THE VEHICLE 53
Riding Gear 54
Carrying a Passenger 55
Recreational Riding 56
Environment 57
Design Limitation 57
Off-Road Operation 58
Riding Techniques 58
MOVING LOADS AND DOING WORK 71
Working with Your Vehicle 71
Carrying Loads 71
Loading the Cargo Racks 73
Operating While Carrying a Load 73
Hauling a Load 74
Pulling a Trailer 75
IMPORTANT ON-PRODUCT LABELS (ALL COUNTRIES EXCEPT CANADA/UNITED STATES) 77
Safety Pictogram 77

VEHICLE INFORMATION

PRIMARY CONTROLS 98
HANDLEBAR 100
THROTTLE LEVER 100
BRAKE LEVER 100
BRAKE LOCK LEVER 101
BRAKE PEDAL 103
ENGINE STOP SWITCH 104
RF D.E.S.S. KEY AND POST 105
SECONDARY CONTROLS 107
THROTTLE LEVER CONTROL HOUSING 108
SHIFT LEVER 114
MULTIFUNCTION SWITCH 117
HORN BUTTON 128
INDICATOR LEDS 130
EQUIPMENT 131
SEAT 131
PASSENGER BACKREST 135
PASSENGER'S GRAB HANDLES 135
FOOTPEGS 136
FRONT STORAGE COMPARTMENT 137
TOOL KIT 141
CONSOLE 142

GLOVE BOX 145
SIDE PANEL 147
12–VOLT POWER OUTLET 149
CARGO RACKS 150
WINCH (If Equipped) 151
RECOVERY HOOKS 152
TRAILER HITCH 153
HITCH DRAW BAR 154
TRAILER CONNECTOR 157
4.5” DIGITAL DISPLAY 159
MULTIFUNCTION DISPLAY 159
Indicator Lamps 164
SETTINGS 166
DRIVING AID TECHNOLOGIES (IF EQUIPPED) 170
ABS (Anti-lock Brake System) 170
eCBS (Electronic Combined Brake System) 170
BTC (Brake Traction Control) 170
DTC (Drag Torque Control) 170
FUEL 171
Fuel Requirements 171
Vehicle Fueling Procedure 172
BREAK-IN PERIOD 174
Operation During Break-In 174
BASIC PROCEDURES 175
Waking Up the Electrical System 175
Starting the Engine 175
Changing Gear Selection 176
Parking the Vehicle and Applying the Parking Brake 177
SPECIAL PROCEDURES 178
Fuel Flooded Engine 178
Water Into the CVT 178
Vehicle is Turned Over 180
Vehicle is Immersed in Water 180
TUNE YOUR RIDE 181
Suspension Adjustment Guidelines 182
Suspension Adjustments 182
Dynamic Power Steering (DPS) Assist Level Adjustment (Models with DPS) 184
LIFTING THE VEHICLE 187
General Safety Information for Lifting 187
TRANSPORTING THE VEHICLE 190
Using Vehicle Power to Climb Onto Transporting Equipment 192
Using a Winch to Pull Vehicle Onto Transporting Equipment 193
Securing Vehicle for Transport 193
Getting Vehicle Out of Trailer 195

MAINTENANCE

MAINTENANCE SCHEDULE **198**
EPA Regulation - Canadian and USA Vehicles 198
Air Filter Maintenance Guideline 199
Types of Usage 199
Maintenance Schedule 201
Maintenance Records 217
MAINTENANCE PROCEDURES **225**
Resetting the Message: Maintenance Required 225
AIR FILTER 225
ENGINE OIL 231
ENGINE OIL FILTER 235
FUEL VENT BREATHER FILTER 237
RADIATOR 239
ENGINE COOLANT 241
EXHAUST SYSTEM 246
GEARBOX 248
FRONT DIFFERENTIAL 251
REAR FINAL DRIVE 254
SPARK PLUGS 256
CVT COVER 258
DRIVE BELT 262
DRIVE AND DRIVEN PULLEYS 265
BATTERY 266
FUSES 270
LIGHTS 272
DRIVE SHAFT BELLOW AND PROTECTOR 274
WHEEL BEARING 275
WHEELS AND TIRES 276
STEERING 277
SUSPENSION 278
BRAKES 278
VEHICLE CARE **283**
Vehicle Cleaning and Protection 283
STORAGE AND PRESEASON PREPARATION **285**
Storage 285
Preseason Preparation 286

TECHNICAL INFORMATION

INTENDED USE **288**
VEHICLE IDENTIFICATION **289**
Vehicle Identification Number 289
Engine Identification Number (EIN) 292
COMPLIANCE LABEL **293**
Emission Control Information (Typical) 293

Regulation (EU) 2016/1628 applicable for Non-Road Mobile Machineries 294
Trailer Hitch Compliance 295
Category 1 Vehicle 296
Ethanol Compliance Pictogram 298
TECHNICAL INFORMATION LABEL 299
Air Filter Maintenance Label 299
Park Position Pictogram 299
Brake Fluid Pictogram 300
BRP RF DESS POST GEN3 (CAN) 301
USA and Canada 301
Mexico 302
Brazil 302
Japan 303
Europe 303
NOISE EMISSION AND VIBRATION VALUES (ALL COUNTRIES EXCEPT CANADA/UNITED STATES) 308
EC-DECLARATION OF CONFORMITY 309
UK-DECLARATION OF CONFORMITY 310
EAC DECLARATION OF CONFORMITY 311

TECHNICAL SPECIFICATIONS

TECHNICAL SPECIFICATIONS – T CATEGORIES SERIES 314

PARTS CATALOG

ONLINE PARTS CATALOG 328

TROUBLESHOOTING

TROUBLESHOOTING GUIDELINES 330
Abnormal Metal-on-Metal Sound 330
Engine Does Not Turn 330
Engine Turns Over But Fails To Start 331
Engine Lacks Acceleration or Power 332
Engine Overheats 332
Engine Backfire 333
Engine Misfire 333
Vehicle Cannot Reach Full Speed 333
Shift Lever Is Hard To Move 334
The RPM Increases But The Vehicle Does Not Move 334
Reduced Power Steering Assist 335

WARRANTY

BRP LIMITED WARRANTY USA AND CANADA: 2025 CAN-AM® ATV.....338
US EPA EMISSION - RELATED WARRANTY.....342
CALIFORNIA EVAPORATIVE EMISSIONS CONTROL WARRANTY STATEMENT.....345
BRP INTERNATIONAL LIMITED WARRANTY: 2025 CAN-AM® ATV.....349
BRP LIMITED WARRANTY FOR THE EUROPEAN ECONOMIC AREA, THE COMMONWEALTH OF THE INDEPENDENT STATES AND TURKEY: 2025 CAN-AM® ATV.....354

CUSTOMER INFORMATION

DATA PRIVACY INFORMATION.....360
CONTACT US.....363
Asia Pacific.....363
Europe, Middle East and Africa.....363
Latin America.....364
North America.....364
CHANGE OF ADDRESS AND OWNERSHIP.....365

This page is intentionally blank

GENERAL INFORMATION

GENERAL INFORMATION

Congratulations on your purchase of a new Can-Am® ATV vehicle. It's backed by the BRP limited warranty and a network of authorized Can--Am dealers ready to provide the parts, accessories or service you may require.

At delivery, you were informed of the warranty coverage and signed the Pre-delivery Check List to ensure your new vehicle was prepared to your entire satisfaction.

Your dealer is committed to your satisfaction. If you need more information, please ask your dealer.

Know Before you Go

To learn how to reduce the risk of accident for you or bystanders, read this Operator's Guide before you operate the vehicle.

Also, read all safety labels on your vehicle and watch the *Safety Video* located at:

https://can-am.brp.com/off-road/safety

Or use the following QR code.

Failure to follow the warnings contained in this Operator's Guide can result in SERIOUS INJURY or DEATH.

Age Recommendation

This vehicle is a category G, always follow this age recommendation:

– A person under 16 years old should never operate this vehicle.
– Passenger on 2–UP models must be capable of keeping his feet on the footrests and his hands on grab handles at all times when seated on this vehicle.

Training Course

Never operate this vehicle without proper instruction. **Take a training course**. All operators should receive training from a certified instructor.

For more information about ATV safety, contact an authorized Can--Am dealer to find out about available training courses nearest you.

Safety Messages

The types of safety messages, what they look like and how they are used in this guide are explained as follows:

The safety alert symbol ⚠ indicates a potential injury hazard.

⚠ WARNING
Indicates a potential hazard which, if not avoided, could result in serious injury or death.

⚠ CAUTION
Indicates a hazardous situation which, if not avoided, could result in minor or moderate injury.

NOTICE
Indicates an instruction which, if not followed, could result in severely damaged vehicle components or other property.

About this Operator’s Guide

This Operator's Guide has been prepared to acquaint the owner/operator of a new vehicle with the various vehicle controls, maintenance and safe operating instructions. It is indispensable for the proper use of the product.

Keep this Operator's Guide in the vehicle as you can refer to it for things such as maintenance, troubleshooting and instructing others.

Note that this guide is available in several languages. In the event of any discrepancy, the English version shall prevail.

If you want to view and/or print an extra copy of your Operator's Guide, simply visit the following website:

www.operatorsguides.brp.com

The information contained in this document is correct at the time of publication. BRP, however, maintains a policy of continuous improvement of its products without imposing upon itself any obligation to install them on products previously manufactured. Due to late changes, some differences between the manufactured product and the descriptions and/or specifications in this guide may occur. BRP reserves the right at any time to discontinue or change specifications, designs,

features, models or equipment without incurring any obligation upon itself.

This Operator's Guide should remain with the vehicle when it is sold.

Be A Responsible Rider

At BRP, we believe there’s an opportunity for everyone in the powersports and marine communities to come together and rethink how we approach safety, riding etiquette, and the environment. We believe that when we empower all riders to ride responsibly — to look out for each other and safeguard our trails and playgrounds — we inspire an industry to welcome newcomers, build a more caring community and generate positive experiences.

Whether you ride on trails, roads, water or snow, BRP is committed to driving positive change. That’s why we’re making the Responsible Rider program a key part of our Corporate Social Responsibility initiative through action, education and community empowerment.

To learn more about Responsible Rider, including tips and tricks on safety, riding etiquette and the environment, visit:

– *CANAMOFFROAD.COM/RESPONSIBLE-RIDER/*

While reading this Operator’s Guide, remember that:

⚠ WARNING
Indicates a potential hazard which, if not avoided, could result in serious injury or death.

SAFETY INFORMATION

GENERAL PRECAUTIONS

Avoid Carbon Monoxide Poisoning

All engine exhaust contains carbon monoxide, a deadly gas. Breathing carbon monoxide can cause headaches, dizziness, drowsiness, nausea, confusion and eventually death.

Carbon monoxide is a colorless, odorless, tasteless gas that may be present even if you do not see or smell any engine exhaust. Deadly levels of carbon monoxide can collect rapidly, and you can quickly be overcome and unable to save yourself. Also, deadly levels of carbon monoxide can linger for hours or days in enclosed or poorly ventilated areas. If you experience any symptoms of carbon monoxide poisoning, leave the area immediately, get fresh air and seek medical treatment.

To prevent serious injury or death from carbon monoxide:

– Never run the vehicle in poorly ventilated or partially enclosed areas such as garages, carports or barns. Even if you try to ventilate engine exhaust with fans or open windows and doors, carbon monoxide can rapidly reach dangerous levels.
– Never run the vehicle outdoors where engine exhaust can be drawn into a building through openings such as windows and doors.

Avoid Gasoline Fires and Other Hazards

Gasoline is extremely flammable and highly explosive. Fuel vapors can spread and be ignited by a spark or flame many feet away from the engine. To reduce the risk of fire or explosion, follow these instructions:

– Use only an approved red gasoline container to store fuel.
– Use only the BRP LinQ container to transport fuel on vehicle.
– This container must be firmly secured in the front storage compartment using the LinQ system. No other red gasoline containers sold on the market is recommended.
– Never carry gasoline container(s) or any dangerous liquids on the cargo racks.
– Never fill the gasoline container on the vehicle. An electrical static discharge may ignite the fuel.
– For refueling the vehicle, strictly adhere to instructions in *Fuel*.
– Never start or operate the engine if the fuel cap is not properly installed.

Gasoline is poisonous and can cause injury or death.

– Never siphon gasoline by mouth.
– If you swallow gasoline, get any in your eye(s), or inhale gasoline vapor, see your doctor immediately.
– If gasoline spills on you, wash with soap and water and change your clothes.

Avoid Burns from Hot Parts

Certain components like brake rotors and exhaust components become hot during operation. Avoid contact with those parts during and shortly after operation to avoid burn wounds.

Accessories and Modifications

Any modifications or addition of accessories approved by BRP may affect the handling of your vehicle. It is important to take the time to get familiar with the vehicle once modifications are made to understand how to adapt your driving behavior accordingly.

Avoid installing equipment not specifically approved by BRP for the vehicle and avoid unauthorized modifications. These modifications and equipment have not been tested by BRP and may create hazards. For example, they could:

- Create a loss of control and increase risk of crash.
- Cause overheating or short circuits increasing the risk of fire or burn injuries.
- Affect the protection features provided by the vehicle.
- Affect the behavior of the trailer when the vehicle is transported.
- Cause a risk of losing objects on the road when transported.

Your vehicle may also become illegal to ride.

See your authorized BRP dealer for available BRP accessories for your vehicle.

For safety reasons, some BRP accessories must be installed by a BRP dealer but if you decide to install the accessory by yourself, when not required to be done by the dealer, it is important to follow all the instructions carefully and, if applicable, understand all the information on how to use the product or for servicing.

If the accessory has been installed on your vehicle by another person than you, BRP strongly recommends you to read the corresponding instruction sheet as there may be more for information on how to use it safely or for the servicing.

The instruction sheets can be found at this address:

- *HTTPS://INSTRUCTIONS.BRP.COM*

SPECIAL SAFETY MESSAGES

THIS VEHICLE IS NOT A TOY AND CAN BE HAZARDOUS TO OPERATE.

– This vehicle handles differently from other vehicles including motorcycles and cars. A collision or rollover can occur quickly, if you fail to take proper precautions, even during routine maneuvers such as turning and driving on hills or over obstacles.

SEVERE INJURY OR DEATH can result if you do not comply with the following instructions:

– Read this Operator's Guide and all on-product safety labels carefully and follow the operating procedures described. Watch and pay attention to the safety video before operating the vehicle.
– Always follow this age recommendation: A person under 16 years old should never operate this vehicle.
– Never take place on this vehicle without wearing an approved helmet of the proper size and other required riding gears. Refer to *RIDING GEAR* in *RIDING THE VEHICLE* for detailed information.
– Always inspect and confirm the safe operating condition of your vehicle prior to ride. Refer to *PRE-RIDE INSPECTION*. Always follow the maintenance schedules as described in this Operator's Guide. Refer to *MAINTENANCE*.
– On 1-UP models, do not make any modifications to accommodate a passenger or use racks to carry a passenger.
– Never carry a passenger on this vehicle unless you are operating a 2-UP model. Passenger(s) affect balance and steering and increase risk of losing control.
– Never operate this ATV after using drugs or alcohol, when tired or ill. This must be applied also to the passenger (if applicable). Your reaction time and judgement is greatly affected under these conditions. Always operate your ATV prudently.
– Never attempt wheelies, jumps, or other stunts.
– Never operate at excessive speeds. Always go at a speed that is proper for the terrain, visibility, and operating conditions, and your experience.
– Always go slowly and be extra careful when operating on unfamiliar terrain. Always be alert to changing terrain conditions when operating this vehicle.
– Never operate on excessively rough, slippery or loose terrain until you have learned and practiced the skills necessary to control this vehicle on such terrain. Always be especially cautious on these kinds of terrain.
– Always follow proper procedures for turning as described in *RIDING TECHNIQUES*.
– Never operate this vehicle on hills too steep for the vehicle or for your abilities.
– Always follow proper procedures for climbing hills as described in *RIDING TECHNIQUES*. Check the terrain carefully before you start up any hill. Never climb hills with excessively slippery or loose surfaces.

- Always follow proper procedures for going down hills and for braking on hills as described in *RIDING TECHNIQUES*. Check the terrain carefully before you start down any hill.
- Always follow proper procedures for crossing the side of a hill as described in *RIDING TECHNIQUES*. Avoid hills with excessively slippery or loose surfaces.
- Always use proper procedures if you stall or roll backwards when climbing a hill. To avoid stalling, use low gear and maintain a steady speed when climbing a hill. If you stall or roll backwards, follow the driving technique procedures as described in *RIDING TECHNIQUES*.
- Always check for obstacles before operating in a new area. Never attempt to operate over large obstacles, such as large rocks or fallen trees. Always follow proper procedures when operating over obstacles as described in *RIDING TECHNIQUES*.
- Always be careful when skidding or sliding. Learn to safely control skidding or sliding by practicing at low speeds and on level smooth terrain. On extremely slippery surfaces, such as ice, go slowly and be very cautious in order to reduce the chance of skidding out of control. If you are operating a 2-UP model and have a passenger on-board, never attempt skidding or sliding; overturn or passenger ejection may occur.
- Always be sure there are no obstacles or people behind the vehicle when you operate in reverse. When it is safe to proceed in reverse, go slowly. Take into account that on a 2-UP model the passenger can obstruct your view.
- Never exceed the stated load limits for this vehicle including operator, passenger (2-UP models), all other loads and added accessories. Cargo should be properly distributed and securely attached. Reduce speed and follow instructions in this guide for carrying cargo or pulling a trailer. Allow greater distance for braking.
- This vehicle is not designed for jumping, nor can it fully absorb the high impact energy generated during manoeuvres such as jumping which, can be passed on to you, the operator. Performing wheelies can cause the vehicle to flip over onto you. Both practices have a high risk for you and your passenger (2-UP models) and should be avoided at all times.
- Never operate this vehicle through deep or fast flowing water. Water should never exceed the center of the wheels. Remember that wet brakes may have reduced stopping ability. Test your brakes after leaving water, mud or snow. If necessary, apply them several times to let friction dry out the pads.
- Always keep in mind that braking distance is readily affected by but not limited to; weather and terrain conditions, braking system and tire conditions, vehicle speed and attitude, and vehicle load including towing. Remember to adjust your driving accordingly.
- BRP recommends sitting on your ATV when operating in reverse. Avoid standing up. Your weight could shift forward against throttle

lever, causing an unexpected acceleration and may lead to a loss of control.
- Never operate the vehicle if the controls do not function normally.
- Always maintain proper tire pressure. When replacing tires, use only the recommended tire size and type. For tire information, refer to *TECHNICAL SPECIFICATIONS* in this guide.
- Riding your vehicle too fast for your skills or the conditions may result in injury. Apply only enough throttle to proceed safely. Statistics show that mishaps and injury usually result from high speed turns. Always remember that this vehicle is heavy! Its pure weight alone may entrap you should it fall resulting in injury.
- Never modify this vehicle through improper installation or use of accessories. Only use BRP's approved accessories.
- Never exceed the stated load limits for this vehicle including operator, all other loads and added accessories. Cargo should be properly distributed and securely attached. Reduce speed and follow instructions in this manual for carrying cargo or pulling a trailer. Allow greater distance for braking.

2–UP Models – Driver’s Responsibilities

Driver must:

- Not forget is responsible for the safety of the passenger.
- Inform the passenger concerning the basic rules for a safe ride.
- Instruct the passenger to read the vehicle’s safety labels and to watch the *safety video*.
- Always practice the maneuvers described in this Operator's Guide without and with a passenger. Greater skills are required with a passenger.
- Always remember that the vehicle handling and stability may be affected when riding with a passenger. Safely reduce speed. Use proper judgement. If in doubt, do not attempt and disembark the passenger before executing any maneuver.
- Always remember that the vehicle braking distance may be longer when riding with a passenger. Allow greater distance for braking.
- Never carry passenger on a 2-UP model if the passenger seat is not properly installed.
- Never carry more than one (1) passenger. Do not allow passenger to sit anywhere else than the designated passenger's seat.
- Never carry a passenger if you judge his ability or judgement insufficient to concentrate on the terrain conditions and adapt accordingly.
- Never carry a passenger who has used drugs or alcohol, or is tired or ill. These slow reaction time and impair judgment.

2–UP Models – Passenger’s Responsibility

Passenger must:

- Be capable of resting his feet on the footrests and his hands on grab handles when seated on this vehicle.
- Never take place on this vehicle without wearing an approved helmet (including a chin guard) that fits properly. The passenger should also wear eye protection (goggles or face shield), gloves, boots, long sleeved shirt or jacket, and long pants.
- Be seated on the designated passenger's seat.
- Always keep hands on grab handles and feet on the footrests during operation. Never hold on to the operator.
- Never get up during vehicle operation. An excessive movement could cause loss of control.
- Pay attention to vehicle and operator movements.
- Don’t hesitate and tell the driver to slow down or stop if you feel uncomfortable or insecure for any reason.

European Community

On-Road Use

The following warning applies only in the European Countries where on-road usage is allowed.

SEVERE INJURY OR DEATH can result if you do not comply with the following instructions.

⚠ WARNING

- **Always refrain from speeding and substantially reduce vehicle speed when turning.**
- **Always respect the road traffic laws, even on a dirt or gravel road.**
- **Always use any other equipment as required by traffic law for slow moving vehicle.**

OPERATION WARNINGS

The following warning and their format have been requested by the United States Consumer Product Safety Commission and are required to be in the Operator's Guide for all ATVs.

The following illustrations are general representations only. Your model may differ.

Operating Vehicle Without Proper Instruction

⚠ WARNING

POTENTIAL HAZARD
Operating this vehicle without proper instruction.
WHAT CAN HAPPEN
The risk of an accident is greatly increased if the operator does not know how to operate this vehicle properly in different situations and on different types of terrain.
HOW TO AVOID THE HAZARD
Beginners and inexperienced operators should complete a training course. They should then regularly practice the skills learned during the course as well as the operating techniques described in this Operator's Guide.
For more information about a training course, contact an authorized Can-Am dealer.

Age Recommendations

⚠ WARNING

V00A1AQ

POTENTIAL HAZARD
Failure to follow the age recommendations for this vehicle.
WHAT CAN HAPPEN
A lack of respect for this age recommendation can lead to severe injury or death of the child.
Even though a child may be within the age group for which this vehicle is recommended, he may not have the skills, abilities, or judgment needed to operate this vehicle safely and may be involved in a serious accident.
HOW TO AVOID THE HAZARD
No one under 16 should operate this vehicle.

Physical Limitations of the Passenger

⚠ WARNING

2-UP Models Only

vmo2014-005-100

POTENTIAL HAZARD
Failure to respect the physical limitations of the passenger on 2-UP models.
WHAT CAN HAPPEN
A passenger that cannot completely lean his feet on footrests can be ejected when riding on uneven terrain.
HOW TO AVOID THE HAZARD
The passenger must be capable of keeping his feet on the footrests and his hands on grab handles at all times when he is seated on the vehicle.

Carrying a Passenger

⚠ WARNING

1-UP Models Only

V00A02Q

POTENTIAL HAZARD
Carrying a passenger on this vehicle.
WHAT CAN HAPPEN
Greatly reduces your ability to balance and control this vehicle. Could cause an accident, resulting in harm to you and/or your passenger.
HOW TO AVOID THE HAZARD
Never carry passenger. Even with a long seat that provides unrestricted operator movement, it is not designed nor intended to carry passenger(s).

Carrying More than one (1) Passenger

⚠ WARNING

2-UP Models Only

V00A1CQ

POTENTIAL HAZARD

Carrying more than one (1) passenger on this vehicle.

WHAT CAN HAPPEN

Carrying more than one (1) passenger reduces your ability to balance and control this vehicle.

Could cause an accident, resulting in harm to you and/or your passengers.

HOW TO AVOID THE HAZARD

Never carry more than one (1) passenger. Even with a long seat that provides unrestricted operator movement, the vehicle is not designed nor intended to carry more than one (1) operator and one (1) passenger. The passenger must use the designated passenger's seat when he is seated on the vehicle with feet firmly planted on footrests and always hold on to the grab handles.

Passenger(s) to sit on Front or Rear Racks

⚠ WARNING

V00A2DQ

POTENTIAL HAZARD
Allowing passenger(s) to sit on front or rear racks on this vehicle.
WHAT CAN HAPPEN
Allowing a passenger could:

- **Impair vehicle stability which could lead to a loss of control.**
- **Result in injury to passenger(s) from impact on hard surfaces.**
- **Cause an accident, resulting in harm to you and/or your passenger(s).**

HOW TO AVOID THE HAZARD
Never allow any passenger to sit on front or rear racks on this vehicle.

Vehicle on Paved Surfaces

⚠ WARNING

POTENTIAL HAZARD
Operating this vehicle on paved surfaces.
WHAT CAN HAPPEN
Paved surfaces may seriously affect handling and control of the vehicle, and may cause the vehicle to go out of control.
HOW TO AVOID THE HAZARD
If a road usage is allowed in your area, operate your vehicle on paved surfaces only for short distance and for the only purpose of moving the vehicle from an off-road usage to another.
Always operate your vehicle at low speed (never exceed 40 km/h (25 MPH) and reduce the speed before making a turn.
Always respect all road traffic laws when operating your vehicle on public roads or streets.

Riding Without Protective Gear

⚠ WARNING

POTENTIAL HAZARD
Riding this vehicle without wearing an approved helmet, eye protection and protective gear. On 2–UP models, passenger should also have an approved helmet with a chin guard.
WHAT CAN HAPPEN

- **Riding without an approved helmet increases the chances of a severe head injury or death in the event of an accident.**
- **Riding without eye protection can result in an accident and increases the chances of a severe injury in the event of an accident.**
- **Riding without protective gear increases the chances of severe injury in the event of an accident.**

HOW TO AVOID THE HAZARD
Always wear an approved helmet that fits properly. You should also wear:

- **Eye protection (goggles or face shield)**
- **Rigid chin guard**
- **Gloves and boots**
- **Long sleeved shirt or jacket**
- **Long pants.**

Drugs or Alcohol

⚠ WARNING

V00A07Q

POTENTIAL HAZARD
Using this vehicle with drugs or alcohol.
WHAT CAN HAPPEN
Could cause the passenger to fall off (2-UP models).
Could seriously affect your judgment.
Could cause you to react more slowly.
Could affect your balance and perception.
Could result in an accident or death.
HOW TO AVOID THE HAZARD
The operator and the passenger (2-UP models) should never use this vehicle with drugs or alcohol.

Excessive Speeds

⚠ WARNING

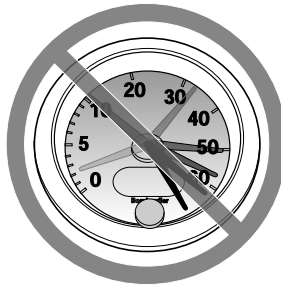

V00A08Q

POTENTIAL HAZARD
Operating this vehicle at excessive speeds.
WHAT CAN HAPPEN
Increases your chances of losing control of the vehicle, which can result in an accident.
HOW TO AVOID THE HAZARD
Always travel at a speed which is appropriate for the terrain, visibility and operating conditions, and your experience.
On 2-UP models, the vehicle handling, stability and braking distance may be affected when riding with a passenger. Safely reduce speed when riding with a passenger. Allow greater distance for braking.

Wheelies, Jumps and Other Stunts

⚠ WARNING

POTENTIAL HAZARD
Attempting wheelies, jumps and other stunts.
WHAT CAN HAPPEN
Increases the chance of an accident, including an overturn.
HOW TO AVOID THE HAZARD
Never attempt stunts, such as wheelies or jumps. Do not try to show off.

Vehicle Inspection

⚠ WARNING

POTENTIAL HAZARD
Failure to inspect the vehicle before operating.
Failure to properly maintain the vehicle.
WHAT CAN HAPPEN
Increases the possibility of an accident or equipment damage.
HOW TO AVOID THE HAZARD
Always inspect your vehicle prior to ride to make sure the vehicle is in safe operating condition.
Always follow the maintenance schedule described in this Operator's Guide.

Frozen Waterways

⚠ WARNING

POTENTIAL HAZARD
Riding on frozen waterways.
WHAT CAN HAPPEN
Breaking through the ice can lead to severe injury or death.
HOW TO AVOID THE HAZARD
Never ride this vehicle on a frozen surface before you are sure the ice is thick enough and sound enough to support the vehicle and its load, as well as the force that is created by a moving vehicle.

Proper Position on the Vehicle

⚠ WARNING

POTENTIAL HAZARD
Removing hands from handlebars for the operator and from grab handles for the passenger (2-UP models), or feet from the footrests during operation.
WHAT CAN HAPPEN
Removing even one hand or foot can reduce your ability to control the vehicle or could cause you to lose your balance and fall off the vehicle. If you remove a foot from the footrests, your foot or leg may come into contact with the rear wheels, which could injure you or cause an accident.
HOW TO AVOID THE HAZARD
Operator must always keep both hands on the handlebars and passenger (2-UP models) on grab handles. Both feet (operator and passenger on 2-UP models) must rest on the footrests during vehicle operation.

Unfamiliar Terrain

⚠ WARNING

POTENTIAL HAZARD
Failure to use extra care when operating this vehicle on unfamiliar terrain.
WHAT CAN HAPPEN
You can come upon hidden rocks, bumps, or holes, without enough time to react.
Could result in the vehicle overturning, passenger ejection (2-UP models) or loss of control.
HOW TO AVOID THE HAZARD
Go slowly and be extra careful when operating on unfamiliar terrain.
Always be alert to changing terrain conditions when operating the vehicle.
Do not forget, on 2-UP models, the operator is responsible for the safety of his passenger. Safely reduce speed when riding with a passenger.

Operating on Excessively Rough, Slippery or Loose Terrain

⚠ WARNING

POTENTIAL HAZARD
Failure to use extra care when operating on excessively rough, slippery or loose terrain.
WHAT CAN HAPPEN
Could cause loss of traction or vehicle control, which could result in an accident, including an overturn or passenger ejection (2-UP models).
HOW TO AVOID THE HAZARD
Do not operate on excessively rough, slippery or loose terrain until you have learned and practiced the skills necessary to control this vehicle on such terrain.
Always be especially cautious on these kinds of terrain.
Do not forget, on 2-UP models, the operator is responsible for the safety of the passenger. In doubt, disembark him before operating on these terrains.

Turning Improperly

⚠ WARNING

POTENTIAL HAZARD
Turning improperly.
WHAT CAN HAPPEN
Vehicle could go out of control, causing a collision or an overturn or a passenger ejection (2-UP models).
HOW TO AVOID THE HAZARD
Always follow proper procedures for turning as described in this Operator's Guide. Practice turning at low speeds before attempting to turn at faster speeds.
Do not forget, on 2-UP models, the operator is responsible for the safety of the passenger. Never perform this maneuver with a passenger. Always remember that the vehicle handling, stability and braking distance may be affected when riding with a passenger.
Do not turn at excessive speed.

Excessively Steep Hills

⚠ WARNING

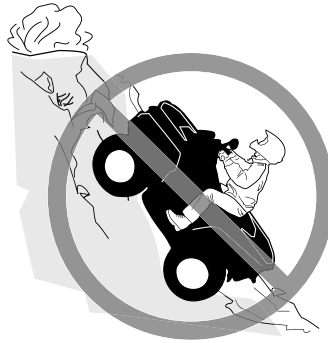

POTENTIAL HAZARD
Operating on excessively steep hills.
WHAT CAN HAPPEN
The vehicle can overturn more easily on extremely steep hills than on level surfaces or small hills.
HOW TO AVOID THE HAZARD
Never operate this vehicle on hills too steep for the vehicle or for your abilities.
Practice, without and with passenger (2-UP models), on smaller hills before attempting larger hills.
Always remember that, on 2-UP models, even if this vehicle can climb some steep hills, it is not recommended to climb such hills with a passenger; always disembark him before attempting this maneuver. Show good judgement.

Climbing Hills

⚠ WARNING

POTENTIAL HAZARD
Climbing hills improperly.
WHAT CAN HAPPEN
Could cause loss of control, passenger ejection (2-UP models) or cause vehicle to overturn.
HOW TO AVOID THE HAZARD
Always follow proper procedures for climbing hills as described in this Operator's Guide.
Always check the terrain carefully before you start up any hill.
Do not forget, on 2-UP models, the operator is responsible for the safety of the passenger. In doubt, disembark him before climbing hill. Always remember that the vehicle handling, stability and braking distance may be affected when riding with a passenger.
Never climb hills with excessively slippery or loose surfaces.
Shift your weight forward (operator and passenger on 2-UP models).
Never open the throttle suddenly or make sudden gear changes. The vehicle could flip over backwards.
Never go over the top of any hill at high speed. An obstacle, a sharp drop, or another vehicle or person could be on the other side of the hill.

Down a Hill

⚠ WARNING

POTENTIAL HAZARD
Going down a hill improperly.
WHAT CAN HAPPEN
Could cause loss of control, passenger ejection (2-UP models) or cause vehicle to overturn.
HOW TO AVOID THE HAZARD
Always follow proper procedures for going down hills as described in this Operator's Guide.

NOTE:
A special technique is required when braking as you go down a hill.

Always check the terrain carefully before you start down any hill. Do not forget, on 2-UP models, the operator is responsible for the safety of the passenger. In doubt, disembark him before going down hill. Always remember that the vehicle handling, stability and braking distance may be affected when riding with a passenger.
Shift your weight backward (operator and passenger on 2-UP models).
Never go down a hill at high speed.
Avoid going down a hill at an angle which would cause the vehicle to lean sharply to one side. Go straight down the hill where possible.

Crossing or Turning on Hills

⚠ WARNING

POTENTIAL HAZARD
Improperly crossing hills or turning on hills.
WHAT CAN HAPPEN
Could cause loss of control, passenger ejection (2-UP models) or cause vehicle to overturn.
HOW TO AVOID THE HAZARD
Never attempt this maneuver on 2-UP models when the passenger is on board. Always disembark him before executing.
Never attempt to turn the vehicle around on any hill until you have mastered the turning technique as described in this Operator's Guide on level ground. Be very careful when turning on any hill.
Avoid crossing the side of a steep hill if possible.
When crossing the side of a hill:
Always follow proper procedures as described further in this Operator's Guide.
Avoid hills with excessively slippery or loose surfaces.
Operator and passenger (2-UP models) must shift weight to the uphill side of the vehicle.

Stalling, Rolling Backwards or Dismounting While Climbing a Hill

⚠ WARNING

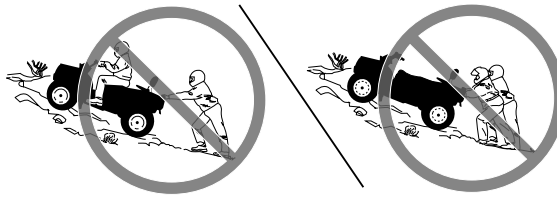

POTENTIAL HAZARD
Stalling, rolling backwards or improperly dismounting while climbing a hill.
WHAT CAN HAPPEN
Could result in vehicle overturning.
HOW TO AVOID THE HAZARD
Use low gear and maintain steady speed when climbing a hill.
If you lose all forward speed:

- **Operator and passenger (2-UP models) must keep their weight uphill. Never open the throttle suddenly or make sudden gear changes. The vehicle could flip over backwards.**
- **Apply the brakes.**
- **Apply the parking brake after you have stopped.**
- **Disembark on uphill side, or to a side if pointed straight uphill (passenger first on 2-UP models).**

If you begin rolling backwards:

- **Operator and passenger (2-UP models) must keep their weight uphill. Never open the throttle suddenly or make sudden gear changes. The vehicle could flip over backwards.**
- **Never apply the rear brake while rolling backwards.**
- **Apply the front brake gradually.**
- **When fully stopped, apply rear brake as well and apply the parking brake.**
- **Disembark on uphill side, or to a side if pointed straight uphill (passenger first on 2-UP models).**
- **Turn the vehicle around and remount, following the procedure described further in this Operator's Guide.**

Operating Over Obstacles

⚠ WARNING

POTENTIAL HAZARD
Improperly operating over obstacles.
WHAT CAN HAPPEN
Could cause loss of control (passenger ejection on 2-UP models), or a collision.
Could cause the vehicle to overturn.
HOW TO AVOID THE HAZARD
Before operating in a new area, check for obstacles.
Never attempt to ride over large obstacles, such as large rocks or fallen trees.
On 2-UP models, the operator is responsible for the safety of his passenger. In doubt, disembark him before riding over obstacles. Always remember that the vehicle handling and stability may be affected when riding with a passenger.
When you go over obstacles, always follow proper procedures as described in this Operator's Guide.

Skidding or Sliding

⚠ WARNING

POTENTIAL HAZARD
Skidding or sliding improperly.
WHAT CAN HAPPEN
You may lose control of this vehicle.
You may also regain traction unexpectedly, which may cause the vehicle to overturn or passenger ejection (2-UP models).
HOW TO AVOID THE HAZARD
Learn to safely control skidding or sliding by practicing at low speeds and on level smooth terrain.
On 2-UP models, never slide or skid with passenger. Always remember that the vehicle handling and stability may be affected when riding with a passenger.
On extremely slippery surfaces, such as ice, go slowly and be very cautious in order to reduce the chance of skidding or sliding out of control.

Deep or Fast Flowing Water

⚠ WARNING

POTENTIAL HAZARD
Operating this vehicle through deep or fast flowing water.
WHAT CAN HAPPEN
Tires may float, causing loss of traction and loss of control, which could lead to an accident.
HOW TO AVOID THE HAZARD
Never operate this vehicle in fast flowing water or in deep water.
Check water depth and current before you attempt to cross any water. Water should not go above the center of the wheels.
Remember that wet brakes may have reduced stopping ability. Test your brakes after leaving water. If necessary, apply them several times to let friction dry out the pads.

Operating in Reverse

⚠ WARNING

POTENTIAL HAZARD
Improperly operating in reverse.
WHAT CAN HAPPEN
You could hit an obstacle or person behind the vehicle, resulting in serious injury.
HOW TO AVOID THE HAZARD
When you select reverse gear, make sure there are no obstacles or people behind the vehicle. When it is safe to proceed, go slowly. On 2–UP models, take account that the passenger can obstruct your view.

Tire Pressure

⚠ WARNING

POTENTIAL HAZARD
Operating this vehicle with improper tires, or with improper or uneven tire pressure.
WHAT CAN HAPPEN
Use of improper tires on this vehicle, or operation of this vehicle with improper or uneven tire pressure, may cause loss of control, tire blow outs, tire to move around on its rim, and increases the risk of an accident.
HOW TO AVOID THE HAZARD
Always use the size and type of tires specified in this Operator's Guide for this vehicle.
Always maintain proper tire pressure as described in this Operator's Guide.
Always replace wheels or tires that are damaged.

Improper Modifications

⚠ WARNING

POTENTIAL HAZARD
Operating this vehicle with improper modifications.
WHAT CAN HAPPEN
Improper installation of accessories or modification of this vehicle may cause changes in handling which in some situations could lead to an accident.
HOW TO AVOID THE HAZARD
Never modify this vehicle through improper installation or use of accessories. All parts and accessories added to this vehicle should be approved by BRP and should be installed and used according to instructions. If you have questions, consult an authorized Can-Am dealer.
NEVER install an aftermarket passenger seat on a 1-UP models or use the racks to carry a passenger.
Modification of the vehicle to increase speed and performance may violate the terms and conditions of your vehicle limited warranty. In addition, certain modifications including the removal of engine or exhaust components are illegal under most laws.

Loading, Carrying or Towing Cargo

⚠ WARNING

POTENTIAL HAZARD
Overloading this vehicle, carrying or towing cargo improperly.
WHAT CAN HAPPEN
Could cause changes in vehicle handling which could lead to an accident.
HOW TO AVOID THE HAZARD
Never exceed the stated load capacity for this vehicle including operator and passenger (2-UP models) as well as other loads and added accessories.
Cargo should be properly distributed and securely attached.
Reduce speed when carrying cargo or pulling a trailer. Allow greater distance for braking.
Always follow the instructions in this Operator's Guide for carrying cargo or pulling a trailer.

Transporting Flammable or Dangerous Material

⚠ WARNING

V03M01Q

POTENTIAL HAZARD
Transporting flammable or dangerous material can lead to explosions.
WHAT CAN HAPPEN
This can cause serious injury or death.
HOW TO AVOID THE HAZARD
Never transport flammable or dangerous material.
Always use a BRP LinQ fuel container to transport fuel on vehicle. Only the approved BRP LinQ fuel container can be attached securely in the front storage compartment of the vehicle.

PRE–RIDE INSPECTION

Pre-Ride Inspection Check List

What to Do Before Starting the Engine (Key OFF)

Items to be Inspected	Inspection to Perform	✓
Engine oil	Check engine oil level.	
Coolant	Check coolant level.	
Brake fluid	Check brake fluid level	
Leaks	Check for any leaks under vehicle	
Throttle lever	Activate throttle lever several times to ensure it operates freely. It must return to idle position when released	
Brake lock lever	Engage the brake lock lever and check if it operates properly	
Engine air filter	Inspect and clean engine air filter	
Exhaust system	If not already done, clean the area surrounding the exhaust system, especially if during the last ride, the vehicle was used in a swamp, bog, hay or dead leaves.	
Radiator	Check cleanliness of the radiator	
Seat	Ensure the seat is properly locked in position by pulling (the front and the rear), back and up several time. Even if a distinctive snap is heard during the installation, always pull it back and up to confirm proper installation.	
	Check the passenger backrest and grab handles condition (2-UP Models)	
Storage compartment	Check if the front storage compartment is properly latched	
Tires	Check tire pressure and condition. Refer to the *Tire Pressure and Maximum Load* label and adjust according to load.	

Items to be Inspected	Inspection to Perform	✓
Wheels	Check wheels for damage and for abnormal play, and check lug nuts are tightened. Refer to *Wheels and Tires* in *Maintenance Procedures* for torque specification.	
Drive shaft bellows	Check drive shaft bellows and protectors condition	
Cargo	If you transport a cargo, respect the load capacity. Refer to *Loading the Cargo Racks*. Ensure cargo is properly secured to the racks	
	If you are pulling a trailer or another equipment: – Check hitch and trailer ball condition – Respect the tongue capacity and towing capacity as indicated on the label affixed to the hitch or refer to *Technical Specifications*. – Ensure trailer is properly secured to hitch.	
Chassis and suspension	Check underneath vehicle for any debris on chassis or suspension components and clean them properly	

What to Do Before Starting the Engine (Key ON)

Items to be Inspected	Inspection to Perform	✓
Display	Check operation of indicator lamps in display (during first few seconds of key ON).	
	Check for messages on display.	
Lights	Check operation and cleanliness of: – Headlights (High and Low) – Taillights – Brake lights – Turn signal lights – Position lights	

Items to be Inspected	Inspection to Perform	✓
	– Hazard lights.	
Fuel level	Check the fuel level.	
Horn	Check operation of the horn (If equipped).	

What to Do After the Engine is Started

Items to be Inspected	Inspection to Perform	✓
RF D.E.S.S. Post	Check if D.E.S.S. post is working properly by pulling the D.E.S.S. key from the D.E.S.S. post and stopping the engine. Reinstall the D.E.S.S. key and restart the engine.	
Engine stop switch	Check that the engine stop switch is working properly. Restart the engine.	
Steering	Check if steering operates freely by completely turning it from side to side	
Shift lever	Check operation of shift lever (P, R, N, H and L)	
Brakes	Drive forward slowly a few feet and apply brake lever and brake pedal individually. The brakes must fully apply. Lever and pedal must fully return when released	
2WD/4WD selector	Check operation of all modes: – 2WD – 4WD – 4WDLock (if equipped).	

RIDING THE VEHICLE

To fully appreciate the pleasures and excitement of riding this vehicle, there are some basic rules and tips that you MUST follow. Some may be new to you while others may be common sense or obvious.

Please take the time to study this Operator's Guide and all on-product safety labels as well as the safety video that came with this vehicle. They more completely describe what you should know about this vehicle before riding it.

Whether you are a new user or an experienced rider, it is important for your personal safety that you know the controls and features of this vehicle. Equally important is knowing how to properly ride.

This is a high performance ATV. Inexperienced riders may overlook risks and be surprised by the specific behavior of this ATV in any terrain condition.

If a road usage is allowed in your area, operate your vehicle on paved surface only for short distance and for the only purpose of moving the vehicle from an off-road usage to another. Always operate your vehicle at low speed (never exceed 40 km/h (25 MPH) and reduce the speed before making a turn.

Always respect all road traffic laws when operating your vehicle on public roads or streets. If you have to cross a road, the lead driver should get off his vehicle the observe and give direction to the other riders. The last person after crossing then assists the lead driver to cross.

Do not travel on sidewalks. They are designated for pedestrian use.

Information in this Operator's Guide is limited. It is strongly recommended that you obtain further information and training from your local authorities, ATV clubs, a recognized ATV training organization or contact an authorized Can-Am Off-road dealer.

We recommend following the age recommendation indicated on the safety label affixed on the unit. Even though a person may be within the age group for which this vehicle is recommended, he may not have the skills, abilities, or judgment needed to operate this vehicle safely and may be involved in a serious accident.

Individuals with cognitive or physical impairments or who are high risk takers have an increased exposure to overturns or collisions which may result in injury including death.

This vehicle is designed specifically to carry an operator only. Even with a long seat that provides unrestricted operator movements, it is not designed nor intended to carry passenger(s).

NEVER install an aftermarket passenger seat on a 1-UP models or use the racks to carry a passenger(s). Carrying passenger(s) may affect the stability and your control of the vehicle.

Not all vehicles are the same. Each has its own unique performance characteristics, controls and features. Each will ride and handle differently.

Become completely familiar with the operational controls and the general operation of the vehicle before venturing into off road conditions. Practice driving in a suitable area free of hazards and feel the response of each control. Drive at low speeds. Higher speeds require greater experience, knowledge and suitable riding conditions.

Riding conditions vary from place to place. Each is subject to weather conditions which may radically change from time to time and from season to season.

Riding on sand is different than riding on snow or through forests or marshes. Each location may require a greater degree of awareness and skill. Show good judgement. Always proceed with caution. Please do not take any unnecessary risks that could leave you stranded or possibly injured.

Never assume that the vehicle will go everywhere safely. Sudden changes in terrain caused by holes, depressions, banks, softer or harder “ground” or other irregularities may cause the vehicle to topple or become unstable. To avoid this, slow down and always observe the terrain ahead. If the vehicle does begin to topple or tip over, the best advice is to immediately get off, AWAY from the direction of the tip over!

We encourage you to have an Annual Safety Inspection of your vehicle. Please contact an authorized Can-Am Off-road dealer for further details. Though not required, it is recommended that an authorized Can-Am Off-road dealer performs the preseason preparation of your vehicle. Each visit to your authorized Can-Am Off-road dealer is a great opportunity for your dealer to verify if your vehicle is included in any safety campaign. We also urge you to visit your authorized Can--Am Off-road dealer in a timely manner if you become aware of any safety related campaigns.

See an authorized Can-Am Off-road dealer for available accessories you may require.

Riding Gear

Actual weather conditions should help you decide how to dress. Dress for the coldest weather expected. Thermal underwear next to the skin also provides a good insulation. It is important that the operator always wears the appropriate protective riding gear and apparel, including an approved helmet, eye protection, boots, gloves, a long sleeved shirt and pants. This type of clothing will provide you protection from some of the minor hazards you may encounter en route. The operator must never wear loose clothing such as a scarf that may get entangled in

the vehicle or on tree branches and shrubs. Depending on conditions, anti-fogging goggles or sunglasses may be required. Different colored lenses available for goggles or sunglasses help you distinguish terrain variations. Sunglasses should only be worn during the daytime.

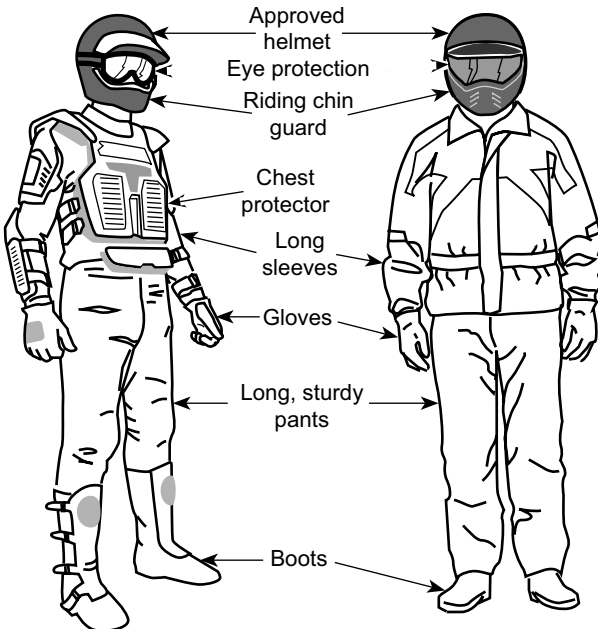

Riders with appropriate riding gear

Carrying a Passenger

1-UP Models

This vehicle is designed specifically to carry an operator only. Even with a long seat, this vehicle is not designed nor intended to carry passenger(s). NEVER install passenger seat or use the cargo area to carry passenger(s). Carrying passenger(s) may affect the stability and your control of the vehicle.

2-UP Models

This vehicle is designed specifically to carry an operator and ONE (1) passenger only. The passenger must be seated on the designated passenger's seat and hold on to the grab handles at all times. NEVER install other passenger's seat other than the one recommended by BRP. Do not use the racks or their location to carry passenger(s). Carrying more than one (1) passenger may affect the stability and your control of the vehicle. When the passenger seat is not installed, the vehicle becomes a ONE-RIDER vehicle (1-UP model) and NO PASSENGER must be allowed on it.

Recreational Riding

Respect the rights and limitations of others. Stay away from areas designated for other types of off road use. This includes snowmobile trails, equestrian trails, cross country ski trails, mountain bike trails, etc. Never assume there are no other users on the trail. Always stay to the complete right of the trail and do not zigzag to one side of the trail then the other. Be prepared to stop or pull off to the side if another trail user appears in front of you.

Join a local ATV club. It will provide you with a map and advice or inform you where you can ride. If a club does not exist in your area, help to start one. Group riding and club activities provide a pleasurable, social experience.

Always keep a safe distance from other riders. Your judgment of speed, terrain conditions, weather, mechanical condition of your vehicle and the “trust in judgment” you have in others around you will help you make a better choice of appropriate safe distance. This vehicle, like any other motorized vehicle, cannot stop “on a dime”.

On 2-UP models, the vehicle handling, stability and braking distance may be affected when riding with a passenger. Safely reduce speed when riding with a passenger.

Before you ride, tell someone where you are planning to travel and your expected time of return.

Depending on the length of your ride, carry additional tools , drinking water, food and emergency equipment. Find out where you can get additional gasoline and oil. Be prepared for the possible conditions you may encounter.

First aid kit	Adjustable wrench
Mobile phone	Knife
Friction tape	Flashlight

Rope or strap to free a stuck vehicle	Colored lens goggles
Snack	Trail map
Provided tool kit	Water

Environment

One of the benefits of this vehicle is that it can take you off the beaten path away from most communities. However, you should always respect nature and the rights of others to enjoy it. Do not ride in environmentally sensitive areas. Do not drive over forest crops or shrubs, nor cut down trees or take down fencing, nor spin your wheels and destroy the terrain. “Tread Lightly”.

This vehicle can cause OHV wildfires if debris builds up near the exhaust or other engine hot spots and ignites then falls off into dry grass. Avoid riding in wet areas, through muskeg or tall grass, where debris can build up. Should you ride in those areas, inspect and remove all debris from your engine and hot spots. Refer to *Vehicle Care* for details.

Chasing wildlife is in many areas illegal. Wildlife can die of exhaustion after being chased by a motorized vehicle. If you encounter animals on the trail, stop and observe quietly and with caution. It will be one of the better memories of your life.

Observe the rule “what you take in, carry out”. Do not litter. Do not start campfires unless you have permission to do so, and then only away from dry areas. The hazards you may create on the trail may cause injury to others or yourself, even at a later date.

Respect farm lands. Always obtain the permission of the landowner before riding on private land. Respect crops, farm animals and property lines.

Finally, do not pollute streams, lakes or rivers and do not modify the engine or exhaust system, or remove any of its components as it will alter the vehicle emissions.

Design Limitation

Although the vehicle is exceptionally rugged for its class, it is still a light vehicle by definition and its operation must be restricted to its proper purpose.

The addition of weight to any part of the vehicle changes its gravitational stability and modifies its performance.

Off-Road Operation

The very nature of off-road operation is dangerous. Any terrain, which has not been specially prepared to carry vehicles, presents an inherent danger where terrain substance, shape and steepness are unpredictable. The terrain itself presents a continual element of danger, which must be knowingly accepted by anyone venturing over it.

An operator who takes a vehicle off-road should always exercise the utmost care in selecting the safest path and keeping close watch on the terrain ahead of him. The vehicle should never be operated by anyone who is not completely familiar with the driving instructions applicable to the vehicle, nor should it be operated on steep or treacherous terrain.

Riding Techniques

Information in this guide is limited. Increase your knowledge and improve your skills by following a certified training course.

Care, caution, experience and driving skill are the best precautions against the hazards of vehicle operation.

Respect and follow all posted trail signs. They are there to help you and others.

In off-road operation, power and traction, not speed, are important. Never drive faster than visibility and your own ability to select a safe route permits.

Constantly watch the terrain ahead for sudden changes in slopes or obstacles, such as rocks or stumps, that may cause loss of stability, resulting in tip over or rollover.

It is also wise to know the terrain condition on the other side of a hill or bank. All too often there exists a sharp drop-off that is impossible to negotiate or descend.

Whenever there is the slightest doubt that the vehicle can safely negotiate an obstacle or a particular piece of terrain, always choose an alternate route.

Always use proper riding techniques to avoid vehicle overturns on hills and rough terrain and in turns.

Body Position

To maintain proper control, it is strongly advised that you keep your hands on the handlebar and within easy reach of all controls. The same holds true for your feet on the foot pegs. To minimize the possibility of a leg or foot injury, keep your feet on the foot pegs at all times. Do not direct your toes outwards nor extend your feet out to assist in

turning as they can be hit or be snagged on passing obstacles, or may come into contact with the wheels.

Even though there is a suspension on this vehicle, there are “wash-board” or rough terrain conditions that will make you feel uncomfortable and can even cause a back injury. “Posting” or riding in a crouched position will often be required. Slow down and allow your flexed legs to absorb part of the impact energy.

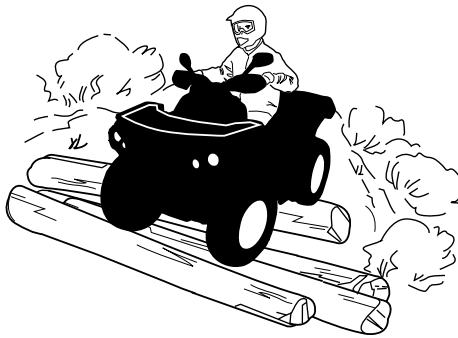

2–UP Models

The passenger must keep his hands on the grab handles and his feet on the footrests at all time.

The passenger must also synchronize his movements with the operator.

Crossing Roads

If you have to cross a road, ensure to have complete visibility on both sides for incoming traffic and decide on exit point on other side of road. Drive in a straight line toward that point. Do not make sharp direction changes or abrupt accelerations as it may result in a rollover situation. Do not travel on sidewalks or bicycle trails as they are designated specifically for those uses.

Turning

Practice turning at low speeds before attempting to turn at faster speeds.

Keep both hands on handlebars and feet on footpegs.

Maintain a constant speed or a slight acceleration during turn.

To reduce the risk of rollovers:

- Use care when turning.
  - Do not turn the handlebar too far or too fast for your speed and environment. Adjust steering inputs accordingly.
  - Slow down before entering a turn. Avoid hard braking during a turn.
  - Avoid sudden or hard acceleration when turning, even from a stop or low speed.
- Never attempt donuts, skids, slides, fishtails, jumps, or other stunts. If vehicle starts to skid or slide, steer in the direction of the skid or slide. Never slam the brakes and lock the wheels.
- Driving on paved surfaces is different from driving in Off-Road conditions. It requires a different approach in regards to the steering inputs and braking. Turn gradually, go slowly, and avoid abrupt acceleration and braking.

Avoid sudden inputs to steering, throttle or brakes while turning.

⚠ WARNING
Do not attempt turns at excessive speed.

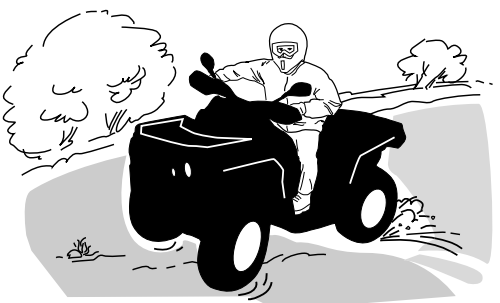

If you do get into a slide or skid, it may help to turn the handlebar in the direction of the skid until you regain control. Never jam the brakes and lock the wheels.

⚠ WARNING

The tires of this vehicle are not suited for paved road use. Also this vehicle is not equipped with a rear differential (rear wheels are always turning at the same speed). For these reasons, pavement may seriously affect the handling and control of the vehicle.

Braking

Always keep both hands on handlebars and feet on footpegs when braking.

Practice braking to get familiar with the brake response.

- Do it at low speed first, then increase the speed.
- Practice braking in straight line at different speeds and different braking force.
- Practice emergency braking; optimal braking is obtained in straight line, with high force applied, without locking the wheels.

Remember, braking distance depends on vehicle speed, load and the type of surface. Also, the tires and brakes conditions play a major role.

NOTE:
If going forward the vehicle weight is transferred to the front wheels when braking. To obtain greater stopping efficiency, the brake system distributes more braking force to the front wheels. This will affect vehicle handling and steering control when braking vigorously. Take it into account when braking.

Reverse Operation

When operating in reverse, check that the path behind the vehicle is free of people or obstacles. Proceed slowly and avoid sharp turns.

When riding on a 2-UP model, take into account that the passenger can obstruct your view. Disembark the passenger if necessary.

We recommend sitting on your ATV when operating in reverse. Avoid standing up. Your weight could shift forward against throttle lever, causing an unexpected acceleration.

⚠ WARNING

Unexpected acceleration when the ATV is operated in reverse can cause a loss of control.

Obstacles

Obstacles in the “trail” should be traversed with caution. This includes loose rocks, fallen trees, slippery surfaces, fences, posts, and embankments and depressions.

You should avoid them whenever possible. Remember that some obstacles are too large or dangerous to cross and should be avoided.

Small rocks or fallen trees may be safely crossed approach at a 90° angle.

Stand on the footrests while keeping your knees flexed. Adjust speed without losing momentum and do not “gun” the throttle.

Hold handlebar (operator) or grab handles (passenger on 2-UP models) firmly. Place body weight rearwards (operator and passenger 2-UP models) and proceed.

Do not try to lift the vehicle front wheels off the ground. Be aware that the object may be slippery or may move while crossing.

When riding on 2-UP models, the operator is responsible for the safety of the passenger; in doubt, disembark the passenger before proceeding.

Uphill Driving

1–UP Models

Before trying to climb a hill, keep these things in mind.

Hill climbing should only be attempted by experienced operators.

Start on shallow slopes.

Always drive straight uphill and keep your body weight forward towards the top of the hill.

Keep your feet on the footrests, shift your ATV into a lower gear and accelerate before you start to climb.

Try to keep a steady speed and go easy on the throttle to avoid acceleration.

Abrupt slope or terrain variation or rolling one wheel over an obstacle could have a big impact on the stability as it will lift the front of the vehicle increasing the risk of tipping over.

Some hills are too steep to safely stop or recover from after an unsuccessful climbing attempt.

Try to avoid steep inclines. If you're not careful, you could tip over when going up hills.

If the hill is too steep and you cannot proceed or the vehicle begins to roll backwards, apply the brake, being careful not to slide, apply the parking brake. Dismount on the left side then use the “K” turn (while walking back, next to the vehicle on the up hill side and with a hand on the brake lever, slowly back the rear of the vehicle toward the top of the hill then drive downhill).

Always walk or dismount on the upside of the slope while keeping clear of the vehicle and its rotating wheels.

Do not try to hold on to the vehicle if it begins to topple. Stay clear.

Do not ride over the crest of the hill at high speed. Obstacles, including sharp drop-offs, may exist.

2–UP Models

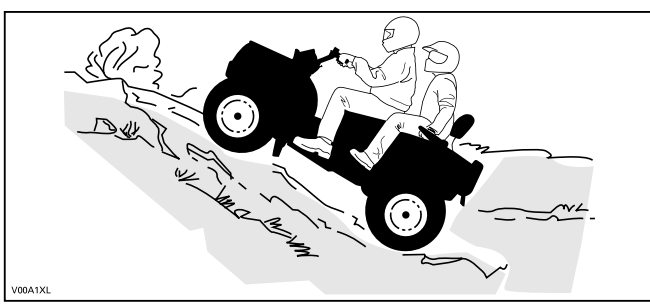

The passenger must synchronize his movements with the operator. The passenger must remain seated at all times.

Do not forget, the operator is responsible for the safety of the passenger. In doubt, disembark the passenger before climbing a hill.

Before trying to climb a hill, keep these things in mind. Hill Climbing should only be attempted by experienced operators.

Start on shallow slopes. Always drive straight uphill.

Operator and passenger must keep their body weight forward, towards the top of the hill. Keep feet on the footrests, shift the ATV into a lower gear and accelerate before you start to climb. Try to keep a steady speed and go easy on the throttle to avoid acceleration.

Abrupt slope or terrain variation or rolling one wheel over an obstacle could have a big impact on the stability as it will lift the front of the vehicle increasing the risk of tipping over.

Some hills are too steep to safely stop or recover from after an unsuccessful climbing attempt. Try to avoid steep inclines. If you're not careful, you could tip over when going up hills.

If the hill is too steep and you cannot proceed or the vehicle begins to roll backwards, apply the brake, being careful not to slide and apply the parking brake. Ask the passenger to dismount first, then use the “K” turn (while walking back, next to the vehicle on the up hill side and with a hand on the brake lever, slowly back the rear of the vehicle toward the top of the hill then drive downhill). Always walk or dismount on the upside of the slope while keeping clear of the vehicle and its rotating wheels.

Do not try to hold on to the vehicle if it begins to topple. Stay clear. Do not ride over the crest of the hill at high speed. Obstacles, including sharp drop-offs, may exist.

The passenger should get on the vehicle only when the vehicle has returned to a safe location.

Vehicle Behaviors

Due to configuration, this vehicle has excellent climbing ability, so much so that it is possible to tip over before traction is lost. For example, it is common to encounter terrain situations where the top of the hill has eroded to a point that the hill peak rises very sharply. The vehicle can readily negotiate such a condition, however, in doing so, when the front of the vehicle is driven to a point that the vehicle's balance moves rearward, a tip over can occur.

The same situation may apply if an embedded object causes the front of the vehicle to climb more than desired. If such a situation occurs take an alternate route. Be aware of side hilling dangers when doing so. Refer to .

Downhill Driving

1–UP Models

Keep your body weight rearwards. Stay seated. Apply the brake gradually to prevent skidding. Do not “coast” down the slope using solely engine compression or in neutral gear.

Decelerating while negotiating a slippery downhill slope could “toboggan” the vehicle. Maintain steady speed and/or accelerate slightly to regain control. Try to avoid steep inclines. If you're not careful, you could tip over when going down hills.

2–UP Models

The operator is responsible for the safety of the passenger; in doubt, disembark the passenger before proceeding.

Always remember that the vehicle handling, stability and braking distance may be affected when riding with a passenger.

The passenger must synchronize his movements with the operator. The passenger must remain seated at all times.

Operator and passenger must keep their body weight rearwards. Apply the brake gradually to prevent skidding. Do not “coast” down the slope using solely engine compression or in neutral gear. Try to avoid steep inclines. If you're not careful, you could tip over when going down hills.

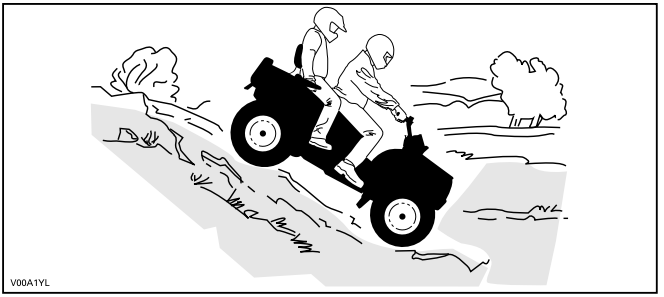

Vehicle Behaviors

This vehicle can climb slopes that are steeper than it can safely descend. Therefore, it is essential to ensure that a safe route exists to descend a slope before you climb it.

Side Hilling

This is one of the **most risky** types of riding because it can drastically change the balance of the vehicle. It should be avoided whenever possible. However, if it is necessary to do so, it is important that you ALWAYS keep your body weight on the upside of the slope and be prepared to dismount on that side should the vehicle begin to topple.

Avoid all objects or depressions that will intensify the raising of one side of the vehicle higher than the other, thus causing rollover.

⚠ WARNING

Do not try to stop or save the vehicle from damage.

⚠ WARNING

Be careful when loading and transporting liquid reservoirs. They can affect vehicle stability when side hilling by pulling downhill and increasing the risk of a rollover.

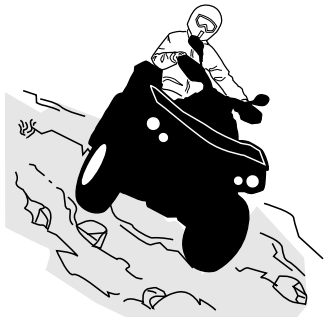

2–UP Models

The passenger must synchronize his movements with the operator. The passenger must remain seated at all times.

The operator is responsible for the safety of the passenger; when in doubt, disembark the passenger before proceeding.

Drop-Offs

⚠ WARNING
Avoid negotiating drop-offs. Reverse and select an alternate route.

This vehicle will “bottom out” and usually stop if either the front or rear wheels are driven over a drop-off. If the drop is sharp or deep, the vehicle will nose dive and tip over.

When riding on a 2– UP model, the operator is responsible for the safety of the passenger; in doubt, disembark the passenger before processing.

Crossing Water

Water can be a unique hazard. If it is too deep the vehicle may “float” and topple. Check the water depth and current before you attempt to cross any water.

Water should not go above the middle of the wheels.

Be wary of slippery surfaces such as rocks, grass and logs, both in the water and on its banks. A loss of traction may occur. Do not attempt to

enter the water at high speed. The water will act as a brake and could throw you off the vehicle, on the ground.

Wet brakes will affect the braking ability of your vehicle. Make sure you dry the brakes by applying them several times after the vehicle leaves the water, mud or snow. Allow greater distance for braking.

Mud or marsh lands may be encountered near water. Be prepared for sudden “holes” or changes in depth. Similarly, be watchful of hazards such as rocks and logs that are partially covered by vegetation.

Riding on Ice

If your route crosses frozen waterways, make sure the ice is thick enough and sound enough to support the total weight of yourself, your passenger (2-UP models), the vehicle and its load. Be ever watchful of open water it is a sure indication that the ice thickness will vary.

On 2-UP models, the operator is responsible for the safety of the passenger; in doubt, do not attempt to cross.

Ice will also affect the control of the vehicle. Slow down and do not “gun” the throttle. This will only result in spinning of the tires and possible tip over of the vehicle or passenger ejection (2-UP models).

Avoid rapid braking. This again will possibly result in an uncontrolled slide and tip over of the vehicle or passenger ejection (2-UP models).

Slush should be avoided at all times since it could block the operation or controls of the vehicle.

Riding on Snow Covered Surfaces

When performing the pre-ride inspection, pay special attention to locations on the vehicle where snow and/or ice accumulations may obstruct visibility of the taillight and reflectors, clog ventilation openings, block the radiator and fan, and interfere with the movement of control

levers, switches and brake pedal. Before starting with your ATV check the steering, throttle and brake lever and pedal controls for interference free operation.

Whenever an ATV is ridden on a snow covered drive path the tire grip is generally reduced causing the vehicle to react differently to control inputs from the operator. On low grip surfaces, the steering responses are not as crisp and precise, stopping distances are lengthened and acceleration becomes sluggish. Slow down and do not "gun" the throttle. This will only result in spinning of the tires and possibly in an over steering slide of the vehicle. Avoid hard braking. This will possibly result in a straight line slide of the vehicle. Again, the best advice is to safely reduce speed in anticipation of a maneuver so to give yourself time and distance to regain total vehicle control before it spins out of your control.

As you drive your ATV over a loose snow covered surface, snow dust will be picked up in the wake turbulence of the moving vehicle and transported to contact and accumulate or melt on some exposed components including rotating parts like brake discs. Water, snow or ice may affect the response time of the brake system of your ATV. Even when not required to reduce vehicle speed apply brakes frequently to prevent ice or snow accumulation and to dry brake pads and discs. While doing so in low risk driving situations you will test for grip level and keep yourself alerted to how the vehicle reacts to your control inputs. Always keep brake pedal, footrests, floor boards, brake and throttle levers free of snow and ice. Frequently wipe snow off seat, hand grips, headlights, taillights and reflectors.

The depth of the snow cover may hide rocks, tree stumps or other objects and if it is wet may totally impede the driveability as the vehicle becomes bogged down or completely looses traction in slushy snow. Look far ahead and always be watchful of any visible clues that might indicate the presence of such obstacles. In doubt steer clear. Avoid driving on any frozen body of water before checking that the ice will safely support the ATV, its riders and its load of cargo. Remember that a given thickness of ice may be sufficient to support a snowmobile but not an ATV of an identical weight because of the smaller load bearing surface of the four tire contact patches as compared to that of a snowmobile track and skis.

To maximize comfort and avoid frostbite, always wear clothing and ATV protective equipment appropriate for the weather conditions you will be exposed to during your ride.

At the end of each ride it is a good practice to clean the vehicle body and all moving components (e.g., brakes, steering components, drivelines, radiator fan and controls) from any snow or ice accumulations. Wet snow will turn to ice during the shut down period and become more difficult to remove at the next pre-ride inspection.

Riding in snow may reduce the brakes stopping capability. Safely reduce speed and allow greater distance for braking. Snow projection may cause ice build up or snow accumulation on brake components and controls. Apply brakes frequently to prevent ice or snow accumulation.

Riding on Sand

Riding on sand or sand dunes is another unique experience, but there are some basic precautions that should be observed.

Wet, deep or fine sand may create a loss of traction and cause the vehicle to slide, drop off or become “bogged” down.

If this occurs look for a firmer base. Again, the best advice is to slow down and be watchful of the conditions.

Slow down even more when riding with a passenger.

Always remember when riding that the vehicle handling and stability may be affected when riding with a passenger.

When riding in sand dunes it is advisable to equip the vehicle with an antenna-type safety flag. This will help make your location more visible to others over the next sand dune.

Proceed carefully should you see another safety flag ahead.

Since the antenna type safety flag can snag and rebound on your body if caught, do not use it in areas where there are low hanging branches or obstacles.

Riding on Loose Stones

Riding on loose stones or gravel is very similar to riding on ice. They will affect the steering of vehicle possibly causing it to slide or tip over, especially at high speeds (resulting in operator and passenger ejection (2–UP models)).

Again, the best advice is to slow down and be watchful of the conditions. When you ride with a passenger (2– UP models), slow down even more.

In addition, braking distance may be affected. Remember that “gunning” the throttle or sliding may cause loose stones to be ejected rearwards into the path of another rider. Never do it deliberately.

MOVING LOADS AND DOING WORK

Working with Your Vehicle

Your vehicle can help you perform a number of different LIGHT tasks ranging from snow removal to pulling wood or carrying cargo. A variety of accessories are available from your authorized Can-Am Off-road dealer. To prevent possible injury, follow the instructions and warnings that accompany the accessory. Always respect the load limits of the vehicle. Overloading the vehicle can overstress the components and cause failure. Avoid overexerting yourself if you lift or pull heavy loads or manually push the vehicle.

⚠ WARNING

Mounted machinery must be lowered on the ground before leaving the vehicle.

Carrying Loads

⚠ WARNING

- **NEVER exceed 90 km/h (55 MPH) if total load is more than 163 kg (360 lb).**

Any load carried on the vehicle including the operator, a passenger (2-UP models) and/or the carrying rack (s) will affect the handling, stability and braking distance of the vehicle.

Do not exceed the total load allowed for this vehicle, including the weight of operator and passenger, cargo, accessories and trailer tongue weight. Refer to *Technical Specifications*.

Always make sure the cargo is secured, properly distributed (1/3 of cargo weight in front and 2/3 of cargo weight in back) and cannot interfere with your proper control or lights.

Always make sure that the driver's visibility is not obstructed by objects carried on the front rack.

Always be aware that the “cargo” may slide or fall off and cause an accident.

Avoid cargo that may protrude sideways and get snagged or caught in bushes or other obstacles.

Safely reduce speed according to terrain conditions when carrying cargo or pulling a trailer.

Allow greater distance for braking.

Always secure cargo as low as possible on the rear rack to reduce the effect of a higher center of gravity.

⚠ WARNING

The vehicle handling, stability and braking distance are affected when loading racks and using the vehicle. Correct loading and weight distribution are therefore important. Never overload, tow or carry cargo improperly. Always ensure the cargo is safely secured and properly distributed on the rack(s) before operating the vehicle. Safely reduce speed according to terrain conditions when carrying cargo or pulling a trailer, and avoid hills and rough terrain. Allow greater distance for braking, especially on inclined surfaces and when a passenger (2-UP models) is on board. Be careful not to skid or slide. Always secure cargo as low as possible on the rack(s) to reduce the effect of a higher center of gravity. Failure to follow the recommendations here could cause changes in vehicle handling which could lead to an accident.

Maximum Payload Table			
Total payload allowed	1-UP models	234 kg (517 lb)	Includes weight of operator, passenger, cargo, accessories and tongue load.
	2-UP Models	272 kg (600 lb)	
Front load		54 kg (120 lb)	Evenly distributed. Includes front rack, glove box and front storage compartment.
Rear load		109 kg (240 lb)	Evenly distributed. Includes rear rack and tongue load.

Example of Suitable Vehicle Total Loads (Models with 234 kg (517 lb) total load)				
Total vehicle payload	**Operator and passenger**	**Cargo load**	**Accessories**	**Tongue load**
234 kg (517 lb)	100 kg (220 lb)	104 kg (229 lb)	10 kg (22 lb)	20 kg (44 lb)

Loading the Cargo Racks

Load cargo as low as possible – a higher load can raise the vehicle's center of gravity, which can reduce stability. Position cargo on the rack as evenly distributed as possible.

Secure the load on the cargo rack. Do not secure cargo to other parts of the vehicle. If it is not properly secured, a load may slide or fall off, possibly striking occupants or bystanders; or it may shift during riding, affecting the handling of the vehicle.

Objects that are high may affect visibility for the driver and may act as projectiles in case of an accident. Loads that protrude sideways can get snagged or caught in bush, branches or other obstacles. Avoid covering and obstructing the brake lights with the cargo. Ensure no cargo protrudes outside the cargo rack and that cargo will not interfere with your visibility or control of the vehicle.

NOTICE

Do not exceed the cargo racks capacity. Always refer to the safety labels on the vehicle.

Never carry gasoline container(s) or any dangerous liquids on the cargo rack(s).

Only an approved BRP LinQ fuel container can be attached securely in the front storage compartment of the vehicle.

Operating While Carrying a Load

Reduce your speed when carrying cargo and turn gradually.

Avoid hills and rough terrain.

Allow more distance for braking.

This vehicle may require additional stopping distance if carrying heavy loads, especially on inclined surfaces.

Keep stabilizer bar locked on both sides when driving on roads. It will reduce the tilting of the vehicle in winding road. Refer to *Tune Your Ride* for complete procedure.

Adjust the suspension accordingly.

Position the shift lever to L (LOW) position.

Hauling a Load

Never pull a load by attaching it to the bumper; this can cause the vehicle to tip over. Use only the trailer hitch (if installed) to pull a load.

In an emergency situation, use the recovery hook to recover a stuck vehicle, refer to *Recovery Hooks*.

When pulling loads with a chain or cable:

– Ensure that there is no slack before starting and maintain tension while pulling.
– Be sure to brake progressively. The inertia of the load could lead to an impact.

⚠ WARNING

A slack in the chain or cable can cause it to break and snap back.

When hauling a load, respect the maximum hauling capacity, refer to *Pulling a Trailer*.

When pulling another vehicle, be sure that someone is controlling the pulled vehicle. They must brake and steer to prevent the vehicle from going out of control.

Reduce your speed when hauling a load and turn gradually.

Avoid hills and rough terrain.

Never attempt steep hills.

Allow more distance for braking, especially on inclined surfaces and when a passenger (2-up models) is on board.

Be careful not to skid or slide.

Pulling a Trailer

Check the maximum axle loads of the vehicle identification plate (statutory plate).

Can-Am T category tractor can tow a trailer on the road. Check the trailer maximum load on its identification plate.

Check regulations for your area regarding the use of a tractor and trailer on the road.

Connect the trailer lights.

NOTICE

A BRP approved rear hitch must be properly installed on the vehicle for hauling trailers.

Riding this vehicle with a trailer substantially increases the risk of toppling, especially on inclined slopes. If a trailer is used behind the vehicle make sure that its hitch is compatible with the one on the vehicle. Make sure the trailer is horizontal with the vehicle. (In some instances a special extension may have to be installed on the vehicle hitch). Use security chains or cables to secure the trailer with the vehicle.

Reduce your speed when pulling a trailer and turn gradually. Avoid hills and rough terrain. Never attempt steep hills. Allow more distance for braking, especially on inclined surfaces and when a passenger (2-up models) is on board. Be careful not to skid or slide.

Improperly loading a trailer may cause a loss of control.

Do not exceed the towing capacity or tongue capacity. Refer to *Technical Specifications*.

Make sure there is at least some weight on the tongue.

Always make sure load is evenly distributed and safely secured on the trailer; an evenly balanced trailer is easier to control.

Always put the shift lever to L (low range) for hauling a trailer – in addition to providing more torque, operating in low range helps account for the increased load on the rear tires.

When stopped or parked, block the vehicle and trailer wheels from possible movement.

Use caution when disconnecting a loaded trailer; it or its load may topple on you or others.

When hauling a trailer, respect the maximum hauling capacity indicated on the label on the hitch.

The towing capacity includes the trailer weight.

⚠ WARNING

Stay clear from the area between the vehicle and the trailed vehicle.

⚠ WARNING

Strictly follow the instructions outlined in the user's guide of the mounted or trailed machinery or trailer, and not to operate the combination vehicle - machine or vehicle - trailer unless all instructions have been followed.

IMPORTANT ON-PRODUCT LABELS (ALL COUNTRIES EXCEPT CANADA/UNITED STATES)

This vehicle comes with a hang tag and labels containing important safety information.

Any person who rides this vehicle should read and understand this information before riding.

Safety Pictogram

Read and understand all the safety labels on your vehicle.

These labels are affixed to the vehicle for the safety of the operator, passenger (2-UP) or bystanders.

The safety labels on your vehicle should be considered permanent parts of the vehicle.

If missing or damaged, they can be replaced free of charge. See an authorized Can-Am Off-road dealer.

IMPORTANT: In the event of any discrepancy between this guide and the vehicle, the safety labels on the vehicle have precedence over the labels in this guide.

General Warning Label

1-UP Models

⚠ WARNING

- **Locate and read operator's guide. Improper ATV use can result in SEVERE INJURY or DEATH. Follow all instructions and warnings.**
- **Reduce speed on roads.**
- **Distribute weight and cargo evenly on the vehicle, refer to operator's guide.**
- **Watch the safety video before riding.**
- **Always wear ear protection.**
- **Always use an approved helmet and protective gear.**
- **Never carry a passenger on this 1-up vehicle.**
- **Never use with drugs or alcohol.**

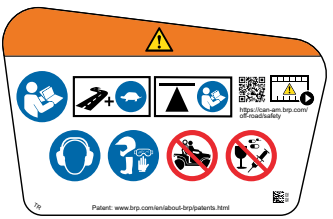

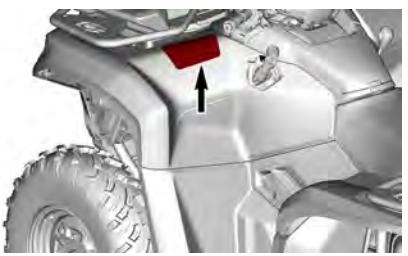

2-UP Models

⚠ WARNING

- **Locate and read operator's guide. Improper ATV use can result in SEVERE INJURY or DEATH. Follow all instructions and warnings.**
- **Reduce speed on roads.**
- **Watch the safety video before riding.**
- **Reduce speed when riding with a passenger.**
- **Always wear ear protection.**
- **Always use an approved helmet and protective gear.**
- **Never carry more than one passenger on this 2-up vehicle.**
- **Never use with drugs or alcohol.**
- **Distribute weight and cargo evenly on the vehicle, refer to operator's guide.**

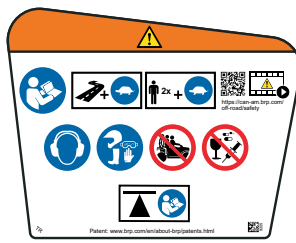

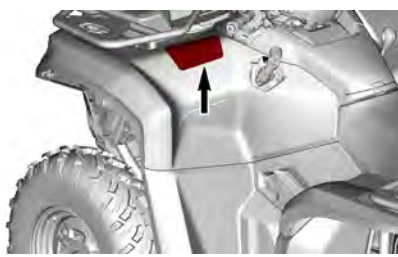

Passenger Warning Label

1-UP Models

⚠ WARNING

- **Locate and read operator's guide. Improper ATV use can result in SEVERE INJURY or DEATH. Follow all instructions and warnings.**
- **Never carry a passenger on this 1-up vehicle.**

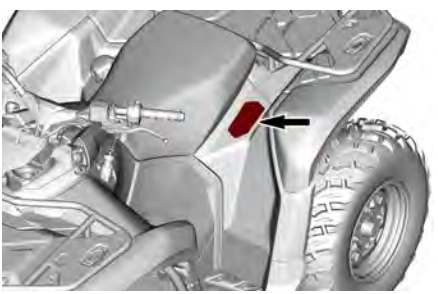

2-UP Models

⚠ WARNING

- **Locate and read operator's guide. Improper ATV use can result in SEVERE INJURY or DEATH. Follow all instructions and warnings.**
- **Passenger on 2-up models must always use an approved helmet and protective gear.**
- **Never carry more than one passenger on this 2-up vehicle.**
- **Passenger on 2-up models must NEVER ride after using drugs or alcohol.**

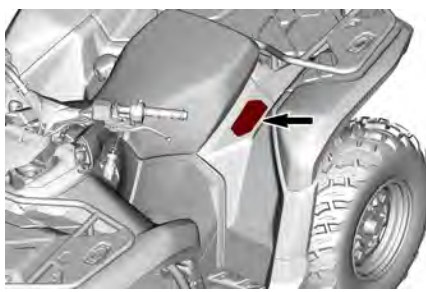

Recommended Age – Warning Label

⚠ WARNING

Operating this ATV if you are under the age of 16 increases the chance of SEVERE INJURY or DEATH to the operator, and to both the operator and passenger on 2-up models. NEVER operate this ATV if you are under age 16.

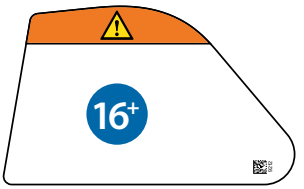

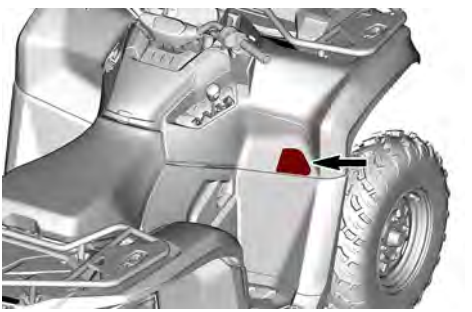

Tire Pressure and Maximum Load - Warning Label

1-UP Model

⚠ WARNING

- **Locate and read operator's guide.**
- **Reduce speed when carrying cargo or pulling a load.**
- **ALWAYS maintain proper tire pressure as shown. Improper tire pressure or overloading can cause loss of control, resulting in SEVERE INJURY or DEATH.**
- **NEVER exceed the load capacity of 234 kg (517 lb) including weight of operator, cargo, accessories, and trailer tongue weight.**
- **NEVER exceed 90 km/h (55 MPH) if total load is more than 163 kg (360 lb).**

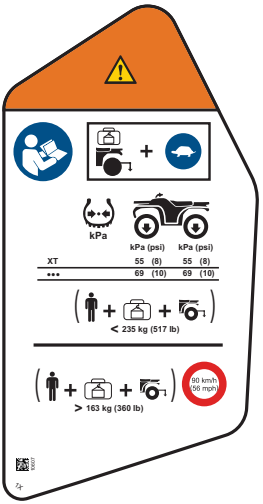
kPa
kPa (psi)
kPa (psi)
XT
55 (8)
55 (8)
•••
69 (10)
69 (10)
< 235 kg (517 lb)
> 163 kg (360 lb)
90 km/h
56 mph

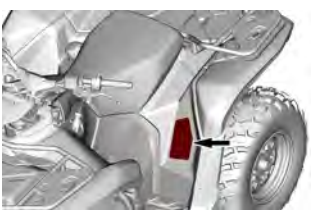

2-UP Model

⚠ WARNING

- **Locate and read operator's guide.**
- **Reduce speed when carrying cargo or pulling a load.**
- **ALWAYS maintain proper tire pressure as shown. Improper tire pressure or overloading can cause loss of control, resulting in SEVERE INJURY or DEATH.**
- **NEVER exceed the load capacity of 272 kg (600 lb) including weight of operator, cargo, accessories, and trailer tongue weight.**
- **NEVER exceed 90 km/h (55 MPH) when carrying a passenger.**
- **NEVER exceed 90 km/h (55 MPH) if total load is more than 163 kg (360 lb).**

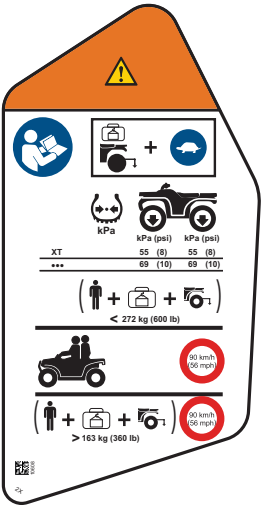
kPa
kPa (psi)
kPa (psi)
XT
55 (8)
55 (8)
•••
69 (10)
69 (10)
< 272 kg (600 lb)
90 km/h (56 mph)
> 163 kg (360 lb)
90 km/h (56 mph)

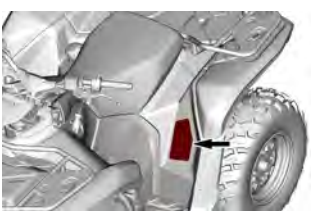

Maximum Racks Loading - Warning Label

Front Rack

⚠ WARNING

- **NEVER carry a passenger on racks.**
- **MAXIMUM FRONT LOAD: 54 kg (120 lb) evenly distributed.**
- **MAXIMUM REAR LOAD: 109 kg (240 lb) evenly distributed (including trailer tongue weight if applicable).**

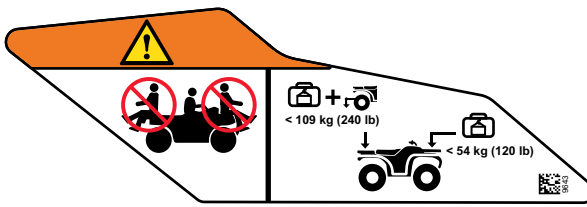

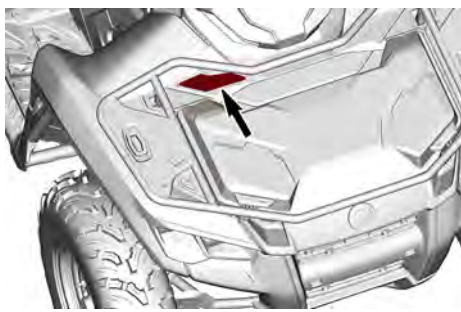

Rear Rack

⚠ WARNING

- **NEVER carry a passenger on racks.**
- **MAXIMUM FRONT LOAD: 54 kg (120 lb) evenly distributed.**
- **MAXIMUM REAR LOAD: 109 kg (240 lb) evenly distributed (including trailer tongue weight if applicable).**

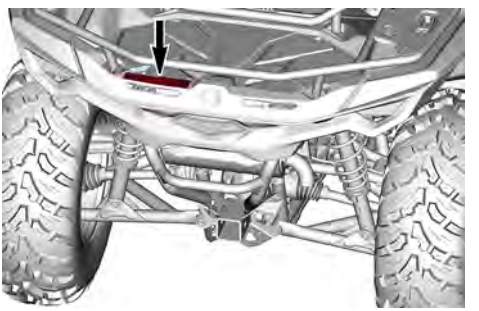

Front Storage Compartment Load - Warning Label

⚠ WARNING

- **Locate and read operator's guide.**
- **NEVER carry high objects that could affect visibility for the driver.**

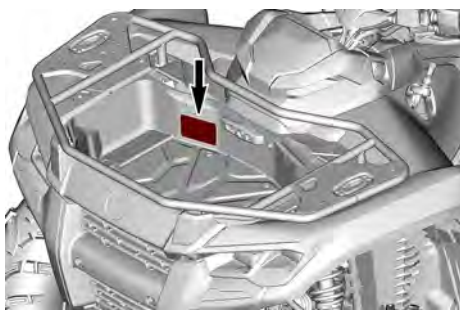

Front Load - Warning Label

⚠ WARNING

- **Locate and read operator's guide.**
- **MAXIMUM LOAD: 13 kg (30 lb) on the cover.**

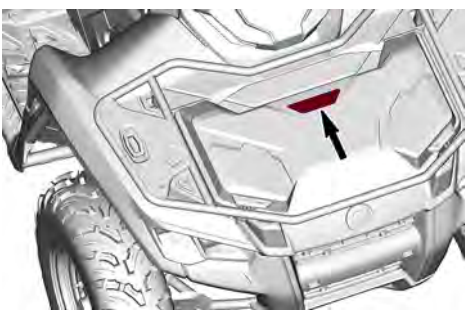

Shifting Procedure – Notice Label

NOTICE

This vehicle must be stopped before shifting lever. ALWAYS apply foot brake to shift from Park (P) and Neutral (N).

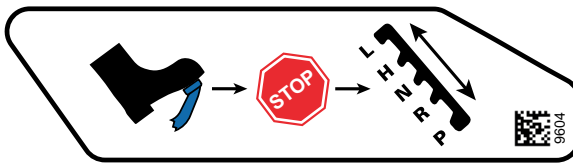

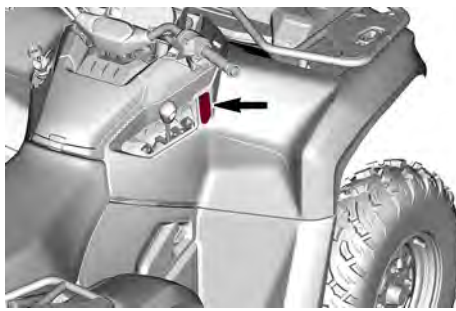

Pulling a Load and Hot Surface (Rear Bumper) — Warning Label

⚠ WARNING

NEVER attach to the bumper or on the luggage rack to pull a load This can cause the vehicle to tip over.
ALWAYS use the trailer hitch or the recovery hook to pull a load.

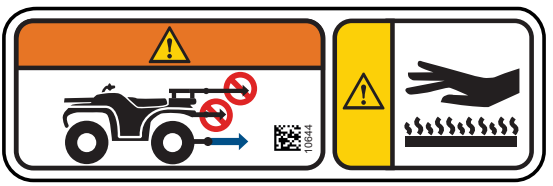

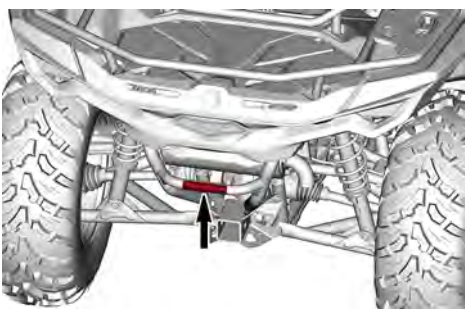

Winch Operation — Warning Label

⚠ WARNING

- **Locate and read user's guide.**
- **Always use the hook strap to manipulate the hook.**
- **Never put fingers in the hook or hand between hook and fairlead.**
- **Never use the winch as a lifting device or a hoist.**

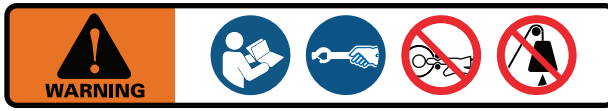

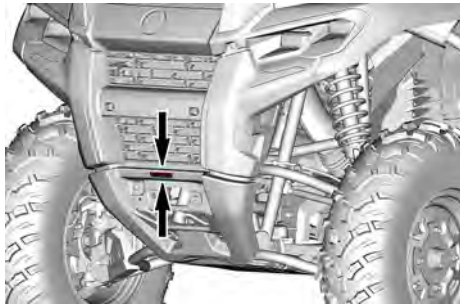

Coolant Hot - Warning Label

⚠ WARNING

Do not open when HOT.

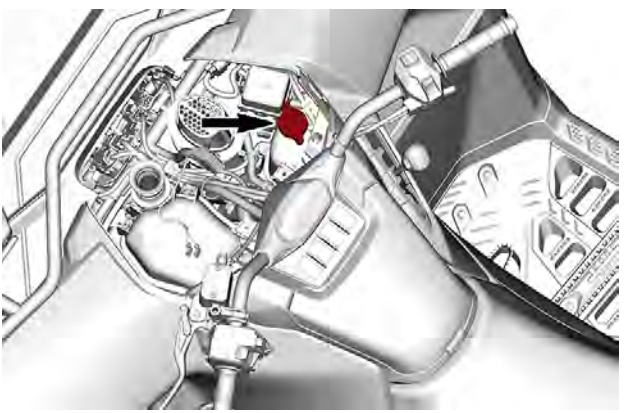

Possible Burn - Warning Pictogram

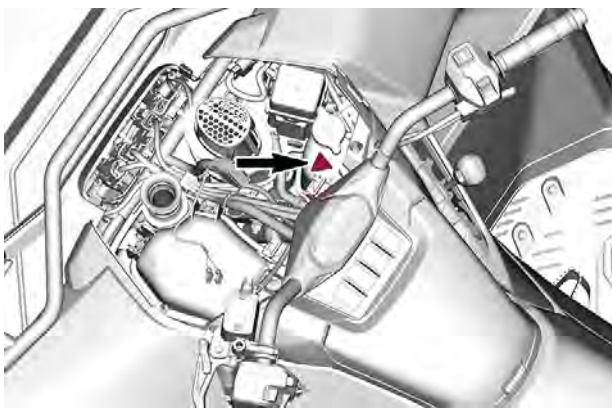

This page is intentionally blank

VEHICLE INFORMATION

Models with Electronic Throttle Control (ETC)

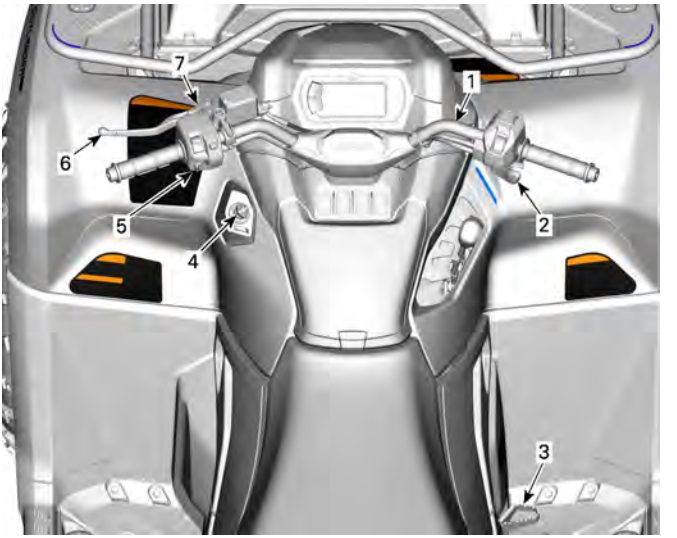

1. *Handlebar*
2. *Throttle lever*
3. *Brake pedal*
4. *RF D.E.S.S. post or ignition switch*
5. *Engine stop switch*
6. *Brake lever*
7. *Brake lock lever*

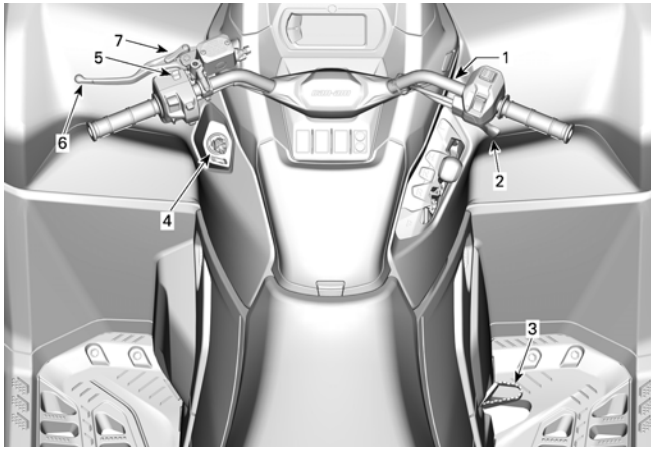

1. *Handlebar*
2. *Throttle lever*
3. *Brake pedal*
4. *RF D.E.S.S. post or ignition switch*
5. *Engine stop switch*
6. *Brake lever*
7. *Brake lock lever*

While reading this Operator's Guide, remember that:

⚠ WARNING
Indicates a potential hazard which, if not avoided, could result in serious injury or death.

HANDLEBAR

The handlebar controls the steering of the vehicle.

As the handlebar is rotated to right or left, the front wheels are turned in this direction to steer the vehicle.

⚠ WARNING

Fast reverse while turning, could result in loss of stability and control.

THROTTLE LEVER

The throttle lever is located on the RH side of the handlebar.

The throttle lever controls the engine speed.

To increase or maintain vehicle speed, press the throttle lever with your right thumb.

To decrease vehicle speed, release the throttle lever.

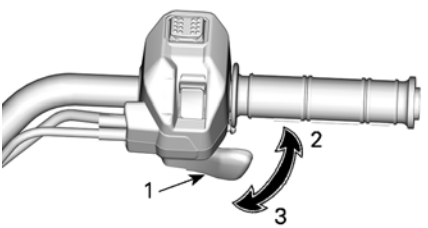

TYPICAL

1. *Throttle lever*
2. *To accelerate*
3. *To decelerate*

BRAKE LEVER

The brake lever is located on the LH side of the handlebar.

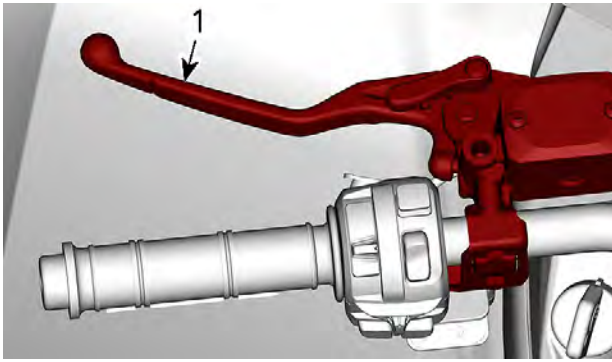

1. Brake lever

The brake lever function is to slow down or stop the vehicle.

When the brake lever is compressed, the front and rear brakes are applied.

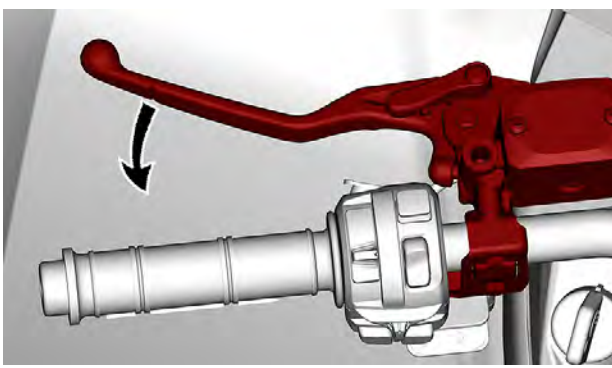

Braking effect is proportional to the force applied on the lever.

BRAKE LOCK LEVER

The brake lock lever is located on the LH side of the handlebar.

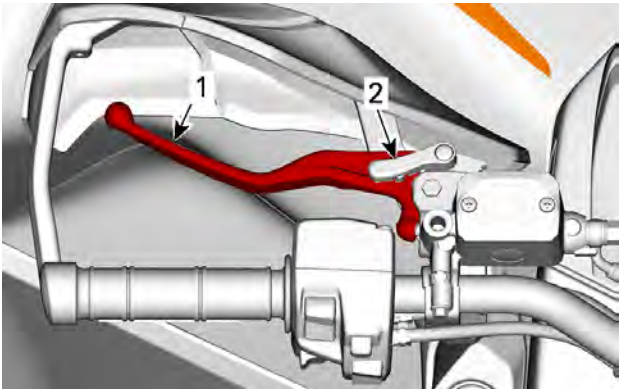

1. *Brake lever*
2. *Brake lock lever*

Engage the brake lock whenever the vehicle is parked.

Models without ABS: The brake lock lever maintains the brakes apply **on the front and rear wheels** to prevent the vehicle from moving.

Models with ABS: The brake lock lever maintains the brakes apply **on front wheels** to prevent the vehicle from moving.

⚠ WARNING

Always apply the parking brake when the vehicle is not in operation by engaging the brake lock lever and moving the shifter on the PARK position.

1. Squeeze the brake lever.
2. Move the brake lock lever forward to engage the brake lock.

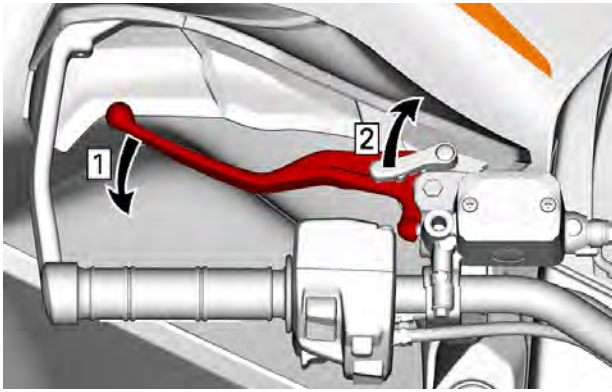

1. *Apply brakes*
2. *Lock brakes*

NOTE:
The brake lock lever can be set to several positions.

NOTICE

When the brake lock lever is applied , make sure the vehicle stays securely in place.

3. To unlock the brake lock lever, simply squeeze the brake lever. It should return to the rest position.

⚠ WARNING

Make sure brake lock lever is released before operating the vehicle.
If brake lock lever is left engaged while riding, it may cause damage to the brake system and cause loss of braking capacity and/or fire.

BRAKE PEDAL

The brake pedal is located on the RH side footrest.

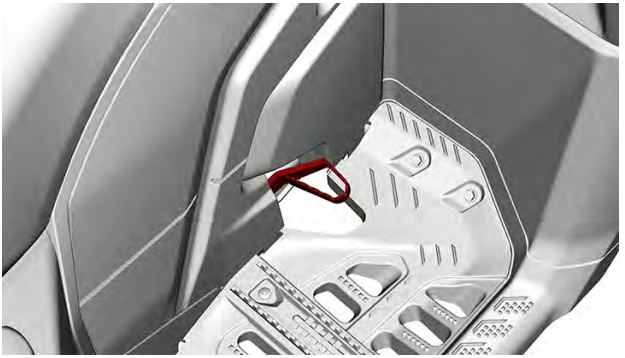

When the brake pedal is pressed down, the rear brake is applied.

On models equipped with ABS, the front brakes are also applied.

When released, the brake pedal should return to its original position.

Braking effect is proportional to the force applied on the pedal.

NOTE:
The brake will have also an effect on front wheels through the drive train when 4WD is engaged.

Should the brake lever system fail, the rear brake can be used by depressing the brake pedal.

ENGINE STOP SWITCH

This switch can be used to stop the engine and as an emergency control.

To stop engine, fully release throttle lever then set the engine stop switch to the STOP position.

Even if the engine can be stopped either by either turning the ignition key to OFF position or by removing the D.E.S.S. key, BRP recommends the engine be stopped by setting the engine stop switch to the STOP position.

Models with D.E.S.S. Key

The engine stop switch is located at the top of the multifunction switch.

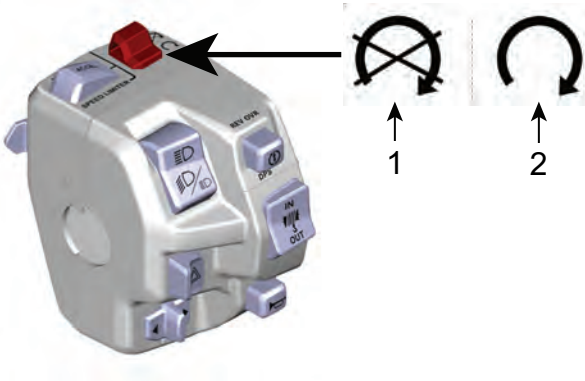

1. STOP position
2. RUN position

RF D.E.S.S. KEY AND POST

D.E.S.S. Key

These keys contain an electronic circuit that gives it a unique electronic serial number.

The D.E.S.S. system reads the key code and allows engine starting for keys it recognizes.

The vehicle is delivered with 1 key. This key can be programmed as,

– Normal
– Performance, or
– Work

NOTE:
Additional keys are available from your dealer as an accessory.

Refer to your authorized Can-Am Off-road dealer for complete information.

⚠ WARNING

Rollovers, tipovers, collisions and loss of control resulting in serious injury or death are possible with the performance or normal key. Using the normal key is not a substitute for the operator being prepared, qualified, and operating with care.

Normal Key

The normal key limits the vehicle rate of acceleration and/or the vehicle speed to 70 km/h (43 MPH).

⚠ WARNING

On steep downhills, the engine speed limiter may not prevent the vehicle from accelerating beyond this speed.

This key may be useful for riders who prefer more gradual acceleration, or for riding in environments where full speed and high acceleration are not desirable.

For example, in narrow, winding trails, operators may prefer a normal key.

Performance Key

The performance key allows the user to access the full torque of the engine as well as the top speed of the vehicle.

This may be useful for riders who prefer crisper throttle response, and for environments where higher speeds and greater acceleration are appropriate.

For example, in wide-open straight trails, operators may prefer the performance key.

Work Key

The work key does not have engine torque limitation but has a programmable vehicle speed.

The speed limitation must be determined during the key creation by the dealer. Only the dealer can modify the programmed speed.

D.E.S.S. Flexibility

The D.E.S.S. of your vehicle can be programmed by your authorized Can-Am Off-road dealer to accept up to 8 different keys.

If you have more than one D.E.S.S. equipped Can-Am vehicle, each can be programmed by your authorized Can-Am Off-road dealer to accept the other vehicle D.E.S.S. keys.

SECONDARY CONTROLS

1. *Throttle lever control housing*
2. *Shift lever*
3. *Multifunction switch*
4. *Indicator LEDs*

While reading this Operator's Guide, remember that:

⚠ WARNING
Indicates a potential hazard which, if not avoided, could result in serious injury or death.

THROTTLE LEVER CONTROL HOUSING

Electronic Throttle Control (ETC)

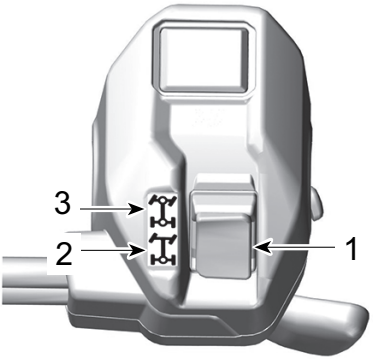

MODELS WITHOUT 4WDLOCK MODE

1. *2WD/4WD selector*
2. *2WD position*
3. *4WD position*

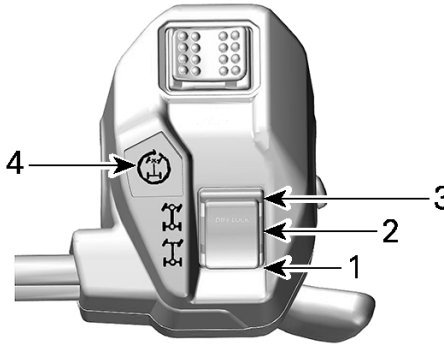

MODELS WITH 4WDLOCK MODE

1. *2WD position*
2. *4WD position*
3. *4WDLock position*
4. *4WDLock telltale*

Changing Traction Mode

Before passing in 2WD or in 4WD modes:

1. Stop the vehicle completely.
2. Let the engine idling.
3. Select desired mode.

NOTICE

Front differential damage may occur if the 2WD/4WD selector is used while vehicle is moving.

Models with 4WDLock Mode

To engage or disengage the 4WDLock mode:

1. Make sure 4WD mode is selected.
2. Reduce your speed under 30 km/h (20 MPH).
3. Release the throttle.
4. Momentary fully press the selector up.
5. To disengage the 4WDLock mode, press the selector up again.

When the 4WDLock is activated, the telltale on the throttle lever control housing and the icon in the digital display will turn on and a beep sound will be heard.

NOTE:
If the telltale flashes then stays off, the request is not acknowledged. Reduce your speed under 30 km/h (20 MPH), release the throttle and try again.

2WD Mode

In this mode, the engine power is transferred through the rear wheels only.

To engage the 2WD mode, press the selector **DOWN**.

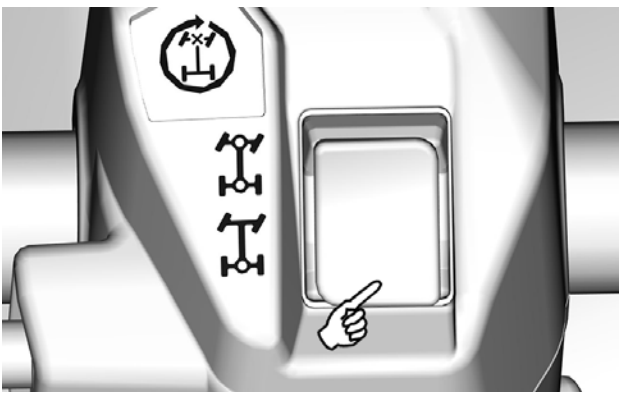

TYPICAL

4WD Mode

The engine power is distributed by both the front and the rear wheels.

To engage the 4WD mode, move the selector **in center**.

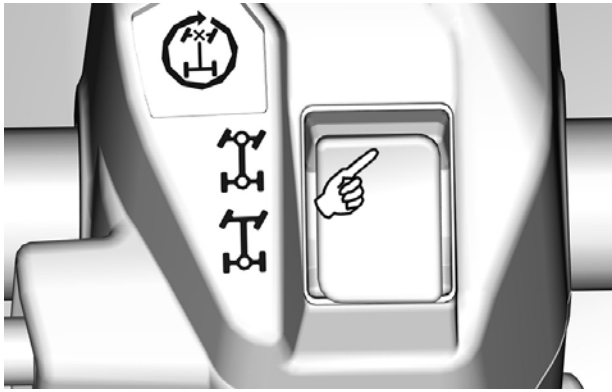

TYPICAL

4WDLock Mode

⚠ WARNING

Changing the direction abruptly can cause loss of control or injury.
Never apply the 4WDLock mode before entering a turn or during the turn.
The vehicle behavior is modified when the 4WDLock mode is activated.
The turning radius is also increased.

This mode is designed to lock the front differential allowing more traction to free the vehicle from a situation (ex: vehicle caught in mud or other soft terrains).

The engine power is then distributed equally at all 4 wheels.

In 4WDlock mode, a speed limiter restricts the vehicle speed to 40 km/h (25 MPH). Refer to *Multifunction Switch* to have more information about how overriding this limitation.

On models equipped with ABS, the speed is limited to 30 km/h (19 MPH).

Engine Modes Selector

This option is offered on few models only.

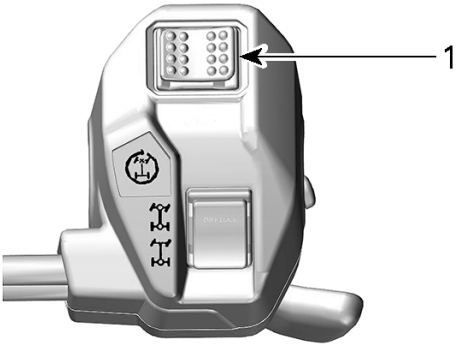

1. Engine modes selector

The engine modes selector is located on the top of the throttle lever control housing.

2 specific modes, other than NORMAL mode, can be selected:

– WORK
– SPORT

Also, when the SPORT mode is activated a beep sound will be heard.

WORK Mode

The WORK mode provides a smoother throttle response and is limited to a maximum speed of 70 km/h (43 MPH).

To activate the WORK mode, toggle the selector towards the LEFT.

Toggle to the RIGHT to deactivate.

SPORT Mode

The SPORT mode provides a crisper throttle response.

This mode can be activated with all key types and provides the maximum power with the used key.

To activate the SPORT mode, toggle the selector towards the RIGHT.

Toggle to the LEFT to deactivate.

Intelligent Engine Braking (iEB) Mode Selector (if equipped)

The Intelligent Engine Braking (iEB) allows to user to adjust the level of the engine braking before or while riding.

⚠ WARNING

The level of engine braking will have an effect on the deceleration rate when the throttle lever is released.
It's not recommended to change the iEB setting while performing some actions.
These actions include but not limited to the following: braking, turning or when descending.
Be ready to use the brake to reduce the speed when needed.

The iEB selector is located on the back of the throttle lever housing.

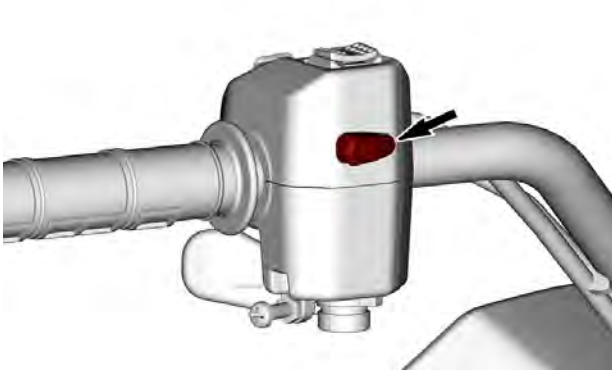

Three (3) specific levels are available and the selected mode is indicated in the Mode Display of the gauge.

Mode	Description	Display message
Mode 1	Maximum engine braking	IEB MAX

Mode 2	Medium engine braking	IEB MED
Mode 3	Very low engine braking	IEB MIN

Use the selector to change the iEB level or showing the selected level in the gauge.

– **Short press (less than 0.5 second)**: Display the current iEB level in the gauge.
– **Long press (more than 1 second)**: Change to the next level.

The level change is sequenced from MAX to MIN at each long press, and returns to MAX after MIN.

After a level change, the message into the gauge shows the new selected level.

When the MAX level is selected and the throttle lever is released, the engine braking alone is slowing down the vehicle significantly, allowing less usage of the brake lever.

With the MIN level, more brake lever input is required to slow down or stop the vehicle.

The last selected level is automatically activated when the vehicle is restarted after a complete shut down.

SHIFT LEVER

The shift lever is located on the RH side of the vehicle near steering column.

The shift lever is used to change the gearbox position.

The shift lever has 5 positions:

Shift Lever Positions	
Position	Gear
P	Park
R	Reverse
N	Neutral
H	High range (forward)
L	Low range (forward)

The vehicle must be stopped and brakes applied prior to selecting any gear.

NOTICE

This gearbox is not designed to shift while vehicle is moving.

Park

The park position locks the gearbox to help prevent vehicle movement.

⚠ WARNING

Always use the PARK (P) position when the vehicle is not in operation. The vehicle can roll if the shift lever is not set to P (PARK).

Reverse

The reverse position allows the vehicle to go backwards.

NOTE:
In reverse operation, the engine's RPM is limited, thus limiting the vehicle reverse speed.

⚠ WARNING

When driving downhill, gravity can increase the vehicle speed above the set limited speed.

Neutral

The neutral position disengages the gearbox.

⚠ WARNING

Always use the PARK (P) position when the vehicle is not in operation. The vehicle can roll if the shift lever is set to N (NEUTRAL).

High Range (Forward)

This position selects the high speed range of the gearbox. It is the normal driving speed range. It allows the vehicle to reach its maximum speed.

Low Range (Forward)

This position selects the low speed range of the gearbox. It allows the vehicle to move slowly with maximum torque at the wheels.

NOTICE

Use the low speed range to pull a trailer, carry heavy cargo, go over obstacles, riding in mud or drive uphill and downhill.

MULTIFUNCTION SWITCH

For Models with Electronic Throttle Control (ETC)

Headlight Switch

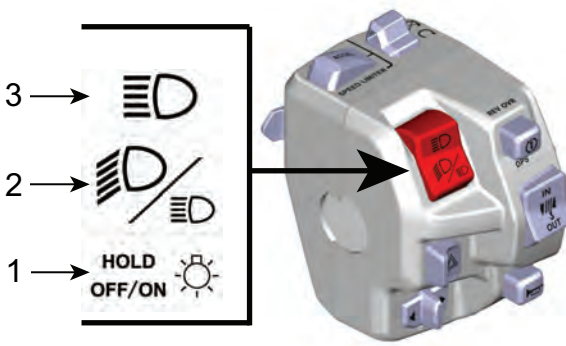

1. *Dimmer/Light OFF*
2. *Low beam*
3. *High beam*

High beam: Move the switch upwards to select the high beam.

Low beam: Position the switch in the center to select the low beam.

Dimmer / OFF:

– Momentarily short press: To momentary switch high headlights ON.
– Long press: To turn headlights OFF.

Start/DPS/Override Button

This button has 3 functions.

– Start the engine
– Activate the override function
– Change DPS mode.

Engine Start Button

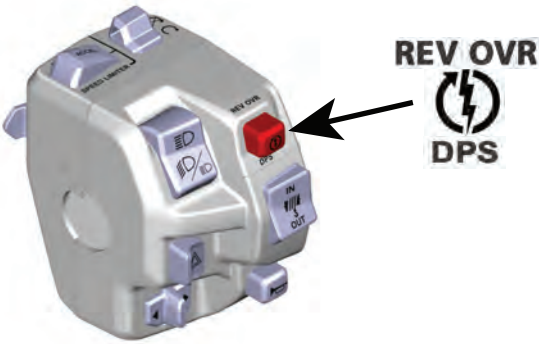

Press and hold the button to start the engine.

Release the button as soon as the engine has started.

Refer to *Starting the Engine* in the *Basic Procedures* section.

Override Function

This function allows to bypass the engine speed limiter when the vehicle is used in reverse or in the 4WDLock mode.

Except on models equipped with ABS, in 4WDLock, the override mode will allow to reach an other speed limitation:

– 60 km/h (37 MPH) in HIGH or LOW gear

– 25 km/h (16 MPH) in reverse.

⚠ WARNING

Make sure the area around the vehicle is clear before using the override mode.
The override mode must be used only at low speed and when the vehicle is caught in mud or other soft terrain.
Do not use the override mode when driving normally in reverse, this would result in excessive speed,
Do not use the override mode when driving normally in 4WDLock, otherwise a loss of control could occur.

To engage the override function, proceed as follows:

1. Ensure that the vehicle is completely stopped.
2. Press and hold the override/DPS button then press the throttle lever gradually.
3. When using the override function, the gauge will scroll an OVERRIDE message to confirm that the function is activated.
4. To disengage the override function, simply release the override/DPS button.

DPS Function

This button is also used to change the Dynamic Power Steering (DPS) mode.

For complete information on DPS modes, refer to *Tune Your Ride*.

Winch Control Switch (if equipped)

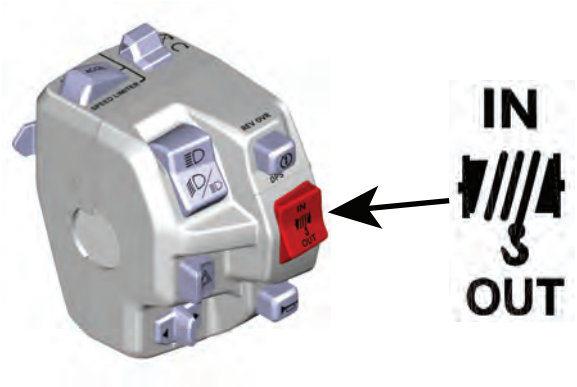

To let out the cable, press the switch down.

To reel in the cable, press the switch up.

Hazard Lights Button

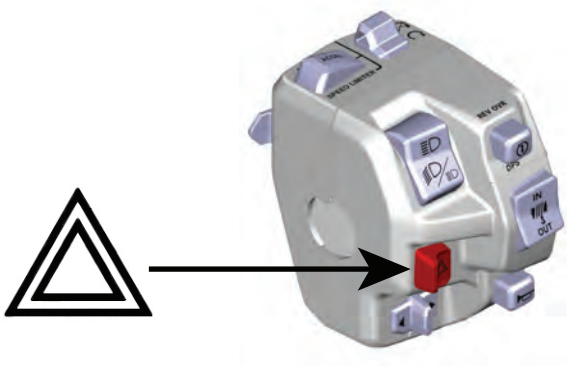

Push the button aside to activate the hazard lights. Push it on the other side to turn off.

The hazard lights system operates all the turn signals simultaneously. Used when the vehicle is stationary to indicate that the vehicle is temporarily obstructing traffic.

Hazard lights can be activated even when the vehicle electrical system is shut down.

Flasher Signal Switch

Move the switch to the left to activate LH turn signals and to the right to activate RH turn signals.

To stop the turn signals, move the switch back to the middle position.

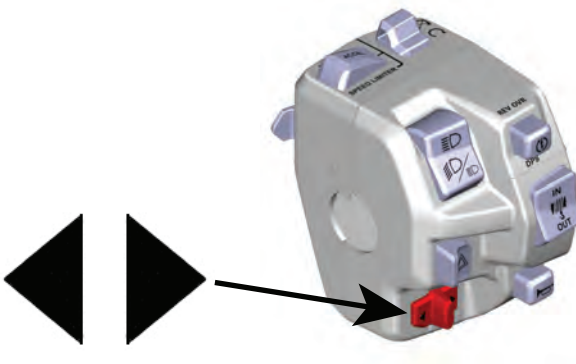

Horn Button

Push the button to use the horn. It will stop when the button is released.

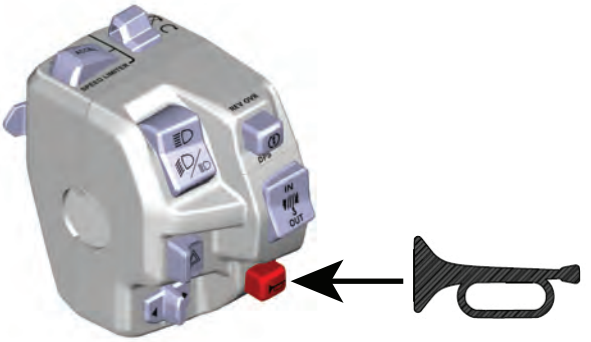

Speed Limiter Control (if equipped)

IMPORTANT: If your vehicle is equipped with ABS brakes but does not have controls on the left multifunction switch, the speed control is managed through the multifunction gauge. Refer to the 4.5" digital display section to find all information about speed limiter settings.

Speed limiter mode allows the operator to set a maximum speed that cannot be exceeded when riding.

This is useful to help the driver not to exceed certain limit, but it also helps to maintain a more constant speed when performing tasks with the ATV or when riding.

The operator can always vary the speed from ‘Stop’ position to the set speed using the throttle.

The operator must keep the throttle depressed to maintain its speed.

When the preset speed limit is reached, further movement of the throttle lever will have no effect, but speed can be reduced at any time by releasing the throttle lever.

⚠ WARNING

During riding at constant speed, keep your attention level up to maintain good situational awareness.
When riding downhill, vehicle’s speed may exceed the set speed.
To slow down, release the throttle and apply brake normally.

Activating and Adjusting Speed Limiter Mode

There is 2 ways to set the speed limitation to the desired value.

Before riding (engine on, idling standstill):

1. Operator can preset the desired speed limitation by doing a long press (hold 1 sec) on the SET(ON)/DECEL button.

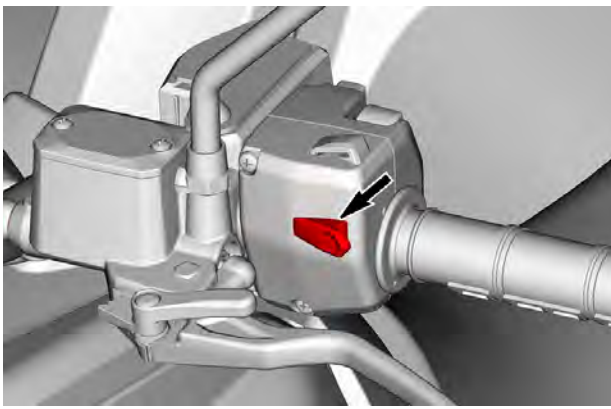

SET (ON)/DECEL BUTTON

2. When the vehicle is standstill, the speed limitation will automatically be set at the minimum vehicle speed for this function to work.
3. A ‘beep’ noise will confirm that the setting has been activated.
4. The operator can then increase the value by pressing the OFF/ACCEL button (short press).

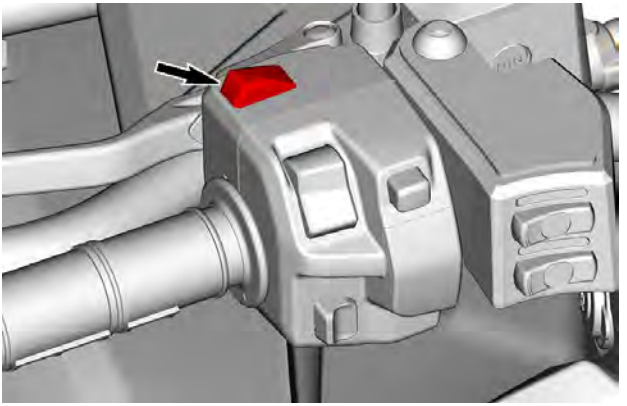

OFF/ACCEL BUTTON

5. Press the SET (ON)/DECEL button to reduce the speed limit value (short press).

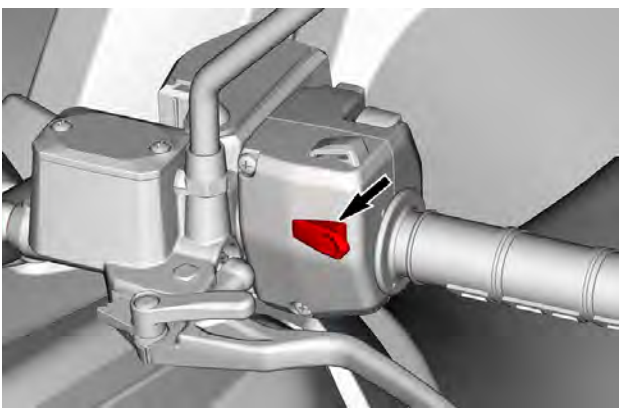

SET (ON)/DECEL BUTTON

When riding (at speed):

1. When the desired speed is reached, long press (1 sec) on SET (ON)/DECEL button.

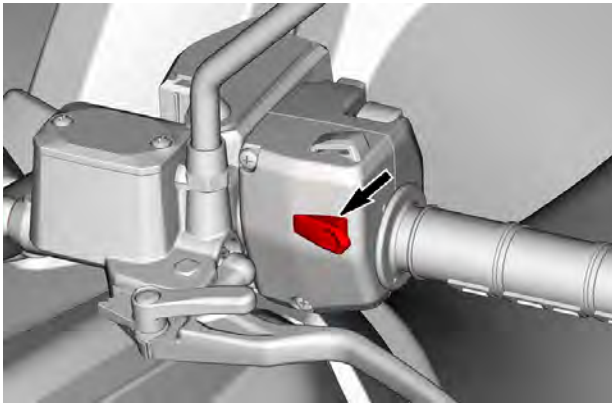

SET (ON)/DECEL BUTTON

2. A ‘beep’ noise will confirm that the setting has been activated and the speed limiter indicator will turn on into the digital display.

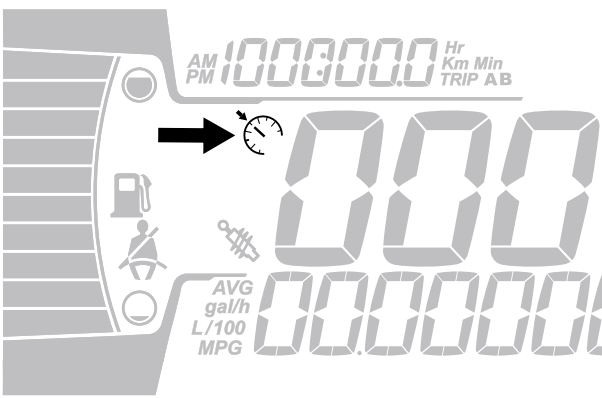

3. The operator can then increase the value by pressing the OFF/ACCEL button (short press).

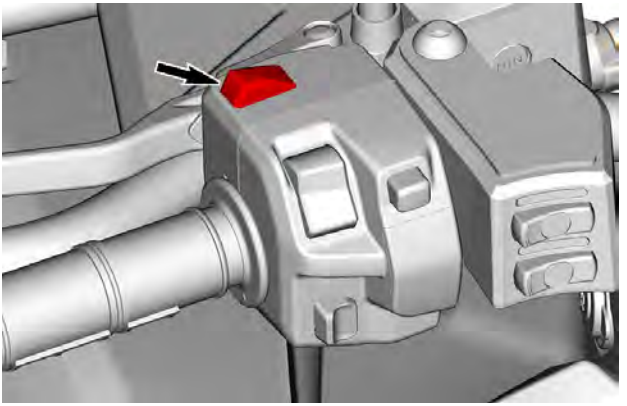

OFF/ACCEL BUTTON

4. Press SET (ON)/DECEL button to reduce the speed limit value (short press).

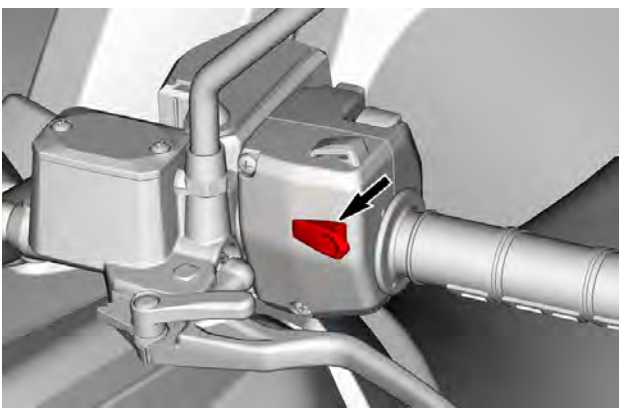

SET (ON)/DECEL BUTTON

When adjusting the speed limitation using OFF/ACCEL or SET (ON)/DECEL button, the speed will increase or decrease by step.

Speed	Increase or decrease by step of...
Minimum speed to 30 km/h (19 MPH)	1 km/h (1 MPH)
Over 30 km/h (19 MPH)	2 km/h (2 MPH)

Speed Limiter Values

The throttle must be held in to maintain speed.

The speed can be varied normally anywhere from a complete stop (idle) up to the limited set speed using the throttle and brake.

When a speed limitation is activated, the operator can further adjust the speed limit. Press the SET (ON)/DECEL button to reduce speed limit, or the OFF/ACCEL button to increase speed limit.

If the speed limiter is activated when the vehicle speed is under the minimal value, the predetermined minimal value will be set by default.

Metric Units		
Gear	Minimal Value	Maximal Value
L	8 km/h	70 km/h
H	11 km/h	100 km/h

Imperial Units		
Gear	Minimal Value	Maximal Value
L	5 MPH	44 MPH
H	7 MPH	62 MPH

Deactivating the Speed Limiter Mode

There are 2 options to deactivate the function:

– Press and hold the OFF/ACCEL button for 1 second.

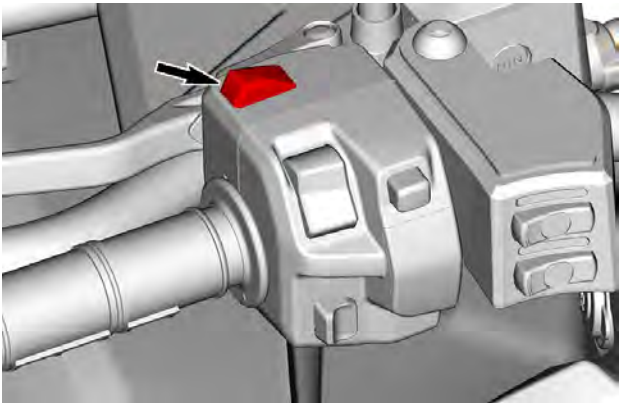

OFF/ACCEL BUTTON

– Press and hold the SET(ON)/DECEL button for 1 second.

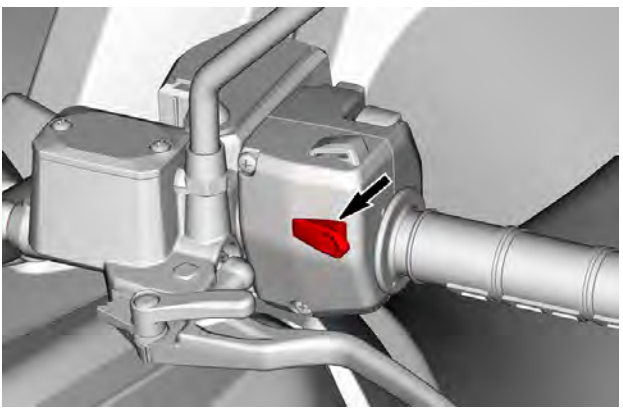

SET(ON)/DECEL BUTTON

HORN BUTTON

Vehicle Sold in Finland Only

The horn button is located on the console, above the glove box.

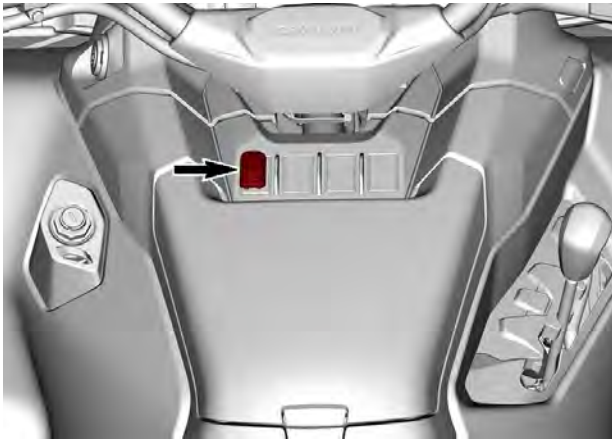

Press on the horn button to activate the horn.

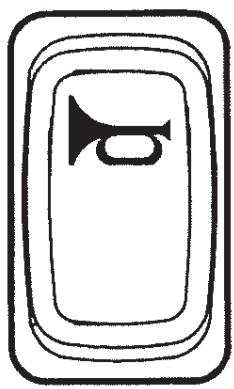

INDICATOR LEDS

Indicator LEDs	
	Trailer Flasher
	Position Lights

EQUIPMENT

While reading this Operator's Guide, remember that:

⚠ WARNING
Indicates a potential hazard which, if not avoided, could result in serious injury or death.

SEAT

Removing the Seat

1. Pull the seat latch upward. This latch is located underneath the rear of seat.

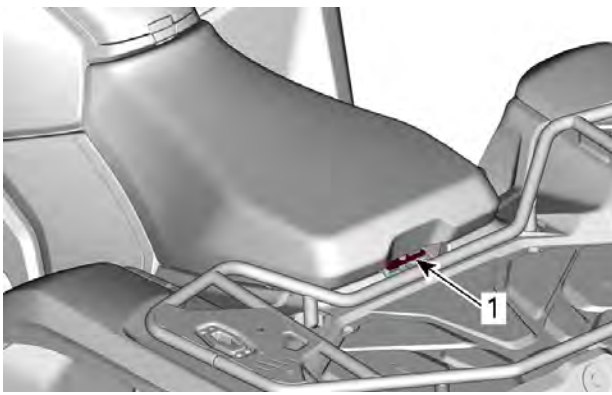

1–UP MODELS

1. Seat latch

2–UP MODELS

1. Seat latch

2. Pull seat upward then rearward.

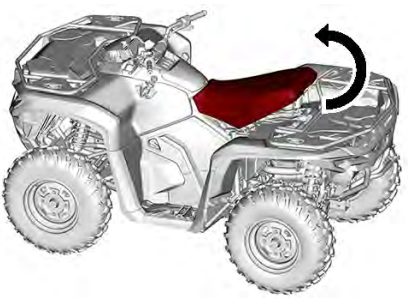

3. Continue lifting movement until you can release the front retaining device then completely remove seat.

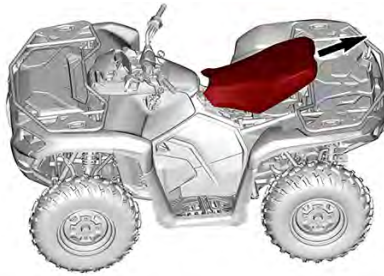

Installing the Seat

1. Insert front tabs of seat into hook of the relay starter support housing.

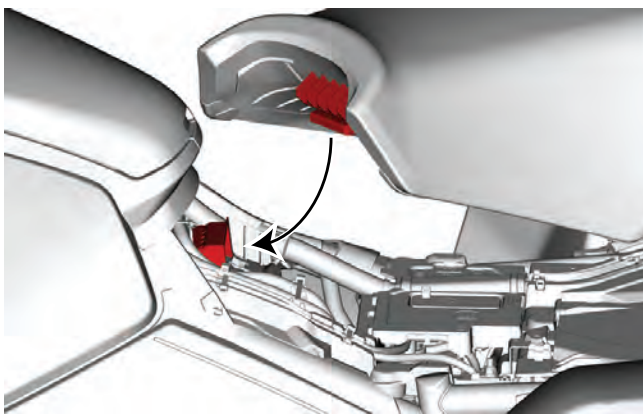

2. Push on the rear of seat to position it properly.

3. When seat rests in its position, firmly push seat down to latch. A distinctive snap will be felt.

4. Double check that the seat is secure by giving it a tug and pulling the front to confirm proper latching.

⚠ WARNING

Ensure the seat is properly locked in position by pulling the seat rearwards, then pulling the front and the rear up several times. Even if a distinctive snap is heard during the installation, always pull it back and up to confirm proper installation.

PASSENGER BACKREST

The backrest supports the back of the passenger during the ride.

⚠ WARNING

Without passenger backrest and passenger handles, the vehicle is a ONE RIDER vehicle (1-UP model) and NO PASSENGER must be allowed on vehicle.

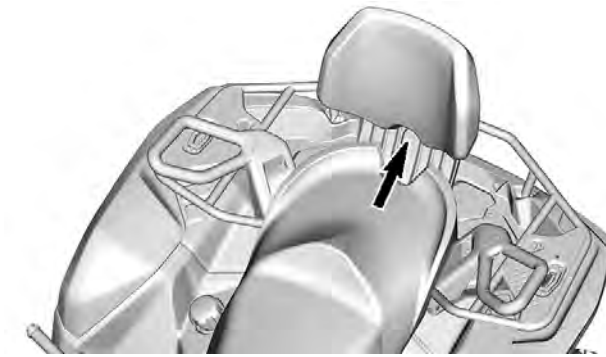

PASSENGER'S GRAB HANDLES

The grab handles are located on the RH and LH side of the passenger's seat.

They must be used by the passenger to hold on firmly during vehicle operation.

⚠ WARNING

The passenger must always hold on to the passenger grab handles, not the operator. He must also have both feet resting firmly against the footrests.

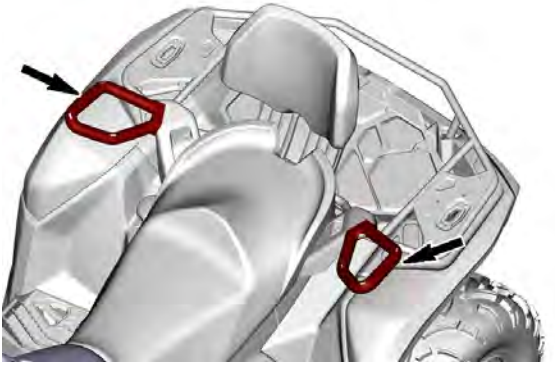

FOOTPEGS

The operator footpegs are located on the RH and LH side of the vehicle.

1-UP Models

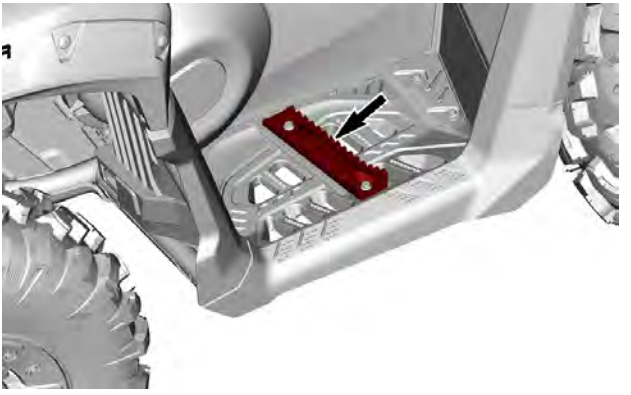

⚠ WARNING
Operator must have both feet on footpegs at all times during vehicle operation.

2-UP Models

The passenger footpegs are located on the RH and LH side of the vehicle behind the operator footpegs.

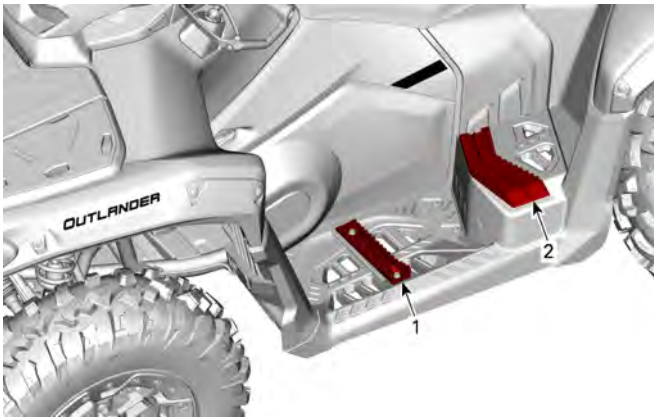

1. *Operator footpeg*
2. *Passenger footpeg*

⚠ WARNING
Passenger must have both feet on footpegs at all time during vehicle operation.

FRONT STORAGE COMPARTMENT

Convenient location to carry personal articles.

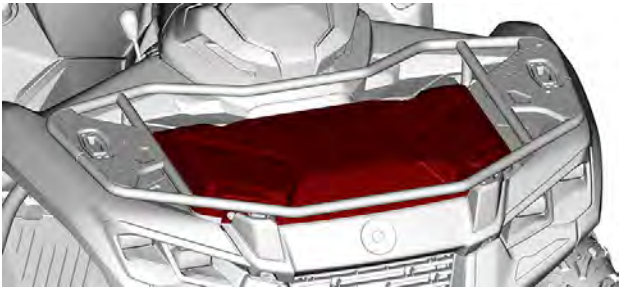

⚠ WARNING

Always place the shift lever into the PARK position before opening the cover.
Never leave any heavy or loose breakable objects in this storage area.
Always close and lock the cover before riding.

Opening the Front Storage Compartment

1. Unlock both cover latches and gently raise it.

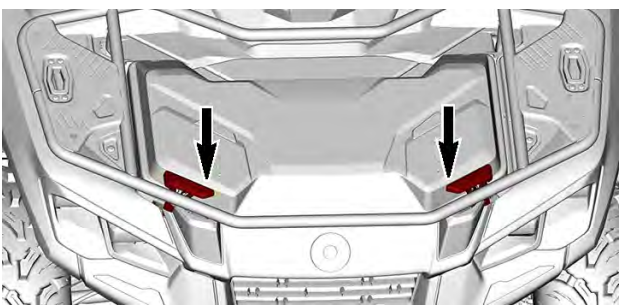

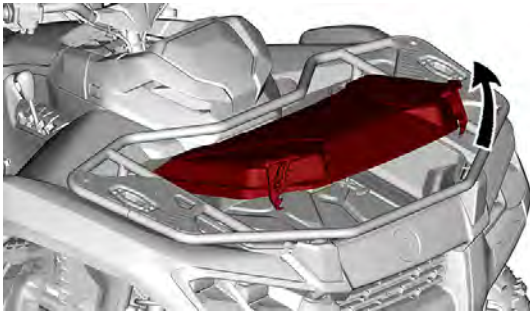

2. Rotate the lever located inside the storage compartment to lock the cover in the open position.

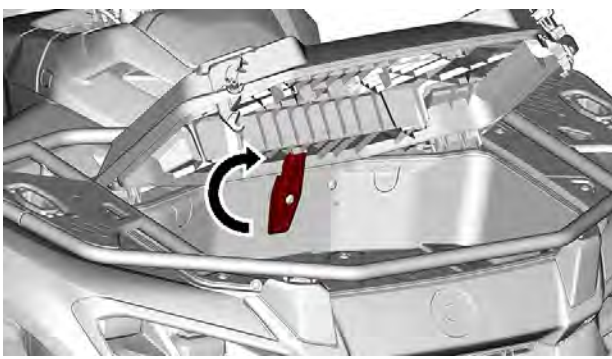

Removing the Front Storage Compartment Cover

1. Open the front storage compartment cover.
2. Remove the retaining cable from the cover.
3. Continue to open the cover then pull it upward.

Installing the Front Storage Compartment Cover

1. Reinsert the cover hinges in their locations.
2. Reinstall the retaining cable.
3. Close the cover properly.

Closing the Front Storage Compartment

1. Unlock the cover.

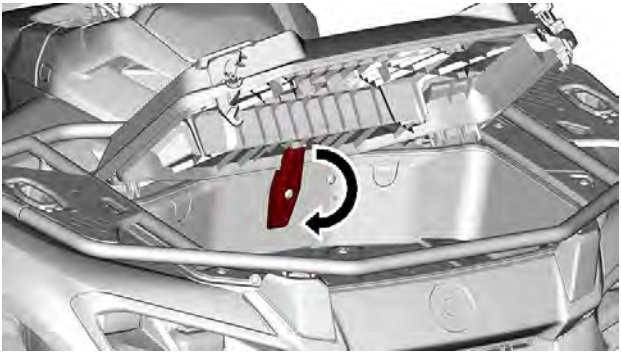

2. Gently lower and latch cover.

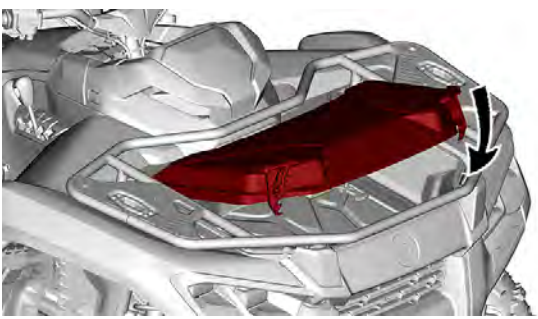

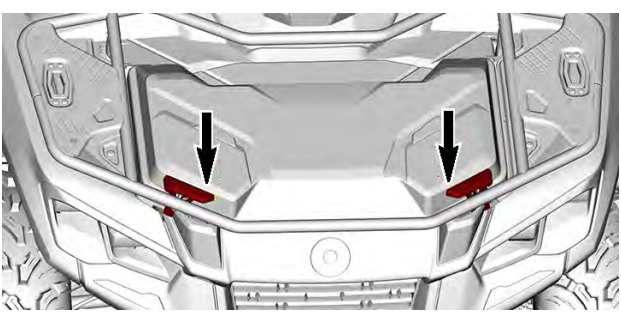

TOOL KIT

The tool kit is located in the front storage compartment, attached to the cover.

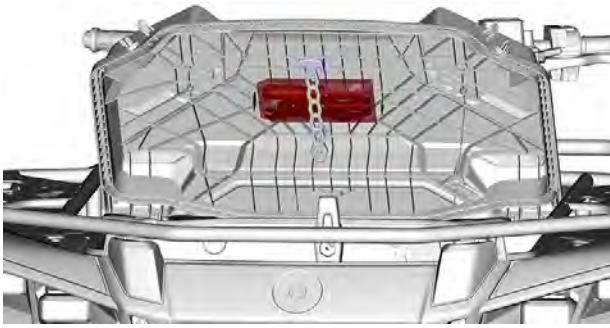

It contains tools for basic maintenance.

- Adjustable pliers
- Open end wrench (10 mm and 13 mm)
- Screwdriver - handle and double bits (flat and Phillips)
- Pressure gauge
- Suspension adjustment tool.

CONSOLE

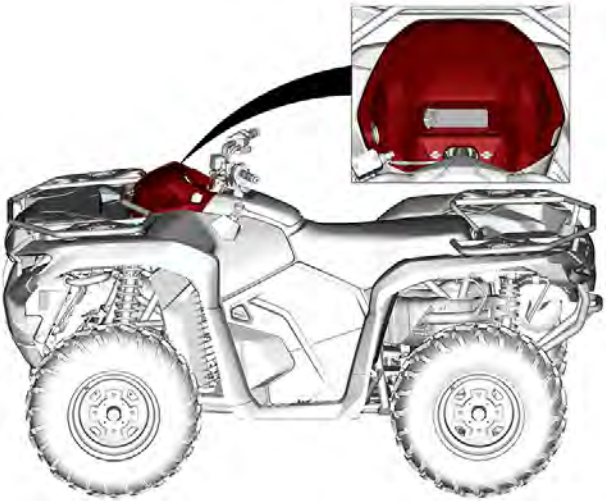

Removing the Console

1. Disengage both quarter turn screws.

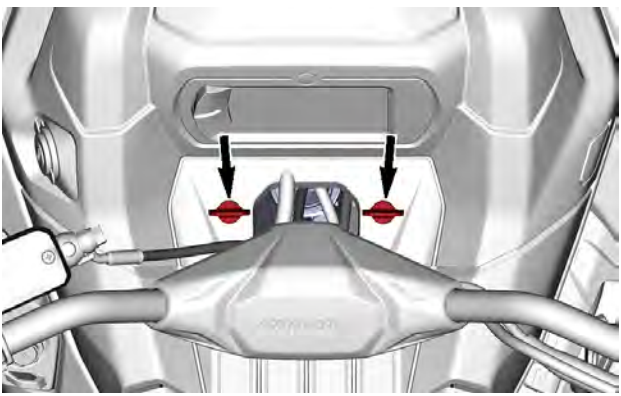

2. Press button on right side of console.

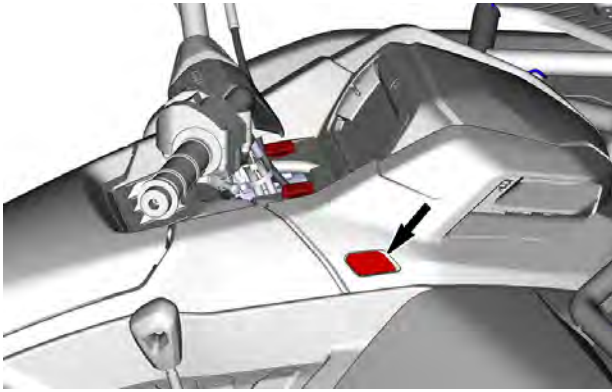

3. Unclip both locking tabs on sides of steering.

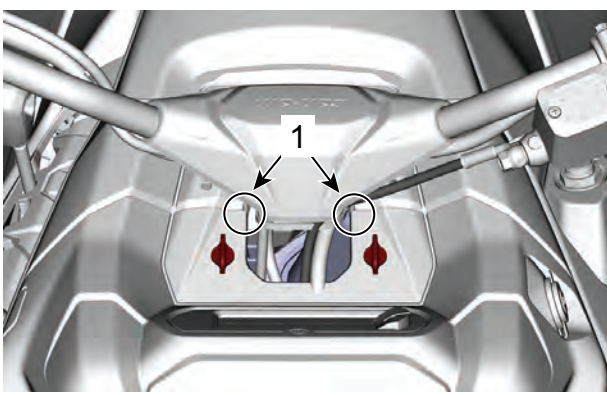

1. Locking tab location

4. Remove by pulling console upward then rearward.

Installing the Console

1. Insert front tabs of console first.
2. Push console down to clip both locking tabs on sides of steering.

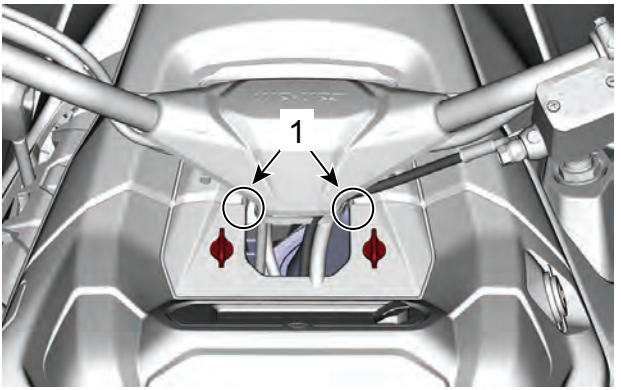

1. Locking tab location

3. Ensure button on right side is engaged in console.

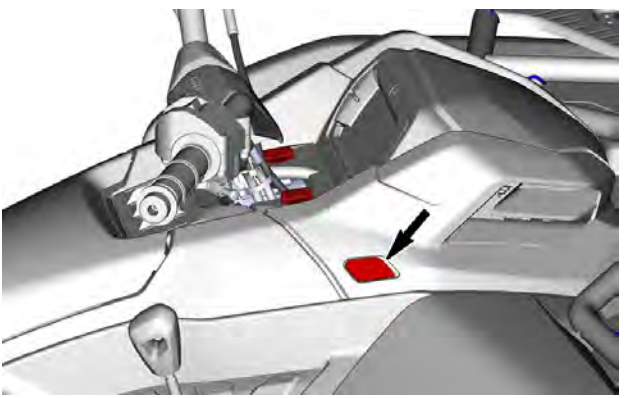

4. Secure console with two (2) quarter turn.

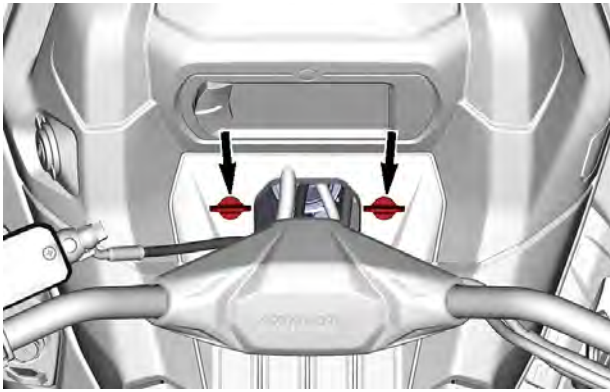

GLOVE BOX

A small storage compartment for personal articles and to store the operator's guide.

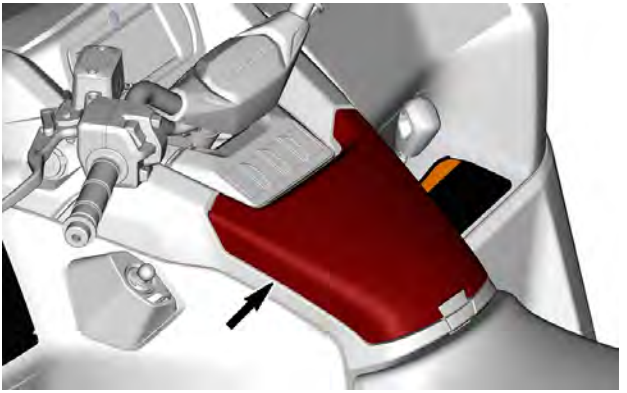

NOTICE

This storage compartment can become hot during summer and also when using the vehicle at slow speed for a long period of time.
Storing an electronic device like a cell phone is not recommended under these conditions because hot temperatures can cause permanent damage to the phone and its battery.

1. Pull on the cover latch to open the glove box.

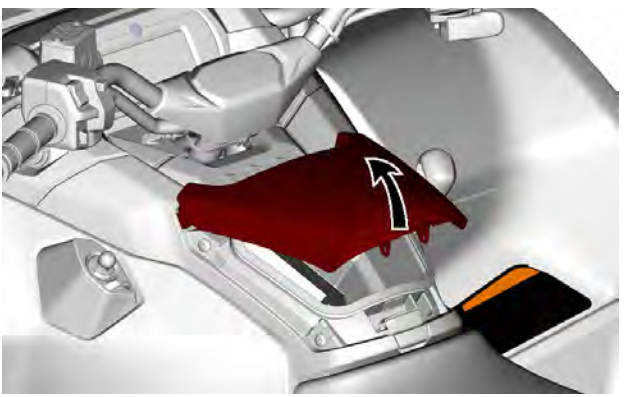

SIDE PANEL

Removing the Side Panel

1. Unlock the side panel latch.
2. Unclip the top locking tab.

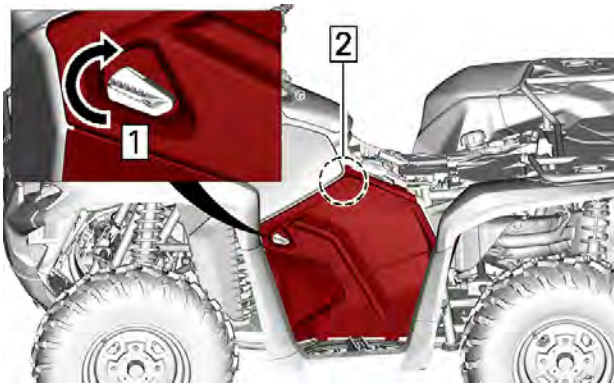

1. *Turn latch*
2. *Pull upper part of panel*
3. Incline side panel toward exterior of vehicle and pull upward.

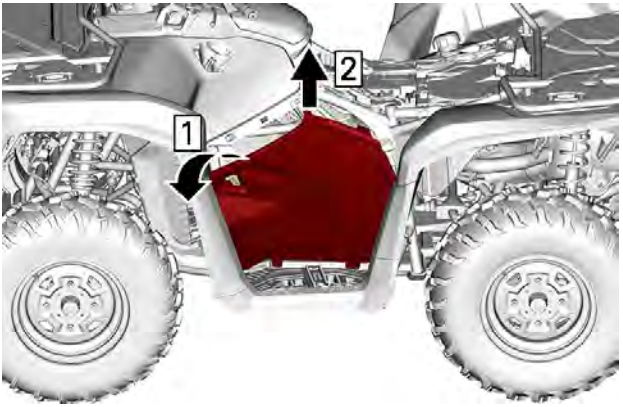

1. *Incline side panel*
2. *Pull upward*

Installing the Side Panel

1. Insert lower tabs of side panel and position on vehicle.

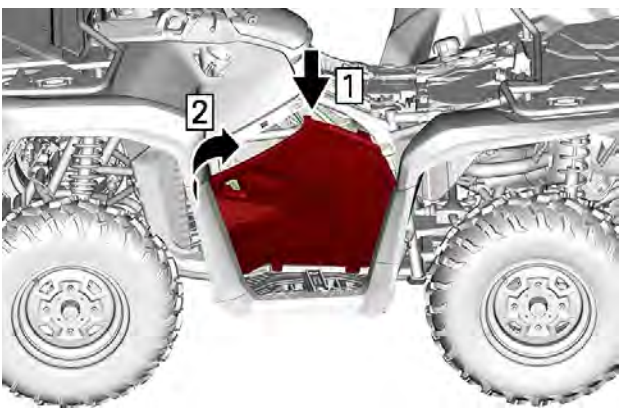

1. *Insert side panel tabs*
2. *Position side panel on vehicle*
2. Clip the upper locking tab.
3. Lock the side panel latch.

1. *Push upper part of panel*
2. *Turn latch*

12–VOLT POWER OUTLET

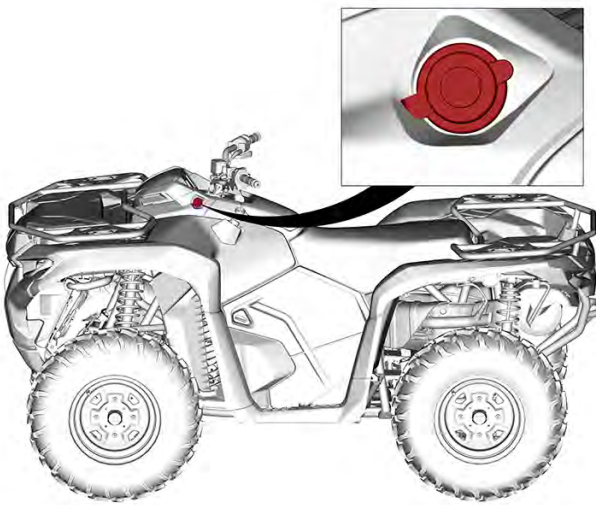

Convenient for handheld spotlight or other portable equipment.

Remove the protective cap to use.

Always install the protective cap after the use to protect the outlet against weather intrusion.

CARGO RACKS

⚠ WARNING

- **Never carry a passenger on a cargo rack.**
- **Cargo must never interfere with the drivers line of sight or affect his ability to properly steer the vehicle.**
- **Do not overload the vehicle.**
- **Always ensure all cargo is properly secured and does not extend out pass the racks.**

Always refer to the *Maximum Racks Loading - Warning Label* for cargo weight recommendations.

Cargo racks are convenient for carrying equipment and various other cargo. They must never be used to carry a passenger.

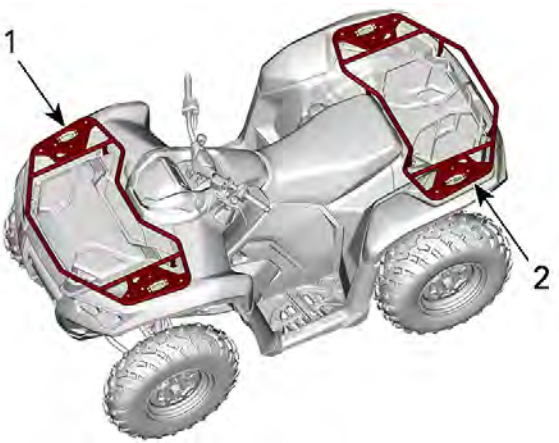

1. *Front cargo rack*
2. *Rear cargo rack*

WINCH (If Equipped)

⚠ WARNING

To avoid severe injury or death or important components damages.

- **Never use the winch cable/rope to retain a vehicle during trailering.**
- **Never ride with the winch cable/rope attached to a load or another vehicle.**
- **Only use the winch to help a stuck vehicle (snow, mud, etc.).**
- **Always refer to the winch manufacturer's instruction before pulling loads.**

The winch can be actuated using the winch control switch, located on the left multifunction switch, or with a remote control (sold separately).

A fairlead is used to prevent damages to the vehicle and guide the winch cable/rope into the winch.

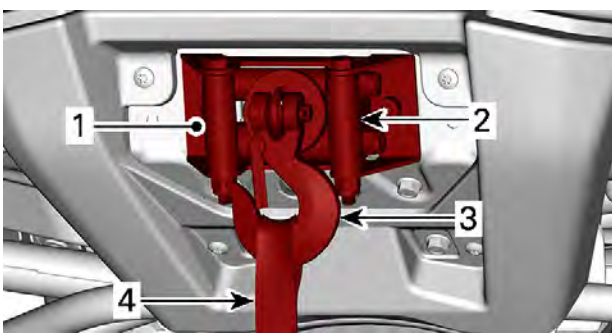

1. *Winch*
2. *Fairlead*
3. *Winch hook*
4. *Hook strap*

The following tips will help to reduce the risk of discharging the battery:

Unwind manually: Unlock the winch using the handle then pull on the hook strap to unreel.

It is recommended to let the engine run while winching or rewinding. Do not stop the engine immediately after winching to let battery recharge.

Also, when winching for more than 30 seconds, it is recommended to increase engine RPM in the range of 3000 RPM to increase charging power to the battery.

Refer to the winch manufacturer's instruction, supplied with the vehicle, for more information about the winch.

RECOVERY HOOKS

Convenient hooks to use to retrieve vehicle when stuck.

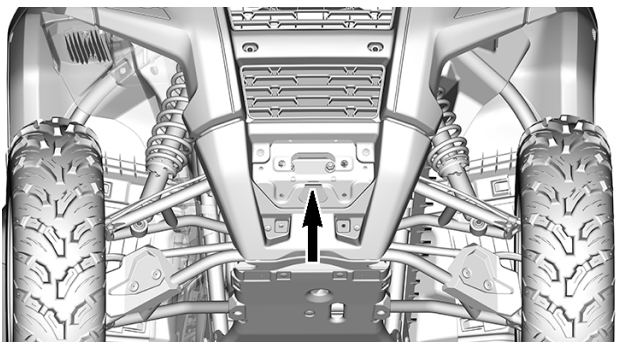

FRONT RECOVERY HOOK LOCATION

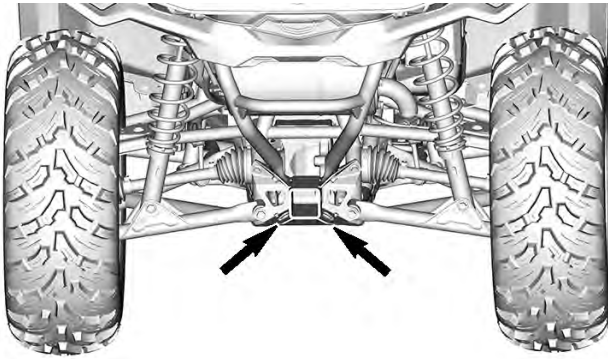

REAR RECOVERY HOOK LOCATIONS

TRAILER HITCH

Convenient trailer hitch to tow a trailer or other equipment.

Install the proper ball size as per trailer manufacturer recommendations.

⚠ WARNING
Ensure to install the proper ball size that matches the equipment you will tow.

Refer to the *Towing and Tongue Weight - Warning Label* for carrying loads and towing recommendations.

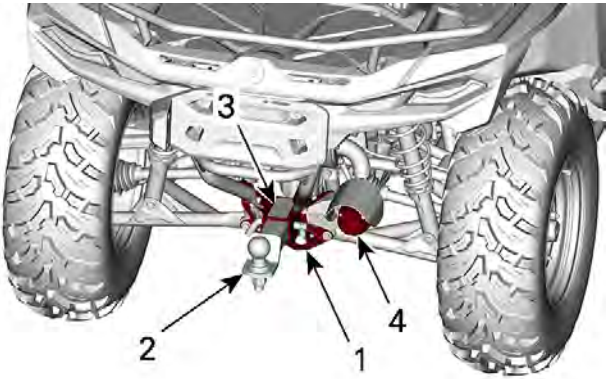

1. *Trailer Hitch Receptacle*
2. *Hitch Ball*
3. *Towing and Tongue Weight - Warning Label*
4. *Trailer Harness Plug*

HITCH DRAW BAR

The hitch draw bar comes with a 50 mm ball installed.

For towing refer to towing instructions label located at trailer hitch.

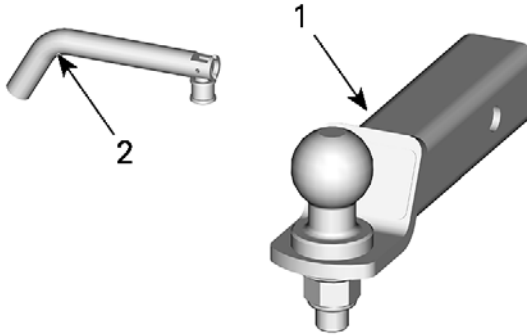

1. *Trailer Hitch Support*
2. *Hitch Pin*

⚠ WARNING
Ensure to install the proper ball size that matches the equipment to be towed.

NOTE:
Follow the trailer manufacturer instructions for proper attachment.

Installing the Hitch Draw Bar

1. Insert the draw bar in the receiver hitch.

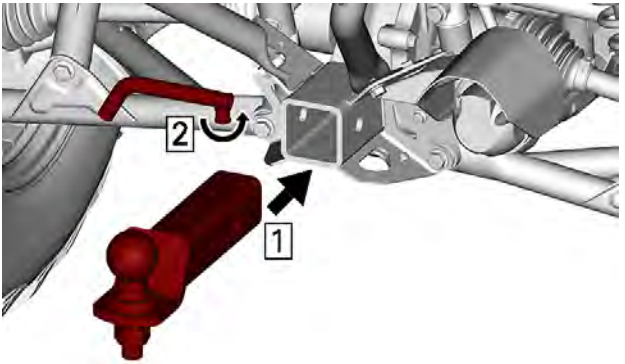

1. *Insert Draw Bar*
2. *Unfold Pin Lock*
2. Insert the pin through the draw bar and receiver hitch.

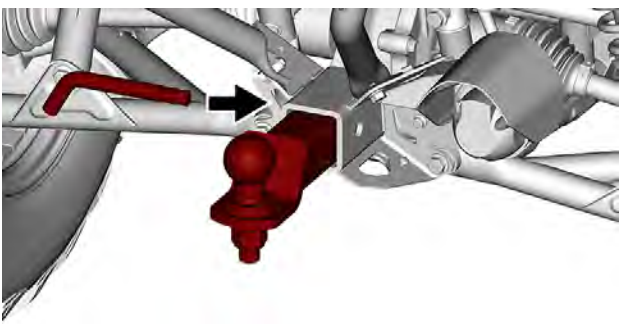

3. Secure the pin by folding the lock.

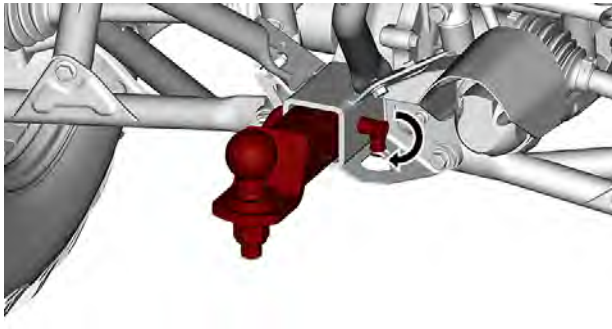

⚠ WARNING
Make sure the draw bar is secured properly.

TRAILER CONNECTOR

Trailer connector to be used if trailer is equipped with lights.

When a trailer is connected and the turn signals or hazard lights are in function, an indicator lamp located on the handlebar cover, blinks. Refer to *Indicator Lamps*.

NOTE:
The Trailer Flasher Module is designed for trailer lights of a total of 40W. If the trailer lights have a different power, the blink frequency will be affected.

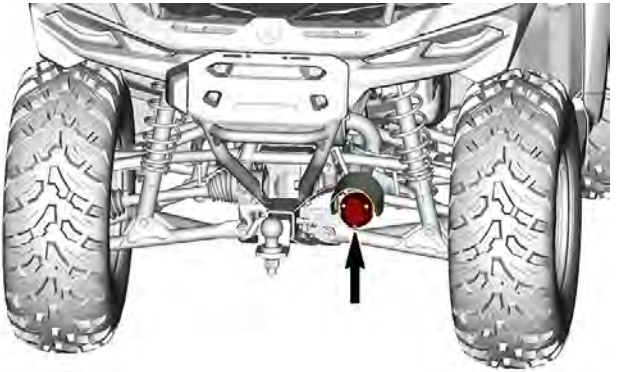

4.5” DIGITAL DISPLAY

MULTIFUNCTION DISPLAY
Lower Display

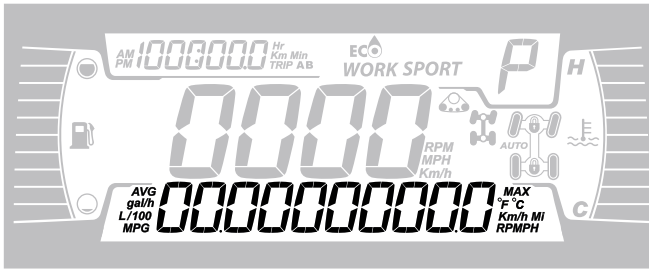

May display the following:

- RPM
- Speed statistics
- Engine Temperature
- Battery Voltage
- Settings
- Messages

Use LOWER button to change the displayed information.

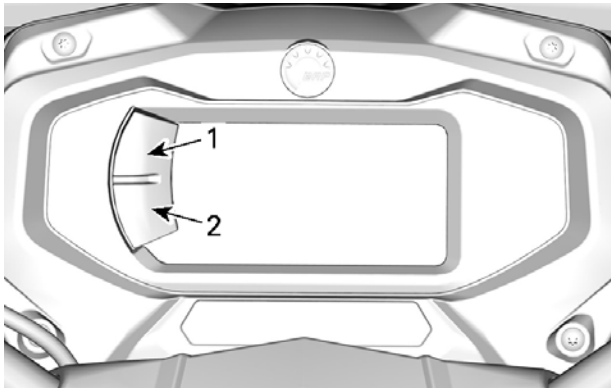

1. Upper button
2. Lower button

Left Lateral Display

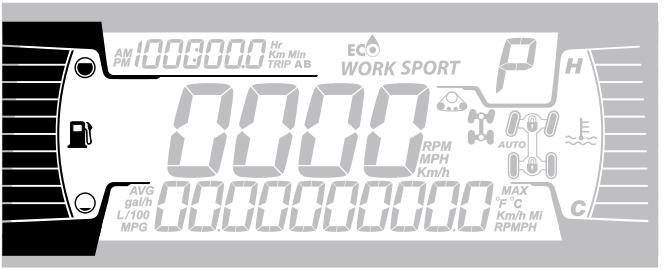

The left lateral display includes:

– Fuel level indicator

Right Lateral Display

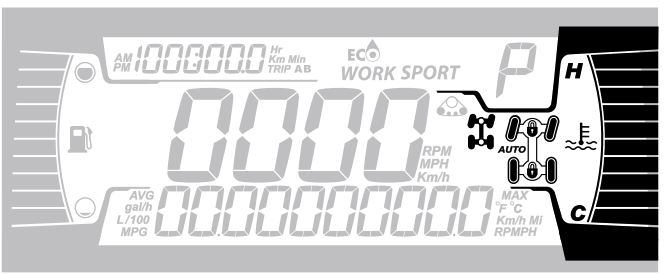

The right lateral display includes:

– Engine Temperature
– 2X4 / 4X4 telltale (if equipped)
– Front differential lock - Visco-4Lok icon (if equipped)

Icon	Description
	2X4 icon
	4X4 icon
	Front differential lock - Visco-4Lok icon

Central Display

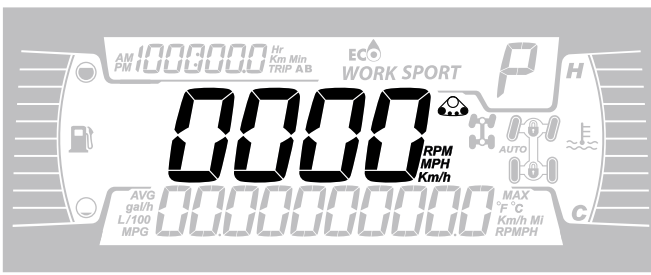

The central display includes:

– Vehicle speed in km/h or mph or RPM.
– Track kit Active (if equipped)

Transmission Position Display

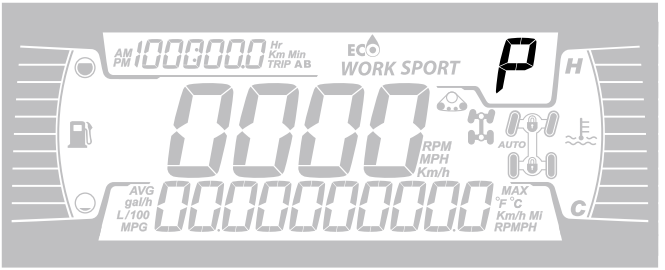

This display shows gear position of gearbox:

– P (Park)
– R (Reverse)
– N (Neutral)
– H (High Range)
– L (Low Range)
– – (Invalid Range)

Engine Mode Display

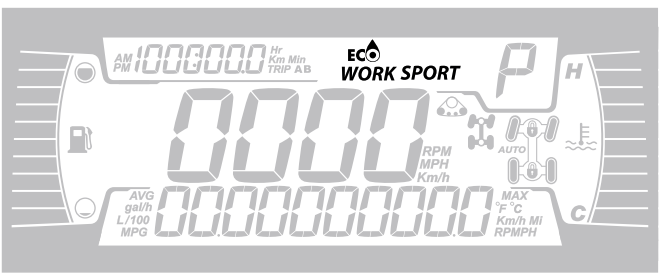

The engine mode display indicates the selected mode of operation:

– ECO or WORK (as per vehicle configuration)
– SPORT

To change between modes, hold LOWER button and short press LOWER button to cycle through available modes.

Engine Mode	Message at Activation
Eco	ECO MODE
Work	WORK MODE
Sport	SPORT MODE

Trip Display

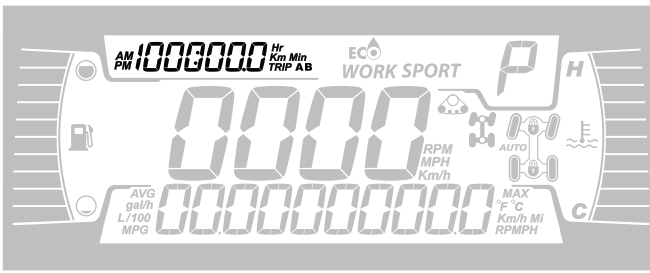

This display shows trip information:

– Cumulative distance odometer
– Trip A
– Trip B
– Vehicle hour meter
– Clock

Use UPPER button to change the displayed information.

Hold UPPER button to reset Trip A/B meters.

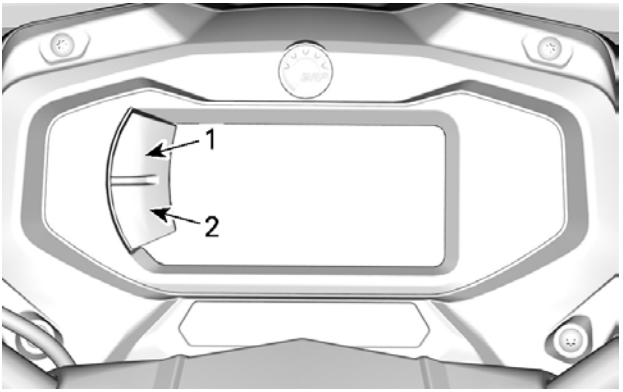

1. *Upper button*
2. *Lower button*

Indicator Lamps

Warning and Telltale Lights

WARNING and Telltale Lights	
	GREEN - Flashers
	Hazard Warning Flasher - All front and rear turn signals will flash
	ORANGE - Vehicle Malfunction
	BLUE - High Beam
	RED - The engine temperature is too high.

WARNING and Telltale Lights	
N	GREEN - Neutral
	RED - Brake lock lever is engaged or malfunction of the brake system
	RED - The battery voltage too low or problem with the electrical system
ABS	ORANGE - Malfunction of the ABS system
	RED - Low oil pressure Normally ON when engine is OFF
	ORANGE - Low fuel level
	ORANGE **Turn on**: Malfunction of the vehicle emissions control system **Blink**: Engine problems, the limp home mode is activated. Have the vehicle serviced immediately.

Icons and Indicators

Icons and Indicators	
SPORT	– Denotes SPORT mode is selected.
WORK	– Denotes WORK mode is selected.
	– When lit, indicates that a maintenance is required. – See your authorized Can-Am Off-road dealer or person of your

Icons and Indicators	
	own choosing for the maintenance.
	– Track kit active (when installed).
	– Denote front differential lock - Visco-4Lok is activated. When this option is available.
	– Denotes Speed Limiter is selected. – When this option is available.

SETTINGS

The buttons to navigate through menus are located on the left side of the LCD display.

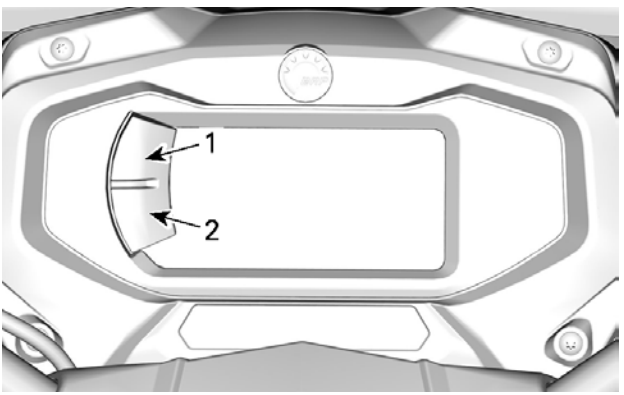

1. *Upper button*
2. *Lower button*

Setup

Using LOWER button, select **SETTINGS** and hold to enter setting menu.

Speed Limiter Mode

If available

Speed limiter mode allows the operator to set the desired maximum speed.

This is useful when operating in limited speed zones.

The operator must keep the throttle depressed to maintain forward speed.

Once the maximum speed is set, the operator can vary vehicle speed from stopped to the set speed using the throttle.

The set speed will be exceeded when the throttle is fully depressed. At that time, the speed limiter will be temporary deactivated (the icon will blink) until vehicle speed is under or equal the speed limiter's set point.

As you proceed under a constant speed setting, keep your attention level up to maintain good situational awareness.

Slowing down is a matter of releasing the throttle.

Activating Speed Limiter Mode

1. Press the gauge switch to go to the SETTINGS menu.
2. Select SPEED LIM, then you will have a choice of:

Unit selection	Information displayed
Metric (km/h)	– - - (Unlimited) – From 30 km/h to 100 km/h by step of 10 km/h.
Imperial (MPH)	– - - (Unlimited) – From 20 MPH to 65 MPH by step of 5 MPH.

The speed limiter indicator will turn on in the left lateral display.

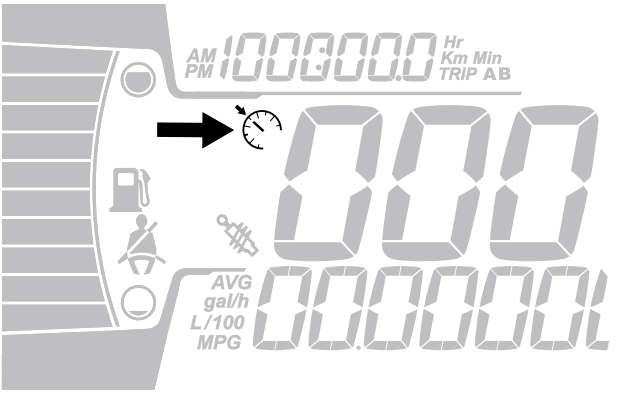

3. Hold menu button to confirm selected speed limit.

   Activating speed limiter mode of operation only limits the maximum speed available when depressing the throttle.

   The throttle must be held in to maintain forward speed.

   Speed can be varied from idle up to the set speed using the throttle once the speed limiter function is activated.

Deactivating Speed Limiter Mode

1. To deactivate speed limiter mode, in SETTINGS, select SPEED LIM and then select the – (unlimited) limit.

Maintenance Reset

To reset the maintenance message, refer to *Resetting the Message: Maintenance Required* in the *Maintenance Procedures* section.

NOTE:
Available only when the maintenance is due (after every 100 engine hours).

Fault Codes

Available only when at least one code is activated.

Using LOWER button, select **CODES** and hold to see actives fault codes.

Fault codes will be scrolled on the Lower Display.

Reset Stats

Using LOWER button, select **RESET STAT** and hold to reset.

Unit Selection

This multifunction gauge is factory preset in Imperial units but it is possible to change it to Metric units.

Using LOWER button, select **UNITS** and hold button to change units.

Setting Clock

All of the following action must be performed using the LOWER button.

1. Select **CLOCK** and hold to adjust clock.
2. Press the button to select clock display.
3. Push and hold the button for 1 second.
4. Press the button to select 12:00 AM PM or 24:00 time base.
5. Push and hold the button to acknowledge selection.
6. Press the button to change hours (hours flash).
7. Push and hold the button to acknowledge hour selection.
8. Press the button to switch to minutes (minutes flash).
9. Push and hold the button to acknowledge minutes selection.

Setting Language

The gauge display language can be changed.

Refer to an authorized Can-Am dealer for language availability and to setup the gauge to your preference.

Setting Brightness

The brightness of the LCD display can be adjusted.

Using LOWER button, select **BRIGHTNESS** and hold button to change brightness.

Using LOWER button, adjust brightness then push and hold the button to acknowledge selection.

DRIVING AID TECHNOLOGIES (IF EQUIPPED)

These systems actively manage braking and traction.

Under certain conditions, the driver may feel the actions taken by the systems in the form of reduced engine braking, vibrations or slight jerks in the handlebar, brake pedal or brake lever, which is normal.

ABS (Anti-lock Brake System)

This system prevents the wheels from locking during braking, which improves the stability of the vehicle and the contact of the tires on the ground.

Limitations: Low tire adhesion to the surface limits the braking ability. Even with ABS, the braking distance will be longer under the conditions of low adhesion.

eCBS (Electronic Combined Brake System)

This system actively manages the balance of the braking force between the front and rear axles.

BTC (Brake Traction Control)

This system actively manages the traction between the front wheels during the acceleration in order to prevent them from slipping.

This system is active only on the 4WD mode.

DTC (Drag Torque Control)

During deceleration, this system prevents the wheels from slipping due to the engine brake by requesting a light and limited engine torque request. When in 4WD mode, the DTC will be more noticeable eliminating most engine braking. This ensures proper ABS system operation.

⚠ WARNING

Unit modification, such as fitting a different tire model and/or size, may cause unwanted system behavior such as under or overreaction of the above system.

FUEL

While reading this Operator's Guide, remember that:

⚠ WARNING

Indicates a potential hazard which, if not avoided, could result in serious injury or death.

Fuel Requirements

NOTICE

Always use fresh gasoline. Gasoline will oxidize; the result is loss of octane, volatile compounds, and the production of gum and varnish deposits which can damage the fuel system.

Alcohol fuel blending varies by country and region. Your vehicle has been designed to operate using the recommended fuels, however, be aware of the following:

- Use of fuel containing alcohol above the percentage specified by government regulations is not recommended and can result in the following problems in the fuel system components:
  - Starting and operating difficulties.
  - Deterioration of rubber or plastic parts.
  - Corrosion of metal parts.
  - Damage to internal engine parts.
- Inspect frequently for the presence of fuel leaks or other fuel system abnormalities if you suspect the presence of alcohol in gasoline exceeds the current government regulations.
- Alcohol blended fuels attract and hold moisture which may lead to fuel phase separation and can result in engine performance problems or engine damage.

Recommended Fuel

The gasoline must have the following minimum octane requirements:

Use unleaded gasoline containing MAXIMUM 10% ethanol.

NOTICE

Never experiment with other fuels. Engine or fuel system damages may occur with the use of an inadequate fuel.

NOTICE

Do NOT use fuel from fuel pumps labeled E85.

Vehicle Fueling Procedure

⚠ WARNING

- **Fuel is flammable and explosive under certain conditions.**
- **Never use an open flame to check fuel level.**
- **Never smoke or allow flame or spark in vicinity.**
- **Always work in a well-ventilated area.**
- **Vehicle must be on a level surface to perform fueling.**

1. Stop engine.

⚠ WARNING

Always stop engine before refueling.

2. Have operator and/or passenger get off vehicle.

⚠ WARNING

Do not allow anyone to remain in the vehicle while fueling. If there is a fire or explosion during fueling, a vehicle occupant could be unable to quickly leave the area.

3. Unscrew slowly the fuel reservoir cap counterclockwise to remove it.

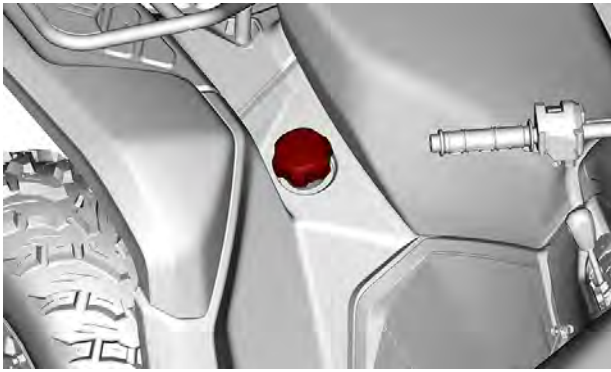

⚠ WARNING

If a differential pressure condition is noticed (whistling sound heard when loosening fuel reservoir cap) have vehicle inspected and/or repaired before further operation.

4. Insert the spout into the filler neck.
5. Pour fuel slowly so that air can escape from the tank and prevent fuel flow back. Be careful not to spill fuel.
6. Stop filling when the fuel reaches the bottom of filler neck. **Do not overfill.**

⚠ WARNING

Never top up the fuel tank before placing the vehicle in a warm area. As temperature increases, fuel expands and may overflow.

7. Fully tighten fuel reservoir cap clockwise until you hear a clicking noise.

⚠ WARNING

Always wipe off any fuel spillage from the vehicle.

BREAK-IN PERIOD

While reading this Operator's Guide, remember that:

⚠ WARNING
Indicates a potential hazard which, if not avoided, could result in serious injury or death.

Operation During Break-In

A break-in period of 10 operating hours or 300 km (200 mi) is required for the vehicle.

Engine

During the break-in period:

- Avoid full throttle operation.
- Avoid pressing the throttle lever more than 3/4 of the stroke.
- Avoid sustained accelerations.
- Avoid prolonged cruising speeds.
- Avoid engine overheating.

However, brief accelerations and speed variations contribute to a good break-in.

Brakes

⚠ WARNING
New brakes will not operate at their maximum efficiency until their break-in is completed. Braking performance may be reduced, so use extra caution. **Apply moderate braking force for the 40 to 50 first braking events.**

Belt

A new belt requires a break in period of 50 km (30 mi).

During the break-in period:

- Avoid strong acceleration and deceleration.
- Avoid pulling a load.
- Avoid high speed cruising.

BASIC PROCEDURES

While reading this Operator's Guide, remember that:

⚠ WARNING

Indicates a potential hazard which, if not avoided, could result in serious injury or death.

Waking Up the Electrical System

On models equipped with a D.E.S.S. key: press and release the START button for less than half a second and the electrical system will turn ON:

- For 30 seconds, **without** powering any equipment:
  - With the D.E.S.S. key not installed, **OR**
  - With the Engine Stop switch sets to the STOP position
- For 10 minutes, powering equipment:
  - With the D.E.S.S. key installed, **AND**
  - With the Engine Stop switch sets to the RUN position.

The electrical system will be shutdown after 30 seconds if either the D.E.S.S. key is removed **OR** the Engine Stop switch is set to the STOP position.

NOTICE

Waking up the electrical system repeatedly or using electrical equipment will discharge the battery and you may not be able to start the engine.

Starting the Engine

1. Make sure shift lever is set to PARK or NEUTRAL.

NOTE:
For your convenience, an override mode allows the engine to be started with the shift lever in any position. Press and hold the brake lever or the brake pedal while pressing the engine start button.

2. Insert key in ignition switch and turn to ON position or ensure D.E.S.S. key is installed on D.E.S.S. post.
3. Set the engine stop switch to RUN.
4. Press the engine start button and hold until the engine starts.

NOTICE

If engine does not start after a few seconds, do not hold the start position more than 10 seconds.
Refer to *Troubleshooting*.

5. Release the engine start button immediately when the engine has started.

NOTE:
If the battery is dead, engine cannot be started. Have the battery recharged or replaced.

Changing Gear Selection

1. Apply brakes and immobilize vehicle, then select the desired shift lever position.
2. Release brakes.

NOTICE

When changing gear selection, always completely stop the vehicle and apply the brakes prior to shifting. Damage to the gearbox may occur.

3. Gradually press the throttle lever to increase engine speed and thus engaging the continuously variable transmission (CVT).
4. At the opposite, when the throttle lever is released, the engine speed decreases.

Parking the Vehicle and Applying the Parking Brake

⚠ WARNING

Always apply the parking brake when the vehicle is not in operation by engaging the brake lock lever and moving the shifter on the PARK position.

⚠ WARNING

Avoid parking brake on steep slope as the vehicle may roll away.

⚠ WARNING

Avoid parking in places where hot parts can start a fire.

1. When stopped or parked, always bring shift lever to PARK position. This is especially important when parking on a slope. On very steep inclines or if the vehicle is carrying a cargo, the wheels should be blocked using rocks or bricks (or ideally, wheel chocks).
2. Select the flattest terrain available for parking.
3. Release throttle and use brakes to completely stop the vehicle.
4. Set shift lever in PARK position.
5. Engage the brake lock lever.
6. Push the engine stop switch to OFF position.
7. Remove key from ignition switch or remove D.E.S.S. key from D.E.S.S. post.

SPECIAL PROCEDURES

While reading this Operator's Guide, remember that:

⚠ WARNING

Indicates a potential hazard which, if not avoided, could result in serious injury or death.

Fuel Flooded Engine

If the engine does not start and it is fuel-flooded, this special mode can be activated to prevent fuel injection and to cut ignition while cranking. Proceed as follows:

1. Move shift lever in park position.
2. Install key on D.E.S.S. post or turn the ignition key in ON position.
3. Press completely and HOLD throttle lever.
4. Press the engine START button for 10 seconds.
5. Release throttle lever.
6. Press the START button again to allow starting.

If the engine does not start:

1. Unplug injector electrical connector
2. Clean the spark plug caps area then remove them.
3. Remove the spark plugs.
4. Crank engine several times.
5. Install new spark plugs if possible or clean and dry spark plugs.
6. Start engine as explained above.

If engine continues to flood, see an authorized Can-Am dealer.

NOTICE

Verify that there is no fuel in engine oil. If so, replace engine oil.

Water Into the CVT

The CVT drain plug is located on the rear portion of the CVT cover. Remove the LH side panel to access it.

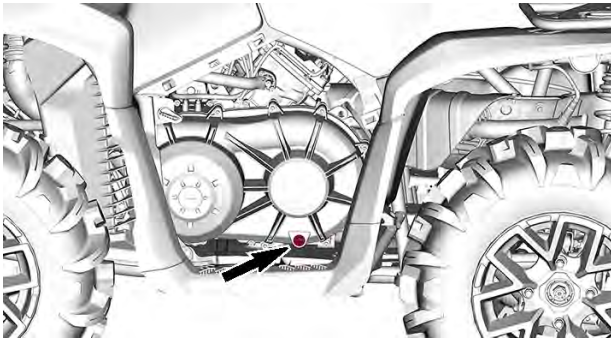

NOTICE

If water is present in the CVT, it could result in belt slippage. The engine will accelerate but the vehicle will remain still.

NOTICE

See an authorized Can-Am dealer to have the CVT inspected and cleaned.

1. Remove the CVT drain plug to validate if water is present.

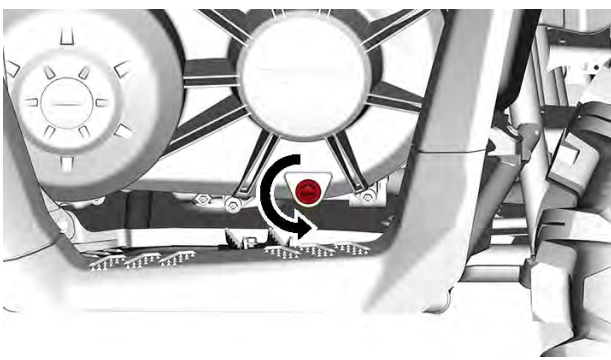

2. Reinstall slotted hexagonal 15 mm (19/32 in) drain plug.

Vehicle is Turned Over

When vehicle is turned over or stays tilted on the side, put the vehicle back on its wheel.

Inspect vehicle for damages.

⚠ WARNING

Never operate the vehicle if damaged.
Refer to an authorized Can-Am dealer.

If vehicle has no damage, refer to *Maintenance Procedures* and inspect the following.

- Inspect air filter housing for oil accumulation, if any oil is found, clean air filter and air filter housing.
- Check engine oil level and refill if necessary.
- Check engine coolant level and refill if necessary.
- Check gearbox oil level and refill if necessary.
- Check rear final drive oil level and refill if necessary.
- Start engine. If the oil pressure light stays on, stop engine immediately. See an authorized Can-Am dealer.

Whenever the vehicle is turned over, it should be inspected by an authorized Can-Am dealer.

Vehicle is Immersed in Water

Should the vehicle become immersed, immediately stop the engine.

Do not use any electrical equipment, including the winch.

It will be necessary to take the vehicle to an authorized Can-Am dealer as soon as possible. **NEVER ATTEMPT TO START THE ENGINE!**

NOTICE

Immersion of the vehicle can cause serious damage if the correct restart procedure is not followed.

As soon as vehicle is pulled out of water, carry out the following:

- Inspect the air filter housing to make sure water has drained.
- Drain CVT, refer to *Water Into the CVT*.

NOTICE

The vehicle should be serviced as soon as possible by an authorized Can-Am dealer.

TUNE YOUR RIDE

⚠ WARNING

Suspension adjustment could affect vehicle handling. Always take time to familiarize yourself with the vehicle's behavior after any suspension adjustment has been made.

Following are guidelines to fine-tune suspension.

Use suspension adjustment tool provided in the tool kit.

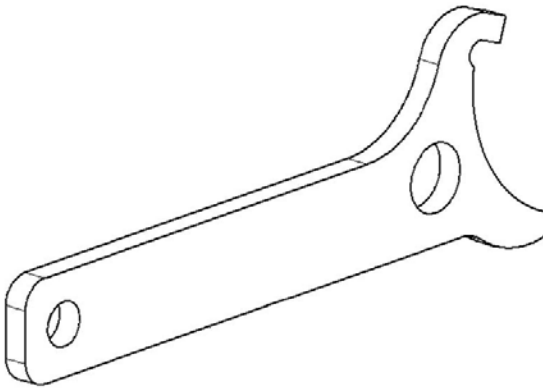

While reading this Operator's Guide, remember that:

⚠ WARNING

Indicates a potential hazard which, if not avoided, could result in serious injury or death.

Suspension Adjustment Guidelines

Your vehicle handling and comfort depend upon suspension adjustments.

⚠ WARNING

Suspension adjustment could affect vehicle handling. Always take time to familiarize yourself with the vehicle's behavior after any suspension adjustment has been made.

Choice of suspension adjustments vary with vehicle load, personal preference, riding speed and terrain condition.

The best way to set up the suspension, is to start from factory settings, then customize each adjustment one at a time.

Front and rear adjustments are interrelated. It may be necessary to re-adjust the rear shock absorbers after adjusting front shock absorbers for instance.

Test run the vehicle under the same conditions; trail, speed, load, etc. Change one adjustment and retest. Proceed methodically until you are satisfied.

Suspension Adjustments

Suspension Factory Settings

Factory settings are suitable for almost all conditions.

Take into consideration that an increase in ground clearance can affect the handling of the vehicle.

Front Suspension

Spring Preload
Cam position 3 (soft)

Rear Suspension

Spring Preload
Cam position 3 (soft)

Spring Preload Adjustment

Following are guidelines to fine-tune suspension. Use suspension adjustment tool provided in the tool kit.

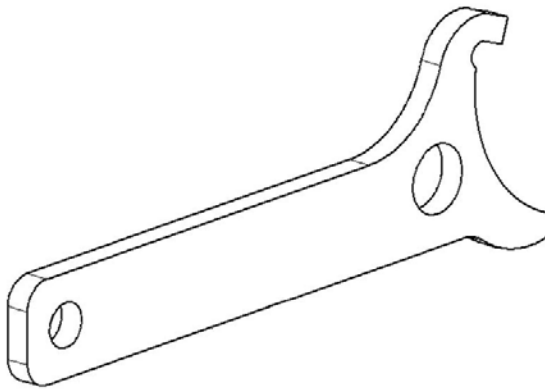

The spring preload affects the ground clearance of the vehicle.

Shorten the spring for a firmer ride and rough riding condition or when pulling a trailer.

Lengthen the spring for a softer ride and smooth riding condition.

NOTE:
Factory settings are suitable for almost all conditions. Take into consideration that an increase in ground clearance can affect the handling of the vehicle.

⚠ WARNING

The left and right shock adjustment on front or rear suspension must always be set to the same position.
Never adjust one shock only.
Uneven adjustment can cause poor handling and loss of stability, which could lead to an accident.

Lift the vehicle to adjust spring preload.

Adjust by turning adjusting cam.

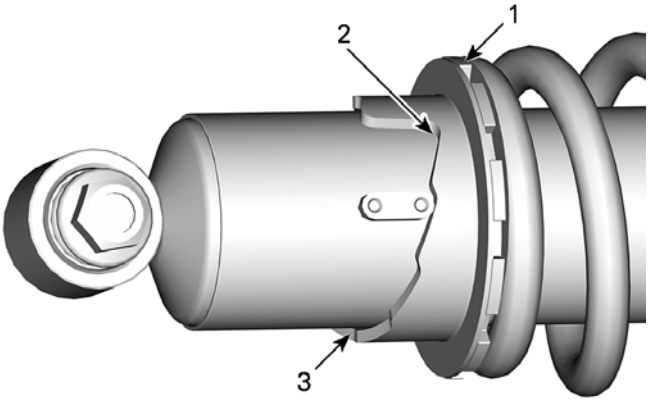

1. *Turn adjusting cam*
2. *Soft adjustment*
3. *Firm adjustment*

Dynamic Power Steering (DPS) Assist Level Adjustment (Models with DPS)

Models Equipped with a Visco-4Lock Front Differential
When the 4WDLock mode is selected, a special setting is automatically selected to give an optimal assist. It is not possible to change the DPS setting while the 4WDLock mode is selected.

The DPS mode cannot be changed if the transmission lever is set to REVERSE.

The tri-mode Dynamic Power Steering (DPS) offers easy steering assistance to the rider. The level of assistance will automatically adapt according to the vehicle's speed and rider's demand, in order to provide maximum steering power at lower speed where the demand is normally higher. As speed increases, the assistance is progressively reduced to keep maximum steering feel and precision to the rider.

It is possible to choose between three modes of assistance: Minimum, Medium and Maximum. Each mode will continue to automatically adapt to the vehicle's speed and rider's demand, so it does not require

to be changed when riding. These modes are used to set the level of assistance to match each rider's preferences.

The following DPS modes are preset in the vehicle.

DPS MODE	
DPS MAX.	Maximum steering assist
DPS MED.	Medium steering assist
DPS MIN.	Minimum steering assist

To change the DPS mode using the multifunction switch, the engine must be running. Wake up the electrical system is not enough to do this procedure.

To see which DPS mode is activated.

– Do a short press (1 second) on the DPS button.

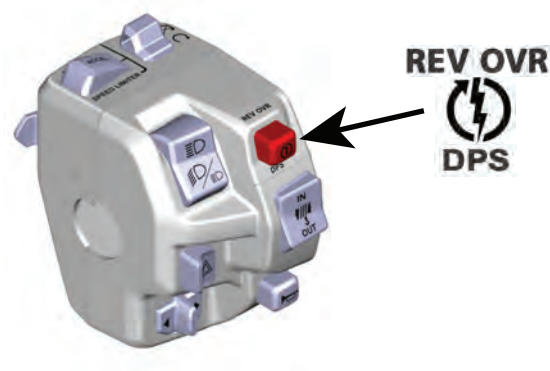

TYPICAL

– To return to the previous screen, wait 4 seconds.

To change the DPS mode.

– Do a short press (1 second) on the DPS button to see which DPS mode is activated.

– Do a long press (2 seconds) on the DPS button to select another mode. Repeat until the desired mode is activated.

NOTE:
It is also possible to change the DPS mode by doing a long press on either the LOWER button of the cluster or on the MENU switch (depending your model). To do this, the engine does not need to be running, but the electrical system must be awake.

LIFTING THE VEHICLE

General Safety Information for Lifting

⚠ WARNING

Never lift the front AND rear of the vehicle without securing the support points.
Never lift the vehicle only by the support points.

1. Engage the 4WD mode (if available).

NOTE:
4WD mode is engaged when engine is running and vehicle has moved about one meter.

2. Place the shift lever in PARK.
3. Lock the brakes.

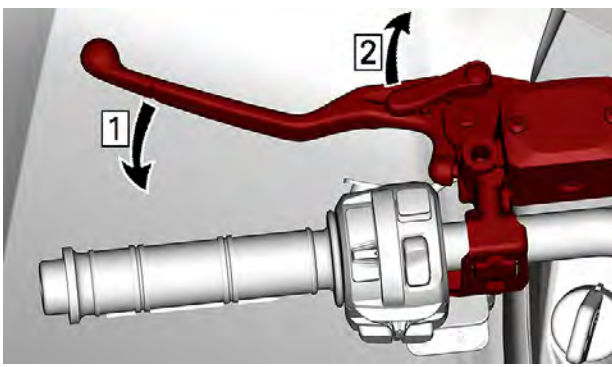

1. Apply brakes
2. Lock brakes

4. Lift the vehicle using a suitable lifting device and appropriate areas.

⚠ WARNING

Ensure all wheels are locked before lifting the vehicle. Do not exceed the lifting device capacity. Use only a device approved for lifting this type of vehicle. Do not move the vehicle using a lifting device. Refer to the manufacturer warnings and instructions prior to use.

5. Support vehicle with jack stands in accordance with the recommended support points.

   The following icon is stamped on the skid plate to indicate the location of the recommended support points.

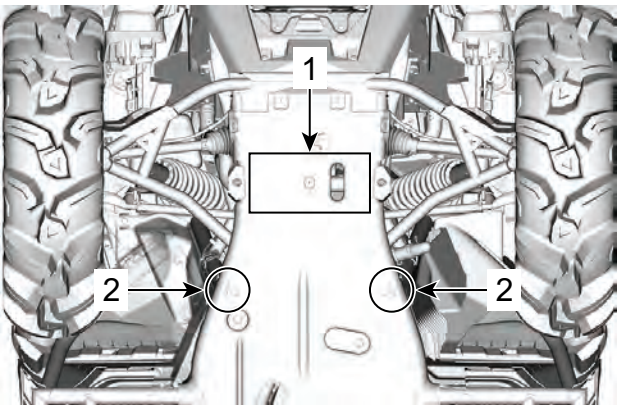

FRONT OF VEHICLE

1. Lifting area
2. Support points

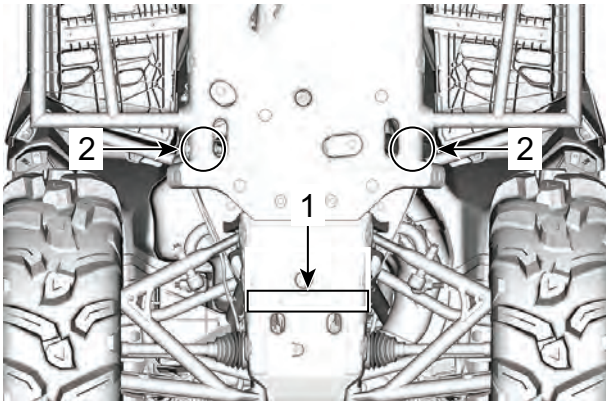

REAR OF VEHICLE

1. Lifting area
2. Support points

TRANSPORTING THE VEHICLE

When contacting a towing or transporting service, be sure to ask if they have a flatbed trailer, loading ramp or power ramp to safely lift the vehicle and tie-down straps. Ensure the vehicle is properly transported as specified in this section.

NOTICE

Do not tow this vehicle behind a car or other vehicle — towing can seriously damage the vehicle's drive system.

NOTICE

Avoid using chains to tie the vehicle — they may damage the surface finish or plastic components.

⚠ WARNING

To avoid severe injury or death or important components damages.

- **Never use the winch cable/rope to retain a vehicle during trailering.**
- **Never ride with the winch cable/rope attached to a load or another vehicle.**
- **Only use the winch to help a stuck vehicle (snow, mud, etc.).**
- **Always refer to the winch manufacturer's instruction before pulling loads.**

⚠ WARNING

Make sure seat, accessories and cargo are properly secured, or remove it to prevent from falling on the road and creating a hazard for following vehicles.

⚠ WARNING

Always transport the vehicle facing forward to avoid damaging the windshield or other components. Parts may detach during transport.

⚠ WARNING

Before attempting to mount vehicle onto a platform or a trailer, make sure to respect the following safety precautions.

SAFETY PRECAUTIONS	
Carrying equipment	The carrying item (platform or trailer or flat bed) must be of appropriate dimensions and capacity to safely support and transport the vehicle.
Hauling vehicle	Do not exceed vehicle hauling capacity and specifications. Ensure the trailer or platform is properly secured to the hauling vehicle hitch.
Visibility	Ensure you have a good visibility during the entire maneuver.
Terrain	The hauling vehicle and trailer must be on a leveled surface. Use wheel chocks on trailer and hauling vehicle to avoid any movement.
Ramps	Use ramps with proper rating and secure ramps to the trailer or platform. Avoid steep ramps.
Bystanders	Always make sure bystanders are not close to the vehicle or the trailering equipment while climbing up.
Seat and Accessories	Make sure the seat, accessories and cargo are properly secured, or remove it to prevent from falling on the road and creating a hazard for following vehicles.

Using Vehicle Power to Climb Onto Transporting Equipment

When vehicle can climb on its own power, proceed as follows:

1. Wear protective gear.
2. Use low gear only (if equipped).
3. When driving remain seated at all times.
4. Ensure proper alignment on rails or platform.
5. Start from a sufficient distance from the platform or the trailer to align the vehicle in a straight line with the ramps. Never attempt to turn while getting closer to the ramp. Rear wheels might not be aligned once you get to the ramp and vehicle may fall off.
6. Slowly climb the front wheels onto the ramp to verify alignment.
7. Back off the vehicle, verify ramps are still secure, then proceed at proper speed.
8. Carefully drive vehicle onto platform or trailer. Use sufficient speed to climb without spinning or abruptly accelerating. Avoid acceleration while on ramps to prevent ramps movement.
9. If trailer is inclined towards front, simply let vehicle roll in without acceleration.
10. Once vehicle is climbed, put shift lever to Park and engage the brake lock lever (if equipped).

    When vehicle cannot move on its own power, or in case overshooting is a risk or if any dangerous condition prevents for embarking on its own power, proceed using a winch.

Using a Winch to Pull Vehicle Onto Transporting Equipment

When vehicle cannot climb on its own power, proceed as follows:

⚠ WARNING

Have the help of an assistant. One person should be on the vehicle to have access to vehicle handlebar, brakes and winch switch, while the other person controls the environment and safety of the maneuver.

⚠ WARNING

Ensure the winch hook can be safely attached to a proper anchoring point. Use proper rigging.

NOTE:
If vehicle can be started safely, let engine idle during winching to avoid draining the battery.

1. Place shift lever to NEUTRAL (N).
2. If the vehicle is equipped with a winch, use the winch to roll the vehicle on the platform or trailer.
3. If the vehicle is not equipped with a winch, proceed as follows:
    1. Attach strap to lower front bumper anchor.
    2. Attach the strap to the winch cable of the towing vehicle.
    3. Pull the vehicle on the platform or trailer with the winch.
4. Put shift lever to Park and engage the brake lock lever (if equipped).

Securing Vehicle for Transport

When transporting this vehicle, secure it to a platform, trailer or in

pickup box with suitable tie-downs. Use of ordinary ropes is not recommended.

⚠ WARNING

To avoid severe injury or death or important components damages.

- **Never use the winch cable/rope to retain a vehicle during trailering.**
- **Never ride with the winch cable/rope attached to a load or another vehicle.**
- **Only use the winch to help a stuck vehicle (snow, mud, etc.).**
- **Always refer to the winch manufacturer's instruction before pulling loads.**

⚠ WARNING

Do not tow this vehicle behind a car or other vehicle. Use a trailer. Never tip this vehicle on end for transporting. The vehicle must be in its normal operating position (on all wheels).

Remember to:

- Unload vehicle racks before transportation.
- Ensure seat(s) is/are properly locked in position by pulling back and up several time.
- Set the shift lever to PARK position.
- Engage the brake lock lever.
- Secure the vehicle by the front and rear tie-down points.

⚠ WARNING

Make sure all seats, accessories and cargo are properly secured, or remove it to prevent from falling on the road and creating a hazard for following vehicles.

NOTICE

Securing vehicle at other locations may damage the vehicle.

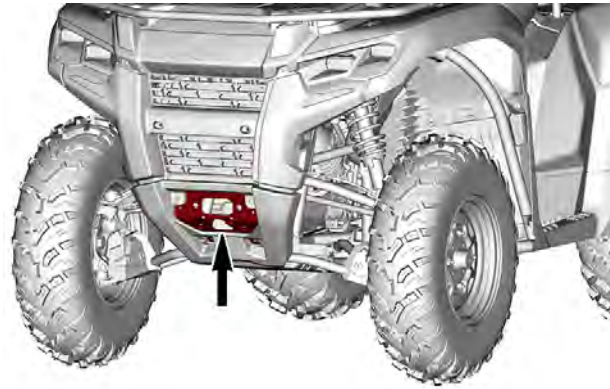

FRONT ATTACHMENT POINT

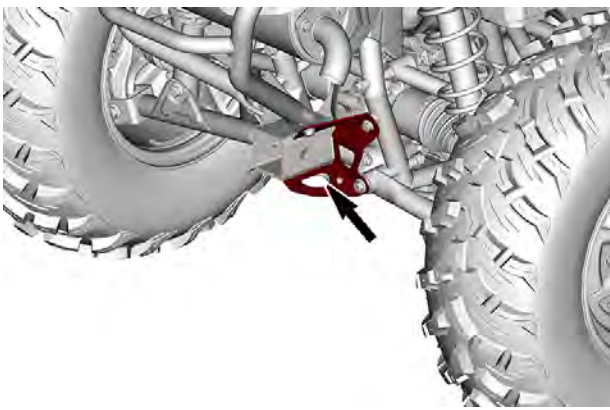

REAR ATTACHMENT POINT

Getting Vehicle Out of Trailer

⚠ WARNING

Vehicle may have moved during transport. Ensure vehicle is properly aligned with ramps before proceeding.

⚠ WARNING

Visibility will be greatly reduced when backing off from the trailer. Have the help of an assistant to ensure proper alignment and safe environment.

MAINTENANCE

MAINTENANCE SCHEDULE

Maintenance is very important for keeping your vehicle in safe operating condition.

The vehicle should be serviced as per the maintenance schedule.

Proper maintenance is the owner's responsibility. A warranty claim may be denied if, among other things, the owner or operator caused the problem through improper maintenance or use.

Perform periodic checks and follow the maintenance schedule. **The maintenance schedule does not exempt the pre-ride inspection.**

⚠ WARNING

Failure to properly maintain the vehicle according to the maintenance schedule and procedures can make it unsafe to operate.

EPA Regulation - Canadian and USA Vehicles

A repair shop or person of the owner's choosing may maintain, replace, or repair emission control devices and systems. These instructions do not require components or service by BRP or authorized Can-Am Off-road dealers.

Although an authorized Can-Am Off-road dealer has an in-depth technical knowledge and tools to service your vehicle, the emission-related warranty is not conditioned on the use of an authorized Can-Am Off--road dealer or any other establishment with which BRP has a commercial relationship.

Proper maintenance is the owner's responsibility. A warranty claim may be denied if, among other things, the owner or operator caused the problem through improper maintenance or use.

For emission-related warranty claims, BRP is limiting the diagnosis and repair of emission-related parts to the authorized Can-Am Off--road dealers. For more information, please refer to the *US EPA Emission-Related Warranty* contained in the *Warranty* section.

You must follow the instructions for fuel requirements in the fueling section of this manual. Even if gasoline containing greater than ten volume percent ethanol is readily available, the US EPA issued a prohibition against the use of gasoline containing greater than 10 vol % ethanol that applies to this vehicle. The use of gasoline containing greater than 10 vol % ethanol with this engine may harm the emission control system.

Air Filter Maintenance Guideline

Air filter maintenance should be adjusted according to riding conditions.

Air filter maintenance must be increased in frequency in the following dusty conditions:

- Riding on dry sand
- Riding on dry dirt covered surfaces
- Riding on snow covered surfaces
- Riding on dry gravel roads or similar conditions.

Riding in a group under these conditions increases the frequency of the air filter maintenance.

Types of Usage

Regular Use

If your vehicle is used in the following purposes, refer to the **Regular Duty** table.

- To ride in trails or do recreational activities,
- For occasional utility activity.

Severe Duty Conditions

If your vehicle is used in the following conditions, refer to the **SEVERE DUTY** table of the maintenance chart:

- Repeated hauling loads at more than 75% the maximum capacity.
  - The increased workload applied to the drive system accelerates the differential, gearbox / transmission, and engine oil life. This reduces internal component longevity if not replaced more frequently.
- Driving at excessive speeds for a prolonged amount of time.

Higher than average utility / commercial use requires more frequent fluid / wear component replacement than regular trail, recreational, or occasional utility purposes.

Deep Mud / Water Use

Whether your vehicle is an Xmr model or has been accessorized for deep mud or water use (especially by the addition of Mud ATV tires), this type of usage requires more frequent maintenance to be performed to ensure debris has not infiltrated mechanical components.

If you regularly ride in deep mud or water, refer to the **Deep Mud / Water** table of the maintenance chart.

After every ride, be sure to perform the following **Post Operation Care for Deep Mud / Water Environment**.

Post Operation Care for Deep Mud / Water Environment

- Rinse the vehicle and its components with fresh water
- Drain the CVT compartment and clean if any water or mud is found
- Inspect and clean engine air filters and engine air filter housing. Clean if any water or mud is found
- Clean radiator
- Clean debris around exhaust pipe and muffler area and the spark arrester.
- Visually inspect for any water accumulation in the vent hoses (fuel tank, gearbox, front differential and rear final drive). If there is water, bring the vehicle to your nearest authorized Can-Am Off--road dealer for inspection and servicing of main components related to the vents
- Clean front and rear shock absorbers to prevent seal damage from dust or dirt
- Clean drive shaft bellows and propeller shaft yokes and bellows.

Extreme Cold Condition

A 4-stroke engine that is operated in - 25°C (- 13°F) and below environment will require an increase in service and maintenance schedule.

Any combustion engine operated in such a low load and rather cold operating temperature collects an increased amount of condensation at every startup/warm-up.

Since the engine is not reaching operating temperatures for extended periods of time, the oil is starting to be strongly diluted with water and gas residue (more water content).

An engine needs to reach operating temperature, in order to be able to evaporate condensate out of the oil.

If daily usage (work or leisure driving cycle) is similar to those mentioned below, BRP strongly recommends changing the oil at least once a month.

Parameters of an increase in service and maintenance schedule:

- Engine not reaching the proper operating temperature during normal daily usage,
- Multiple starts and stops without reaching operating temperature,
- Short idle periods,
- Low RPM driving cycle in short distances without reaching operating temperature.

Maintenance Schedule

Make sure to perform proper maintenance at recommended intervals as indicated in the tables.

The maintenance chart intervals are based on 3 factors:

- Calendar time
- Vehicle hours
- Odometer reading.

Take in account whichever comes first to determine the maintenance threshold.

Your driving habits determines the factors you shall adhere too. For example:

- Someone who uses their vehicle every other weekend trail riding with friends would most likely follow the **odometer reading** to determine the maintenance interval.
- Someone who uses their vehicle seldomly over the year or only on a few occasions (hunting, camping) would most likely follow the **calendar time** to determine the maintenance interval.
- Someone who uses their vehicle daily / weekly for long periods of time such as agricultural / work would most likely follow the **vehicle hours** to determine the maintenance interval.

IMPORTANT: The following tables show the appropriate maintenance application for the first 3 years. For subsequent years, repeat the same pattern alternatively.

Regular Maintenance Overview			
Calendar Years	Vehicle Hours	Odometer	Regular Duty
1	100	3000 km (1900 mi)	**A**
2	200	6000 km (3700 mi)	**A** and **B**
3	300	9000 km (5600 mi)	**A**

Severe Duty and Mud/Water Maintenance Overview			
Calendar Years	Vehicle Hours	Odometer	Severe Duty and Deep Mud / Water
0.5	50	1500 km (900 mi)	**A+**
1	100	3000 km (1900 mi)	**A+** and **A**
1.5	150	4500 km (2800 mi)	**A+**
2	200	6000 km (3700 mi)	**A+** and **A** and **B**
2.5	250	7500 km (4700 mi)	**A+**
3	300	9000 km (5600 mi)	**A+** and **A**

REGULAR DUTY	A	B
A = Adjust **C = Clean** **I = Inspect** **L = Lubricate** **R = Replace** **T = Torque**	**Every year or 100 hours or 3000 km (1900 mi)**	**Every 2 years or 200 hours or 6000 km (3700 mi)**
Air and Fuel Delivery		
Engine air filter	**I, C or R**	
Air delivery components and function (Airbox, throttle body, ducts, clamps)*	**I, C**	
Fuel components and function (Fuel tank cap, fuel tank, hoses, clamps, leaks)*	**I**	
Fuel pump pressure		**I**
Body, Chassis and Accessories		
Frame condition	**I**	
Seat Latch	**I**	
Winch	**I, C**	
Engine and Cooling		
Engine oil and filter	**R**	
Valve clearance (regardless of calendar time)		**I, A**
Spark plugs (regardless of calendar time)		**R**
Engine seals and gaskets	**I**	
Engine cooling components (coolant concentration, coolant level, hose condition, clamps, leaks)*	**I, A**	

REGULAR DUTY	A	B
A = Adjust **C = Clean** **I = Inspect** **L = Lubricate** **R = Replace** **T = Torque**	**Every year or 100 hours or 3000 km (1900 mi)**	**Every 2 years or 200 hours or 6000 km (3700 mi)**
Engine coolant	**R** Every 5 years or 12 000 km (7500 mi)	
Radiator	**C**	
Exhaust and Emissions		
Fuel tank vent breather filter (Non-EVAP models)	**R**	
Canister vent pre-filter (CARB and EVAP models)		**R**
Exhaust components (gaskets, pipes, muffler condition, leaks)*	**I**	
Muffler spark arrester	**C**	
Debris around exhaust pipe and muffler area	**C**	
Brake		
Brake components and function (oil level, brake pads, brake discs, calipers, brake lines, master cylinder)*	**I, C, L, A**	
Brake fluid	**R** Every 2 years	
Drive		
Gearbox oil	**R** Replace at first 3000 km (1900 mi) and at 6000 km	

REGULAR DUTY	A	B
A = Adjust **C = Clean** **I = Inspect** **L = Lubricate** **R = Replace** **T = Torque**	**Every year or 100 hours or 3000 km (1900 mi)**	**Every 2 years or 200 hours or 6000 km (3700 mi)**
	(3700 mi), then follow the regular schedule	
Gearbox oil	**I, A**	**R**
Front differential oil	**I, A**	**R**
Rear final drive oil	**I, A**	**R**
Tires (wear and pressure)	**I, A**	
Wheel beadlock bolts (if equipped)	**T**	
Wheel lug nuts	**T**	
Drive components and function (Input and output shaft seals, drive shaft bellows, propeller shaft U-joints)*	**I, L**	
Controls		
Gearbox position lever operation	**I, A**	
Throttle cable (If equipped)	**I, A, L**	
Throttle operation	**I**	
Continuously Variable Transmission (CVT)		
Rollers in driven pulley	**I**	
CVT components and function (Centrifugal levers, drive pulley hub bearing, pDrive pulley rollers)*	**I, C**	**L**

REGULAR DUTY	A	B
A = Adjust **C = Clean** **I = Inspect** **L = Lubricate** **R = Replace** **T = Torque**	**Every year or 100 hours or 3000 km (1900 mi)**	**Every 2 years or 200 hours or 6000 km (3700 mi)**
Electrical		
Battery connections and condition	**I, C**	
Electronic modules (Fault codes and applicable software updates)	**I**	
Electrical harness routing	**I**	
Operation of control switches and lighting (All lights operation, all switches operations)*	**I**	
Vehicle Speed Sensor (VSS)		**C**
Steering		
Steering components and function (Steering column, tie-rods)*	**I**	
Steering column bushings		**I, C, L**
Suspension		
Suspension components and function (Shock absorber, spherical bearings, suspension arms)*	**I, C**	

*For an extensive list of maintenance actions to be performed, refer to your local dealership

SEVERE DUTY	A+	A	B
A = Adjust C = Clean I = Inspect L = Lubricate R = Replace T = Torque	Every 6 months or 50 hours or 1500 km (900 mi)	Every year or 100 hours or 3000 km (1900 mi)	Every 2 years or 200 hours or 6000 km (3700 mi)
Air and Fuel Delivery			
Engine air filter	I, C or R		
Air delivery components and function (Airbox, throttle body, ducts, clamps)*	I, C		
Fuel components and function (Fuel tank cap, fuel tank, hoses, clamps, leaks)*		I	
Fuel pump pressure			I
Body, Chassis and Accessories			
Frame condition		I	
Seat Latch		I	
Winch	I, C		
Engine and Cooling			
Engine oil and filter	R		
Valve clearance (regardless of calendar time)			I, A
Spark plugs (regardless of calendar time)			R

SEVERE DUTY	A+	A	B
A = Adjust **C = Clean** **I = Inspect** **L = Lubricate** **R = Replace** **T = Torque**	**Every 6 months or 50 hours or 1500 km (900 mi)**	**Every year or 100 hours or 3000 km (1900 mi)**	**Every 2 years or 200 hours or 6000 km (3700 mi)**
Engine seals and gaskets		**I**	
Engine cooling components (coolant concentration, coolant level, hose condition, clamps, leaks)*		**I, A**	
Engine coolant	**R** Every 5 years or 12 000 km (7500 mi)		
Radiator		**C**	
Exhaust and Emissions			
Fuel tank vent breather filter (Non-EVAP models)		**R**	
Canister vent pre-filter (CARB and EVAP models)			**R**
Exhaust components (gaskets, pipes, muffler condition, leaks)*		**I**	
Muffler spark arrester	**C**		
Debris around exhaust pipe and muffler area	**C**		

SEVERE DUTY	A+	A	B
A = Adjust **C = Clean** **I = Inspect** **L = Lubricate** **R = Replace** **T = Torque**	**Every 6 months or 50 hours or 1500 km (900 mi)**	**Every year or 100 hours or 3000 km (1900 mi)**	**Every 2 years or 200 hours or 6000 km (3700 mi)**
Brake			
Brake components and function (oil level, brake pads, brake discs, calipers, brake lines, master cylinder)*	**I, C, A**	**C, L**	
Brake fluid	**R** Every 2 years		
Drive			
Gearbox oil	**R** Replace at first 1500 km (900 mi) and at 3000 km (1900 mi), then follow the regular schedule		
Gearbox oil	**I, A**	**R**	
Front differential oil	**I, A**	**R**	
Rear final drive oil	**I, A**	**R**	
Tires (wear and pressure)	**I, A**		
Wheel beadlock bolts (if equipped)		**T**	
Wheel lug nuts	**T**		
Drive components and function (Input and	**I, L**		

SEVERE DUTY	A+	A	B
A = Adjust C = Clean I = Inspect L = Lubricate R = Replace T = Torque	**Every 6 months or 50 hours or 1500 km (900 mi)**	**Every year or 100 hours or 3000 km (1900 mi)**	**Every 2 years or 200 hours or 6000 km (3700 mi)**
output shaft seals, drive shaft bellows, propeller shaft U-joints)*			
Controls			
Gearbox position lever operation		**I, A**	
Throttle cable (If equipped)		**I, A, L**	
Throttle operation		**I**	
Continuously Variable Transmission (CVT)			
Rollers in driven pulley		**I**	
CVT components and function (Centrifugal levers, drive pulley hub bearing, pDrive pulley rollers)*		**I, C**	**L**
Electrical			
Battery connections and condition		**I, C**	
Electronic modules (Fault codes and applicable software updates)		**I**	

SEVERE DUTY	A+	A	B
A = Adjust C = Clean I = Inspect L = Lubricate R = Replace T = Torque	**Every 6 months or 50 hours or 1500 km (900 mi)**	**Every year or 100 hours or 3000 km (1900 mi)**	**Every 2 years or 200 hours or 6000 km (3700 mi)**
Electrical harness routing		**I**	
Operation of control switches and lighting (All lights operation, all switches operations)*		**I**	
Vehicle Speed Sensor (VSS)			**C**
Steering			
Steering components and function (Steering column, tie-rods)*	**I**		
Steering column bushings			**I, C, L**
Suspension			
Suspension components and function (Shock absorber, spherical bearings, suspension arms)*	**I, C**		

*For an extensive list of maintenance actions to be performed, refer to your local dealership

DEEP MUD / WATER	A+	A	B
A = Adjust C = Clean I = Inspect L = Lubricate R = Replace T = Torque	Every 6 months or 50 hours or 1500 km (900 mi)	Every year or 100 hours or 3000 km (1900 mi)	Every 2 years or 200 hours or 6000 km (3700 mi)
Air and Fuel Delivery			
Engine air filter	I, C or R		
Air delivery components and function (Airbox, throttle body, ducts, clamps)*	I, C		
Fuel components and function (Fuel tank cap, fuel tank, hoses, clamps, leaks)*		I	
Fuel pump pressure			I
Body, Chassis and Accessories			
Frame condition		I	
Seat Latch		I	
Winch	I, C		
Engine and Cooling			
Engine oil and filter	I, A	R	
Valve clearance (regardless of calendar time)			I, A
Spark plugs (regardless of calendar time)			R

DEEP MUD / WATER	A+	A	B
A = Adjust C = Clean I = Inspect L = Lubricate R = Replace T = Torque	**Every 6 months or 50 hours or 1500 km (900 mi)**	**Every year or 100 hours or 3000 km (1900 mi)**	**Every 2 years or 200 hours or 6000 km (3700 mi)**
Engine seals and gaskets		**I**	
Engine cooling components (coolant concentration, coolant level, hose condition, clamps, leaks)*		**I, A**	
Engine coolant	**R** Every 5 years or 12 000 km (7500 mi)		
Radiator	**C**		
Exhaust and Emissions			
Fuel tank vent breather filter (Non-EVAP models)		**R**	
Canister vent pre-filter (CARB and EVAP models)			**R**
Exhaust components (gaskets, pipes, muffler condition, leaks)*	**I**		
Muffler spark arrester	Clean every 500 km (300 mi) or 15 hours or 2 months		
Debris around exhaust pipe and muffler area	**C**		

DEEP MUD / WATER	A+	A	B
A = Adjust **C = Clean** **I = Inspect** **L = Lubricate** **R = Replace** **T = Torque**	**Every 6 months or 50 hours or 1500 km (900 mi)**	**Every year or 100 hours or 3000 km (1900 mi)**	**Every 2 years or 200 hours or 6000 km (3700 mi)**
Brake			
Brake components and function (oil level, brake pads, brake discs, calipers, brake lines, master cylinder)*	**I, C, A**	**C, L**	
Brake fluid	**R** Every 2 years		
Drive			
Gearbox oil	**R** Replace at first 3000 km (1900 mi) and at 6000 km (3700 mi), then follow the regular schedule		
Gearbox oil	**I, A**		**R**
Front differential oil	**I, A**		**R**
Rear final drive oil	**I, A**		**R**
Tires (wear and pressure)	**I, A**		
Wheel beadlock bolts (if equipped)		**T**	
Wheel lug nuts	**T**		
Drive components and function (Input and	**I, L**		

DEEP MUD / WATER	A+	A	B
A = Adjust C = Clean I = Inspect L = Lubricate R = Replace T = Torque	**Every 6 months or 50 hours or 1500 km (900 mi)**	**Every year or 100 hours or 3000 km (1900 mi)**	**Every 2 years or 200 hours or 6000 km (3700 mi)**
output shaft seals, drive shaft bellows, propeller shaft U-joints)*			
Controls			
Gearbox position lever operation		**I, A**	
Throttle cable (If equipped)		**I, A, L**	
Throttle operation	**I**		
Continuously Variable Transmission (CVT)			
Rollers in driven pulley		**I**	
CVT components and function (Centrifugal levers, drive pulley hub bearing, pDrive pulley rollers)*		**I, C**	**L**
Electrical			
Battery connections and condition		**I, C**	
Electronic modules (Fault codes and applicable software updates)		**I**	

DEEP MUD / WATER	A+	A	B
A = Adjust **C = Clean** **I = Inspect** **L = Lubricate** **R = Replace** **T = Torque**	**Every 6 months or 50 hours or 1500 km (900 mi)**	**Every year or 100 hours or 3000 km (1900 mi)**	**Every 2 years or 200 hours or 6000 km (3700 mi)**
Electrical harness routing		**I**	
Operation of control switches and lighting (All lights operation, all switches operations)*		**I**	
Vehicle Speed Sensor (VSS)			**C**
Steering			
Steering components and function (Steering column, tie-rods)*	**I**		
Steering column bushings			**I, C, L**
Suspension			
Suspension components and function (Shock absorber, spherical bearings, suspension arms)*	**I, C**		

*For an extensive list of maintenance actions to be performed, refer to your local dealership

Maintenance Records

Send photocopy of maintenance record to BRP if needed.

Pre-delivery	
Serial number: _____ Mileage / km: _____ Hours: _____ Date: _____ Dealer no: _____ Notes: _____	Signature/Print:
Refer to vehicle Pre-Delivery Bulletin for detailed installation procedures	

First inspection	
Mileage / km: _____ Hours: _____ Date: _____ Dealer no: _____ Notes: _____	Signature/Print:
For maintenance schedule refer to Maintenance Information section of this operator's guide	

Service	
Mileage / km: _____ Hours: _____ Date: _____ Dealer no: _____ Notes: _____	Signature/Print:
For maintenance schedule refer to Maintenance Information section of this operator's guide	

Service	
Mileage / km: _____ Hours: _____ Date: _____ Dealer no: _____ Notes: _____	Signature/Print:
For maintenance schedule refer to Maintenance Information section of this operator's guide	

Service	
Mileage / km: _____ Hours: _____ Date: _____ Dealer no: _____ Notes: _____	Signature/Print:
For maintenance schedule refer to Maintenance Information section of this operator's guide	

Service	
Mileage / km: _____ Hours: _____ Date: _____ Dealer no: _____ Notes: _____	Signature/Print:
For maintenance schedule refer to Maintenance Information section of this operator's guide	

Service	
Mileage / km: _____ Hours: _____ Date: _____ Dealer no: _____ Notes: _____	Signature/Print:
For maintenance schedule refer to Maintenance Information section of this operator's guide	

Service	
Mileage / km: _____ Hours: _____ Date: _____ Dealer no: _____ Notes: _____	Signature/Print:
For maintenance schedule refer to Maintenance Information section of this operator's guide	

Service	
Mileage / km: _____ Hours: _____ Date: _____ Dealer no: _____ Notes: _____	Signature/Print:
For maintenance schedule refer to Maintenance Information section of this operator's guide	

Service	
Mileage / km: _____ Hours: _____ Date: _____ Dealer no: _____ Notes: _____	Signature/Print:
For maintenance schedule refer to Maintenance Information section of this operator's guide	

Service	
Mileage / km: _____ Hours: _____ Date: _____ Dealer no: _____ Notes: _____	Signature/Print:
For maintenance schedule refer to Maintenance Information section of this operator's guide	

Service	
Mileage / km: _____ Hours: _____ Date: _____ Dealer no: _____ Notes: _____	Signature/Print:
For maintenance schedule refer to Maintenance Information section of this operator's guide	

Service	
Mileage / km: _____ Hours: _____ Date: _____ Dealer no: _____ Notes: _____	Signature/Print:
For maintenance schedule refer to Maintenance Information section of this operator's guide	

Service	
Mileage / km: _____ Hours: _____ Date: _____ Dealer no: _____ Notes: _____	Signature/Print:
For maintenance schedule refer to Maintenance Information section of this operator's guide	

Service	
Mileage / km: _____ Hours: _____ Date: _____ Dealer no: _____ Notes: _____	Signature/Print:
For maintenance schedule refer to Maintenance Information section of this operator's guide	

MAINTENANCE PROCEDURES

This section includes instructions for basic maintenance procedures.

Due to the complexity of some of the maintenance procedures, good mechanical skills are required.

If you are not comfortable with these procedures, do not hesitate to contact an authorized Can-Am dealer, repair shop or person of your own choosing.

⚠ WARNING

Unless otherwise indicated, the engine must be stopped and the key always removed before performing any maintenance

⚠ WARNING

Should removal of a locking device be required (e.g. lock tab, self-locking fastener, etc.) , always replace it with a new one.

Resetting the Message: Maintenance Required

1. Using the LOWER button (4.5” digital display) or the MENU button (7.6” digital display), select **RES MAIN** in **SETTINGS**.
2. Hold the button to reset the maintenance message.

AIR FILTER

Engine Air Filter Replacement Guideline

Engine air filter inspection and replacement frequency should be adjusted according to riding conditions as it is critical to ensure proper engine performance and life span.

Engine air filter inspection and replacement frequency must be increased for the following severe riding conditions:

– Riding on dry sand.
– Riding on dry dirt covered surfaces.
– Riding on dry gravel trails or similar conditions.
– Riding in areas with high concentration of seeds or crop husks.
– Riding in severe snow conditions.

NOTICE

When riding in dusty conditions or sand, the air box needs to be cleaned before every ride.

NOTE:
Riding in a group, under these conditions, increases the frequency of the air filter maintenance.

Removing the Air Filter

NOTICE

Never remove or modify any component in the air filter housing. Otherwise, engine performance degradation or damage can occur. The engine is calibrated to operate specifically with these components.

1. Remove the console, refer to *Removing the Console* in the *Equipment* section.
2. Unlock both air box cover latches.

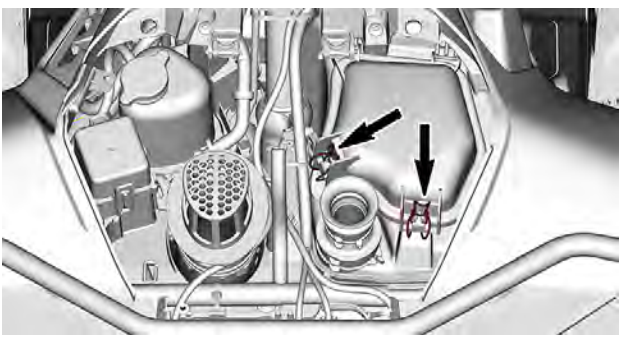

3. Lift the cover rearward.
4. Continue lifting movement until hinges can be removed from their supports then pull the cover forwards to remove it.

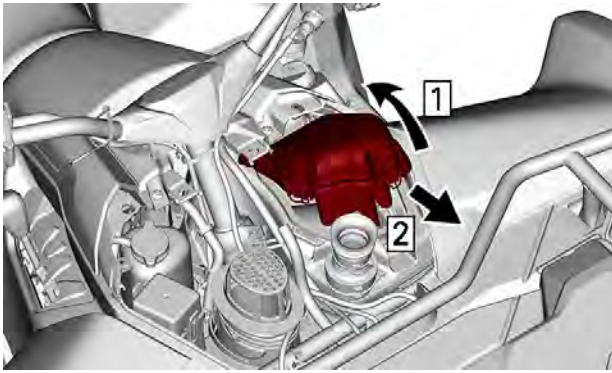

1. *Lift the cover rearward*
2. *Pull the cover forward to remove it*
5. Remove air filter

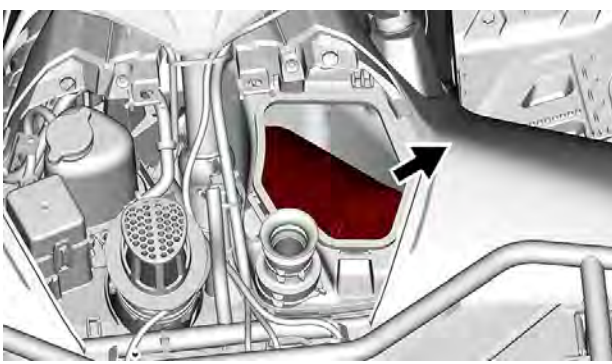

Cleaning the Paper Filter

1. Ensure that the foam filter is removed from paper filter.
2. Tap out heavy dust from the paper filter.

This will allow dirt and dust to get out of the paper filter.

NOTE:
Paper filter have a limited life span; replace filter if too dirty or clogged.

NOTICE

It is not recommended to blow compressed air on the paper element; this could damage the paper fibers and reduce its filtration ability when used in dusty environments. If engine air filter is too dirty and cannot be cleaned following the recommended procedure, it should be replaced.

NOTICE

Do not wash the paper filter with any cleaning solution.

Cleaning the Foam Filter

1. Spray the foam filter inside and out with a good air filter cleaner and follow manufacturer's instructions.

TYPICAL

2. Dry the foam filter completely.

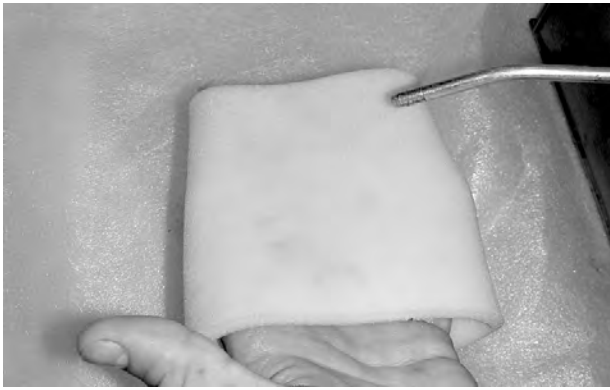

TYPICAL

NOTE:
A second application may be necessary for heavily soiled elements.

Inspecting the Engine Air Filter Housing

1. Check air filter housing dirty chamber for cleanliness.
   – If any debris or water are found, clean air filter housing chamber using a vacuum cleaner.

NOTICE

Do not blow compressed air into air filter housing chamber.

Duckbill Valve Cleaning

Visually check and physically squeeze the duckbill valve.

NOTICE

Make sure the duckbill valve is flexible and not inverted, damaged or plugged.

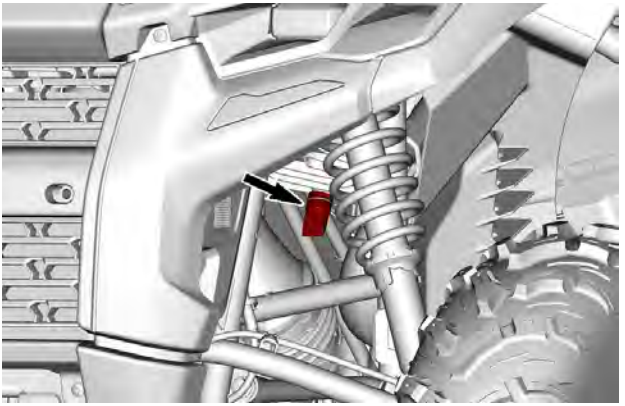

Installing the Air Filter

1. Insert the opened side of the air filter first in the air box.
2. Slide the air filter on the extension inside the air box.

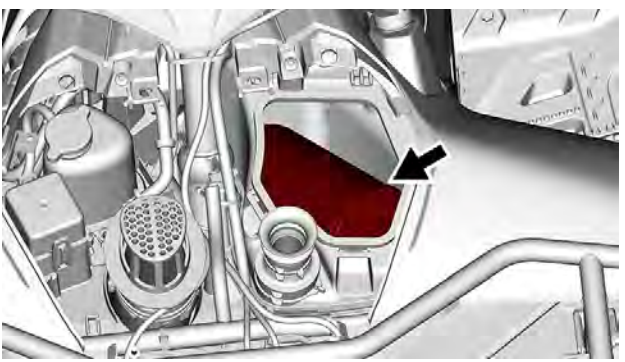

3. Insert front tabs of air filter cover first.
4. Push air filter cover down to close it.

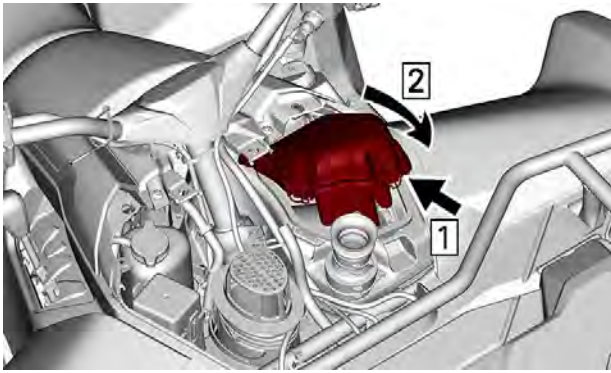

1. *Insert front tabs first*
2. *Close air filter cover*
5. Lock both air filter cover latches.

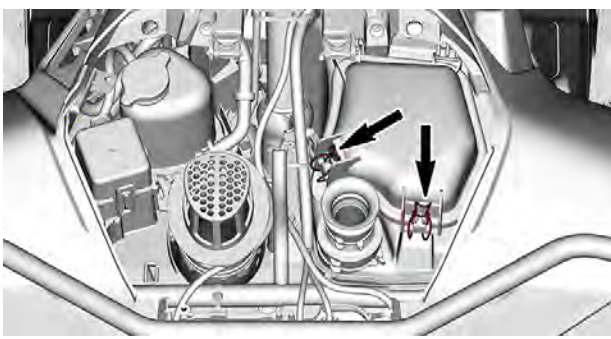

6. Reinstall the console.

ENGINE OIL

Recommended Engine Oil

Rotax® engines were developed and validated using the XPS® oil.

BRP recommends the use of its XPS engine oil or an equivalent at all time.

Damage caused by the use of an oil not suitable for the engine may not be covered by the BRP Limited Warranty.

XPS Recommended Engine Oil	
General purpose	5W40 synthetic oil
Cold temperature	0W40 synthetic oil
Warm temperature	10W50 synthetic oil

If the recommended XPS engine oil is not available:

- Use a 4-stroke SAE engine synthetic oil meeting or exceeding the following lubricant industry specifications.
- Always check the API service label certification on the oil container, it must contain at least one of the indicated standards.
  - **API service classification SN, or**
  - **JASO MA2**

Verifying the Engine Oil Level (Mono Cylinder)

NOTICE

Operating the engine with an improper level may severely damage engine.

NOTICE

Check the oil level when the engine is WARM.

1. Place the vehicle on a level surface.
2. Move the shifter on P and apply the brake lock lever.
3. Remove the RH side panel.
4. Start and let the engine run at idle for 60 seconds.
5. Stop engine.
6. Clean around dipstick to avoid foreign particles falling down the tube.

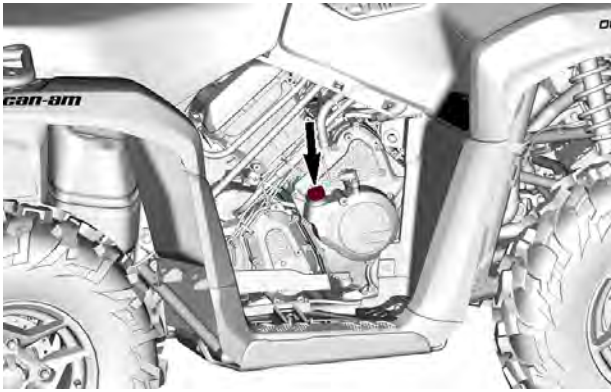

7. Unscrew dipstick then remove it and wipe clean.
8. Reinstall dipstick, screw in it completely.
9. Remove dipstick and check oil level. It should be near or equal to the upper mark.

1. MIN
2. MAX

If the level is between marks, reinstall the dipstick.

If the level is below the lower mark, add oil as follow:

– Place a funnel into the dipstick hole.
– Add a small amount of recommended oil and recheck oil level.
– Continue to add oil until the level reaches the upper mark.

NOTICE
Do not overfill. Wipe off any spillage.

Changing the Engine Oil

NOTICE

Engine oil and oil filter must be replaced at the same time.

Oil change and oil filter replacement should be done with a warm engine.

⚠ CAUTION

The engine oil can be very hot. Wait until engine oil is warm.

1. Place the vehicle on a level surface.
2. Move the shifter on P and apply the brake lock lever.
3. Remove the RH side panel.
4. Clean the dipstick area.
5. Remove the dipstick.
6. Place a drain pan under the engine drain plug area.
7. Clean the drain plug area.
8. Unscrew drain plug and discard the gasket ring.

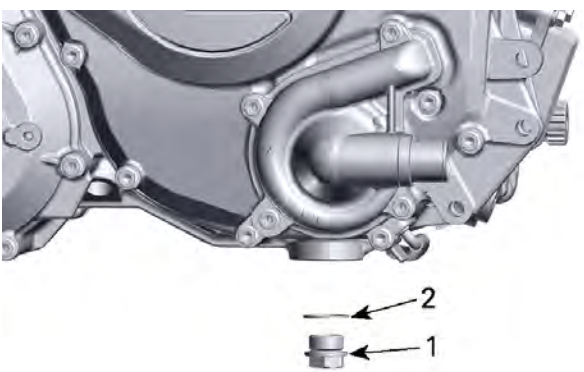

1. *Drain plug*
2. *Gasket ring (discard)*

9. Allow oil to drain completely from the crankcase.
10. Replace oil filter, refer to *Oil Filter*.
11. Clean the drain plug.
12. Install a NEW gasket ring on the drain plug.

NOTICE

Never use the gasket ring a second time. Always replace with a new one.

13. Install and tighten drain plug to the recommended specification.

Tightening Torque	
Drain plug	30 ± 2 Nm (22 ± 1 lbf-ft)

14. Refill engine, refer to *Recommended Engine Oil*.

NOTE:
For engine oil capacity, refer to *Technical Specifications*.

15. Start engine and let it idle for a 60 seconds.
16. Stop engine.
17. Check the oil level immediately, refer to *Verifying the Engine Oil Level*.
18. Refill as necessary.
19. Ensure oil filter and drain plug areas are not leaking.
20. Dispose oil and filter as per your local environmental regulations.

ENGINE OIL FILTER

Removing the Engine Oil Filter

1. Remove the front RH wheel.
2. Remove the inner fender to reach the oil filter cover.
3. Clean oil filter area.
4. Remove oil filter cover.
5. Remove oil filter.

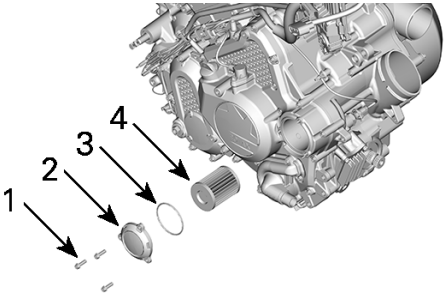

1. *Oil filter screw*
2. *Oil filter cover*
3. *O-ring*
4. *Oil filter*

Installing the Engine Oil Filter

1. Check and clean the oil filter inlet and outlet area for dirt and other contaminations.

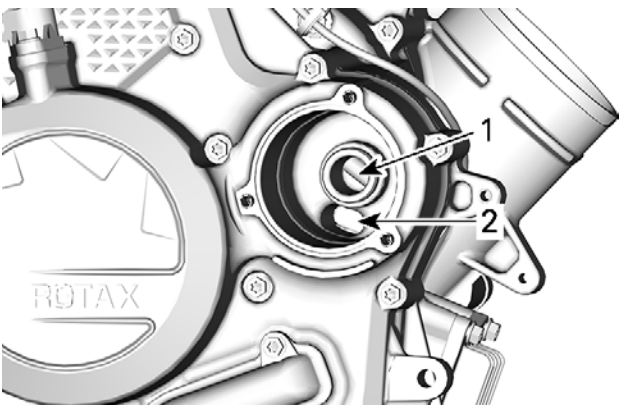

1. *Outlet bore to the engine oil providing system*
2. *Inlet bore from the oil pump to the oil filter*

2. Wet a NEW O-ring with engine oil and slip onto oil filter cover.
3. Install the new filter into the cover.
4. Apply engine oil to the seal on the open end of the oil filter.

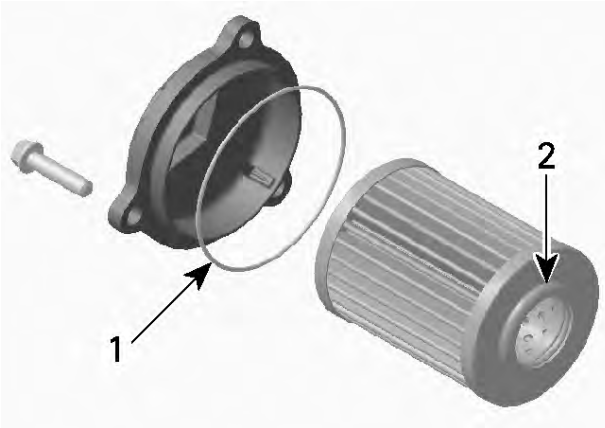

1. *Slightly oil*
2. *Slightly oil*

NOTICE

Pay attention to avoid pinching the O-ring during filter and cover installation.

5. Install the cover on the oil filter housing.
6. Tighten oil filter cover screws to specification.

Tightening Torque	
Oil filter cover screws	10 ± 1 Nm (89 ± 9 lbf-in)

7. Wipe off any oil spillage on engine.

FUEL VENT BREATHER FILTER

Replacing the Fuel Vent Breather Filter

The fuel vent breather filter is located under the console next to fuse box.

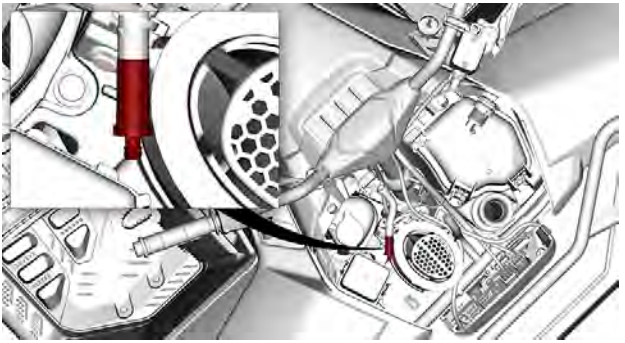

1. From the right-hand side of the console, remove hoses from the filter.

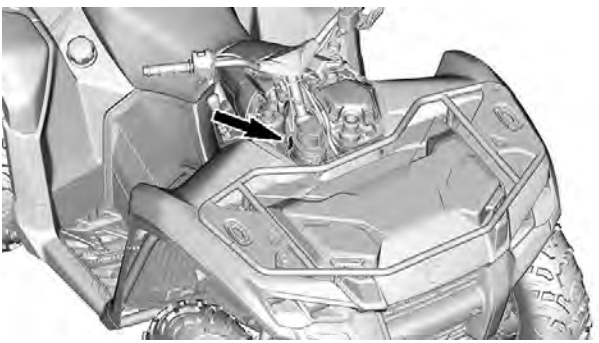

2. Remove and discard the filter.
3. Install the new filter with the arrow pointing towards the hose.

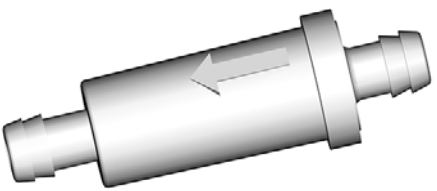

4. Make sure the filter is fully inserted and the hose is well secured.

RADIATOR

Inspecting and Cleaning the Radiator

Periodically check the radiator area for cleanliness.

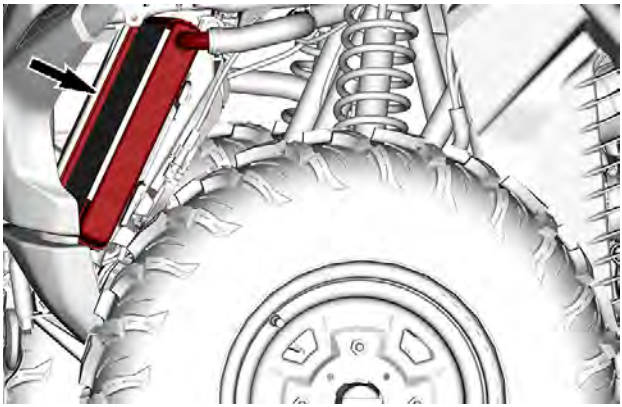

1. Remove both front air deflectors on each side of the radiator.

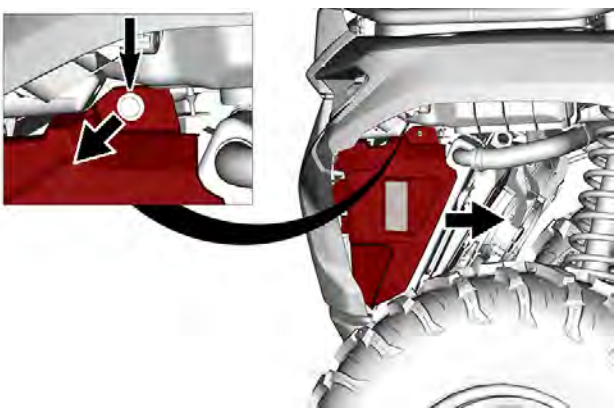

2. Inspect radiator and hoses for leaks or any damage.

3. Inspect radiating fins. They must be clean, free of mud, dirt, leaves and any other deposit that would prevent the radiator to cool properly.
4. Remove as much deposits as you can with your hands.

   If water is available in proximity, try rinsing the radiating fins.

⚠ CAUTION

Never clean radiator with your hands when it is hot.
Let the radiator cool down before cleaning.

NOTICE

Be careful not to damage the radiating fins when cleaning.
Do not use any object/tool that could damage the fins.
The fins are purposely thin parts to allow efficient cooling.
When hosing, use low pressure only.
Never use a HIGH PRESSURE washer.

5. In some case, the removal of the radiator fan may be necessary to clean radiator carefully.

   1. Remove screws securing the radiator fan to radiator.

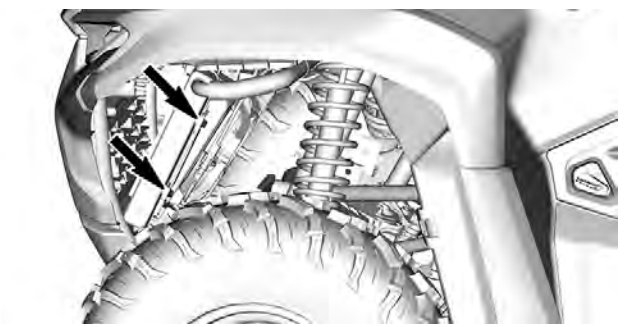

   2. Disconnect the radiator fan connector.

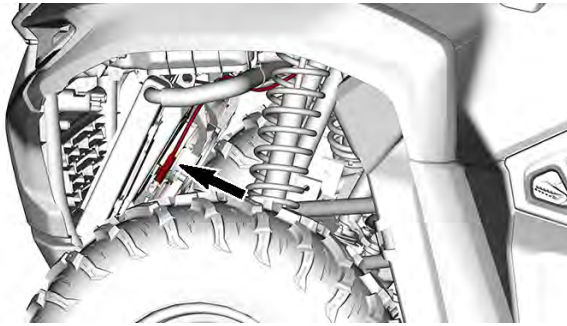

3. Pull the radiator fan towards the left of the vehicle.

6. See an authorized Can-Am dealer, repair shop or person of your own choosing to check the performance of the cooling system.

ENGINE COOLANT

Recommended Engine Coolant

XPS Recommended Engine Coolant
XPS Extended life pre-mixed coolant
If the Recommended XPS Engine Coolant Is Not Available
Distilled water and antifreeze solution (50% distilled water, 50% antifreeze)

NOTICE

Always use ethylene-glycol antifreeze containing corrosion inhibitors specifically for internal combustion aluminum engines.

Verifying the Engine Coolant Level

⚠ WARNING

Check coolant level with engine cold.
Never add coolant in cooling system when engine is hot.

NOTICE

A cooling system that frequently requires coolant is the indication of leaks or engine problems. See an authorized Can-Am dealer.

1. Place vehicle on a level surface.
2. Remove the console. Refer to *Removing the Console* in *Equipment*.

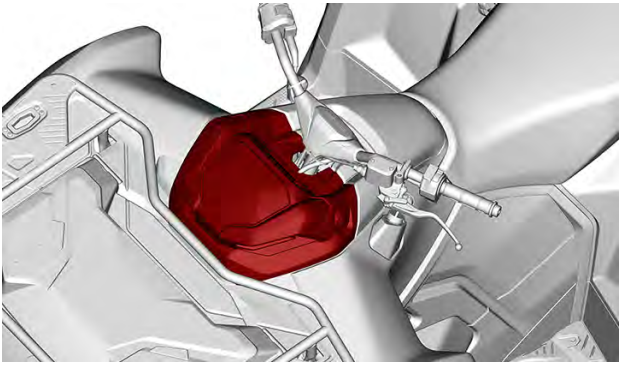

3. Check the coolant level, the liquid should be between MIN. and MAX. level marks of coolant reservoir.

NOTICE

When checking level at temperature lower than 20 °C (68 °F), it may be slightly lower than MIN. mark.

4. If required, remove the coolant reservoir cap to add coolant.

⚠ WARNING

Do not remove the coolant reservoir cap if engine is hot.

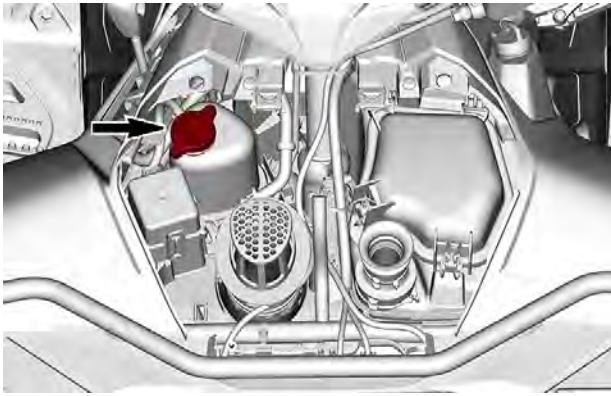

NOTE:
Use a funnel to avoid spillage. **Do not overfill.**

5. Properly reinstall and tighten reservoir cap.
6. Reinstall the console.

Replacing the Engine Coolant

⚠ WARNING
In order to avoid potential burns, do not remove the pressure cap or loosen the coolant drain plug if the engine is hot.

1. Remove the cooling system pressure cap.
2. Unscrew coolant drain plug partially to drain the coolant into a suitable container.

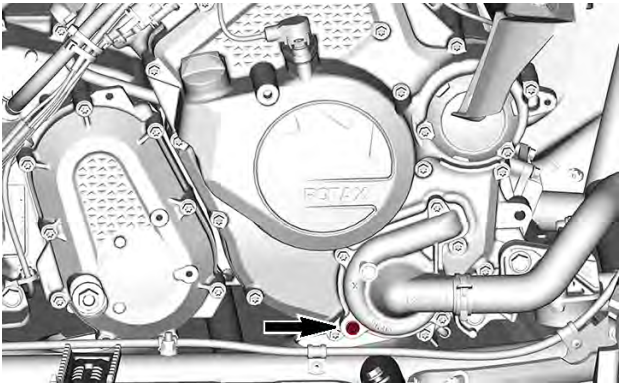

3. To finalize the complete emptying of the cooling system, disconnect the lower radiator hose from the water pump cover and drain the remaining coolant into a suitable container.
4. Tighten the coolant drain plug to specification.

Tightening Torque	
Coolant drain plug	10 ± 1 Nm (89 ± 9 lbf-in)

5. Reinstall radiator hose.
6. Fill cooling system with coolant, refer to *Bleeding the Cooling System* procedure.

Bleeding the Cooling System

1. Remove the pressure cap.
2. Fill coolant system until it is full up to the Max line on the coolant tank.

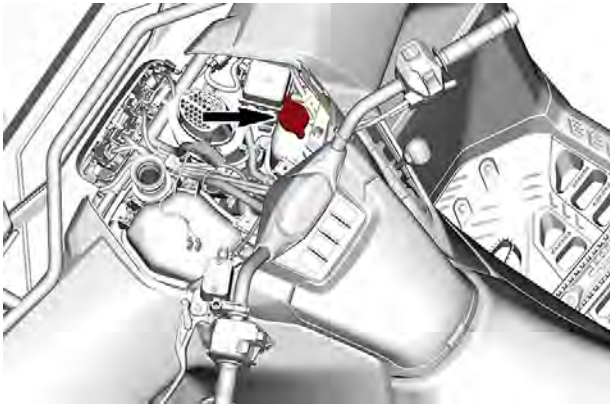

3. Install the pressure cap.
4. Run engine at idle until the cooling fan cycles on for a second time.
5. Stop the engine and let it cool down.

⚠ WARNING

In order to avoid potential burns, do not remove the pressure cap if the engine is hot.

6. When the engine is cool, check the coolant level and add coolant if required.
7. After the next ride, check the coolant level. Add coolant as required. Refer to *Verifying the Engine Coolant Level*.

EXHAUST SYSTEM

Cleaning the Area Surrounding the Exhaust System

⚠ WARNING

Debris accumulation could lead to a vehicle fire when the exhaust system is hot and the debris are dried.
In some cases, that could result in serious properly damages, injuries or even death.
Clean often and regularly the area surrounding the exhaust system when riding in swamp, bog, hay or dead leaves.
In other situations, clean as per maintenance schedule requirement.
Also, check all exhaust heat shields for damage regularly and replaced when needed.

⚠ CAUTION

Never perform this operation immediately after the engine has been running because exhaust system is very hot.

1. From the rear of the vehicle, clean the areas around the muffler.
2. Clean the areas around the exhaust pipe and the exhaust manifold.

⚠ WARNING

Clean also under the heat shields.

Inspecting and Cleaning the Muffler Spark Arrester

⚠ CAUTION

Never perform this operation immediately after the engine has been running as exhaust system is very hot.

1. Remove and discard the tail pipe lock washers and screws.

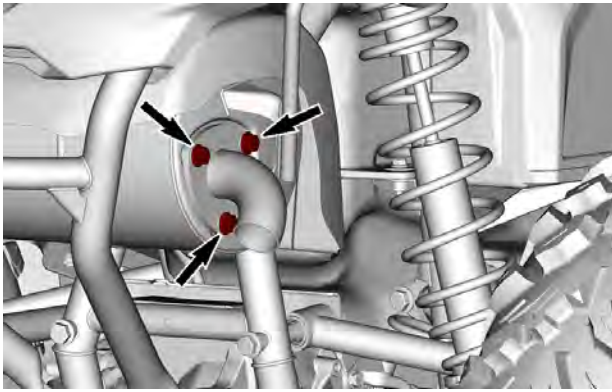

2. Remove the exhaust tail pipe with spark arrester and the gasket (discard it).

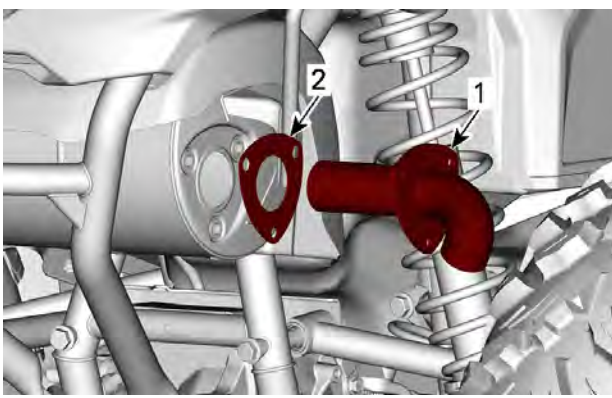

1. *Exhaust tail pipe with spark arrester*
2. *Gasket (discard)*
3. Remove carbon deposits from the spark arrester using a soft metallic brush.

NOTICE
Be careful to avoid damaging spark arrester mesh.

4. Inspect spark arrester mesh for any damages. Replace as required.
5. Inspect the spark arrester chamber in muffler. Remove any debris as required.
6. Install the tail pipe with a new gasket and lock washers.
7. Secure the tail pipe using new screws. Tighten them to specification.

Tightening Torque	
Tail pipe screws	22 ± 2 Nm (16.2 ± 1.5 lbf-ft)

GEARBOX

Recommended Gearbox Oil

The XPS oil is specially formulated to meet the lubrication requirements of this gearbox. BRP strongly recommends the use of its XPS oil.

NOTICE
Do not use another type of oil when servicing.

XPS Recommended Gearbox Oil
75W140 Synthetic gear oil
Alternative, or if not available
75W 140 API GL-5 Synthetic gear oil

Verifying the Gearbox Oil Level

1. Place vehicle on a level surface.
2. Set the shifter in park position.
3. Remove the RH side panel, refer to *Side Panel* in *Equipment*.
4. Remove the gearbox oil level plug and the O-ring.

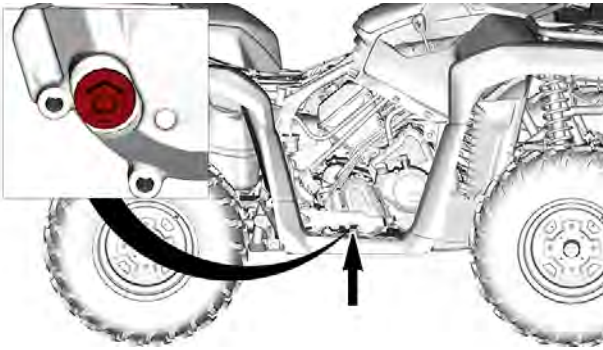

5. Check oil level. The oil should be level with the bottom of the oil level hole.

NOTICE

Operating the gearbox with an improper oil level may severely damage gearbox.

6. Install the oil level plug with O-ring. Tighten plug as per specification.

Tightening Torque	
Oil level plug	5 ± 0.6 Nm (44 ± 5 lbf-in)

Changing the Gearbox Oil

1. Place the vehicle on a level surface.
2. Set shifter in park position.
3. Clean the drain plug area.

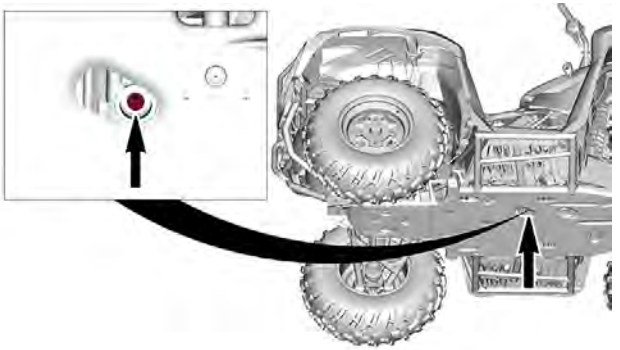

4. Place a drain pan underneath the oil drain plug area.
5. Remove the drain plug.
6. Remove the gearbox oil level plug and the O-ring.

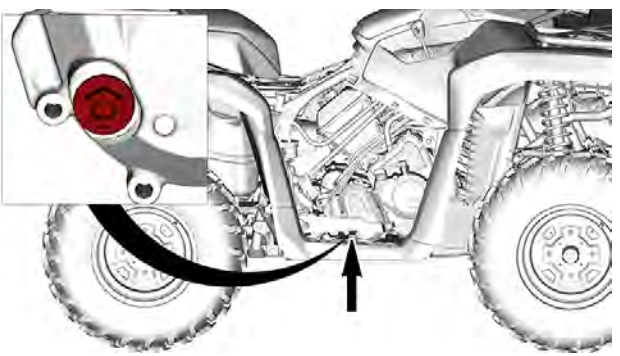

7. Let oil completely drain from gearbox.
8. Clean drain plug from any metallic particles.
9. Install the drain plug.

Tightening Torque	
Drain plug	20 ± 2 Nm (15 ± 1 lbf-ft)

10. Refill the gearbox. When full, the oil should be level with the bottom of the oil level orifice.

NOTICE

Use ONLY the recommended type of oil.

11. Manually, install the oil level plug with the O-ring.
12. Tighten the oil level plug to specification.

Tightening Torque	
Oil level plug	5 ± 0.6 Nm (44 ± 5 lbf-in)

13. Wipe off any spillage.

FRONT DIFFERENTIAL

Verifying the Front Differential Oil Level

1. Place the vehicle on a level surface.
2. From the LH front side, clean the filler plug area prior to checking oil level.

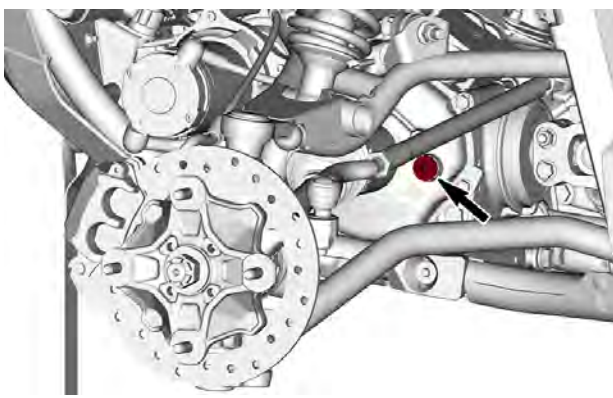

WHEEL REMOVAL IS NOT NECESSARY

3. Remove the filler plug.
4. Check oil level. The oil should be level with the bottom of the oil level orifice.
5. If required, add recommended differential oil.
6. Reinstall the filler plug.

Tightening Torque	
Filler plug	16 ± 3 Nm (142 ± 27 lbf-**IN**)

Recommended Front Differential Oil

The XPS oil is specially formulated to meet the lubrication requirements of this differential. BRP strongly recommends the use of its XPS oil.

NOTICE
Do not use another type of oil when servicing.

XPS Recommended Front Differential Oil
75W90 Synthetic gear oil
Alternative if XPS Product is not Available
75W90 (API GL-5) synthetic gear oil

Changing the Front Differential Oil

1. Place vehicle on a level surface.
2. Set shifter in park position.
3. From underneath the vehicle, clean the drain plug area.

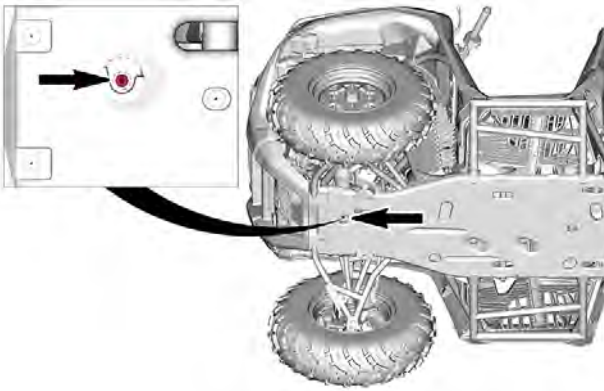

4. Place a drain pan under the front differential area.
5. Remove the drain plug.
6. Remove the filler plug.

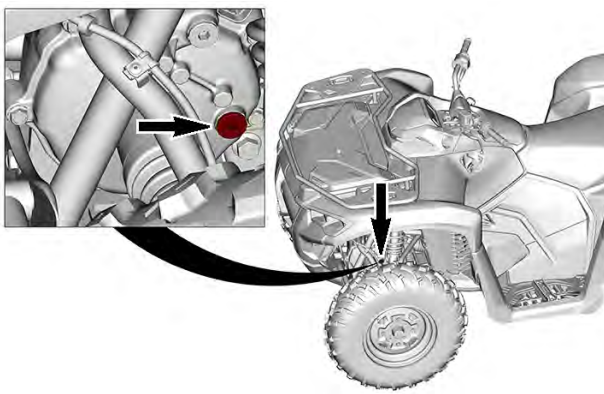

7. Let oil drip completely.
8. Install the drain plug.

Tightening Torque	
Drain plug	2.5 ± 0.5 Nm (24 ± 4 lbf-in)

9. Refill the differential with recommended oil for optimal performance.
10. For the differential oil capacity, refer to *Technical Specifications*.
11. Reinstall the filler plug.

Tightening Torque	
Filler plug	16.5 ± 2.5 Nm (146 ± 22 lbf-in)

REAR FINAL DRIVE

Verifying the Rear Final Drive

1. Visually, check the rear final drive housing for damages or oil leaks.
2. If a problem is detected, see your authorized Can-Am dealer quickly for repair.

Recommended Rear Final Drive Oil

The XPS oil is specially formulated to meet the lubrication requirements of this final drive unit. BRP strongly recommends the use of its XPS oil.

NOTICE
Do not use another type of oil when servicing.

XPS Recommended Final Drive Oil
75W90 Synthetic gear oil
Alternative if XPS Product is not Available
75W90 (API GL-5) synthetic gear oil

Changing the Rear Final Drive Oil

1. Place vehicle on a level surface.
2. Set the shifter in park position.
3. From underneath the vehicle, clean the drain plug area.

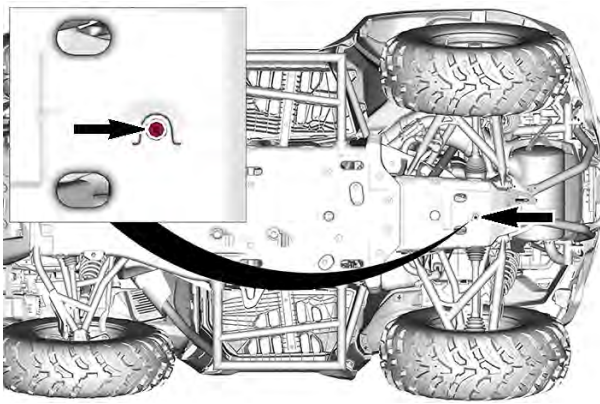

4. Place a drain pan under the rear final drive area.
5. Remove the drain plug.
6. Remove the filler plug.

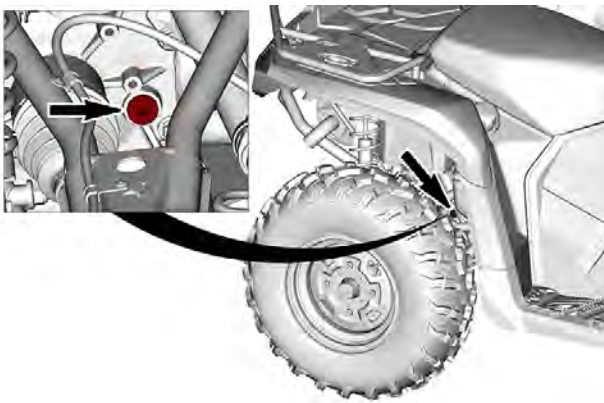

7. Let oil drip completely.
8. Install the drain plug.

Tightening Torque	
Drain plug	2.5 ± 0.5 Nm (24 ± 4 lbf-in)

9. Refill final drive with recommended oil for optimal performance.
10. For the oil capacity, refer to *Technical Specifications*.
11. Reinstall the filler plug.

Tightening Torque	
Filler plug	16.5 ± 2.5 Nm (146 ± 22 lbf-in)

SPARK PLUGS

Removing the Spark Plug

1. Remove the seat.
2. Unplug the ignition coil connector.

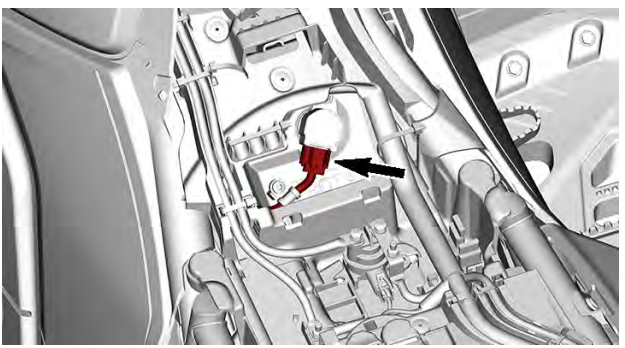

3. Pull out the ignition coil.

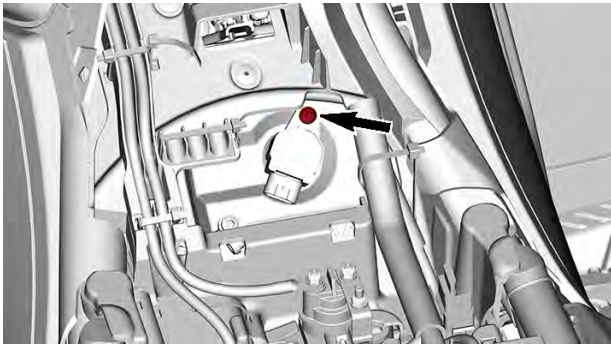

4. Unscrew the spark plug one turn.
5. Clean the spark plug hole and cylinder head with pressurized air if possible.
6. Unscrew the spark plug completely using a spark plug socket, then remove it.

Installing the Spark Plugs

1. Prior to installation make sure that the contact surface of cylinder head and spark plug is free of grime.
2. Using a feeler gauge, set the spark plug gap.

Spark Plug Gap
0.7 to 0.8 mm (.028 to .031 in)

3. Screw spark plug into cylinder head by hand and tighten with a torque wrench and a spark plug socket.

NOTICE

Do not overtighten spark plugs, engine damage can occur.

Tightening Torque	
Spark plug	11 Nm (97 lbf-in)

4. Reinstall the ignition coil.

Tightening Torque	
Ignition coil screw	9 ± 1 Nm (80 ± 9 lbf-in)

5. Install the ignition coil connector.
6. Install the seat.

CVT COVER

For a better understanding, some illustrations are taken with engine out of vehicle. To perform the following instructions, it is not necessary to remove engine.

⚠ WARNING

Never touch CVT while engine is running.
Never drive vehicle when CVT cover is removed.

⚠ CAUTION

Engine must be cool before cover is removed.

NOTICE

This CVT is lubrication free.
Never lubricate any components except drive pulley bearing and thrust rollers bearing.

Removing the CVT Cover

1. Remove the LH side panel.

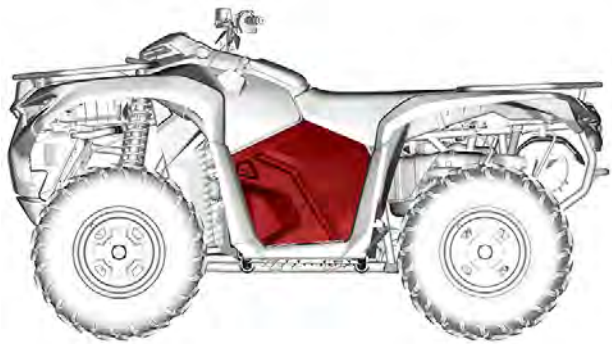

2. Remove the LH front inner fender.

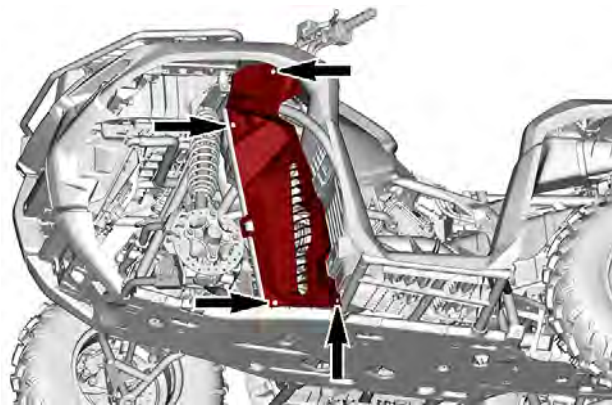

3. Remove the LH front footrest support.

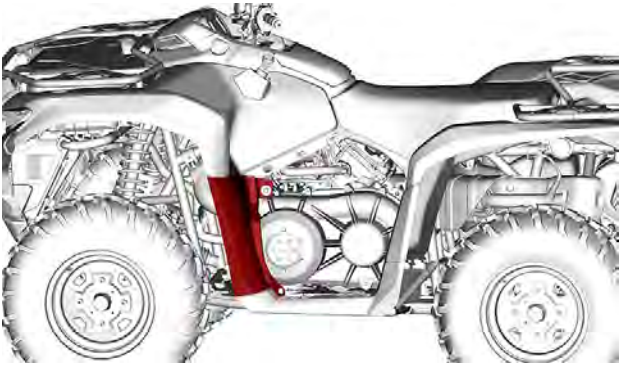

4. Disconnect the inlet air cooling duct from the CVT cover.
5. Remove all CVT cover screws.

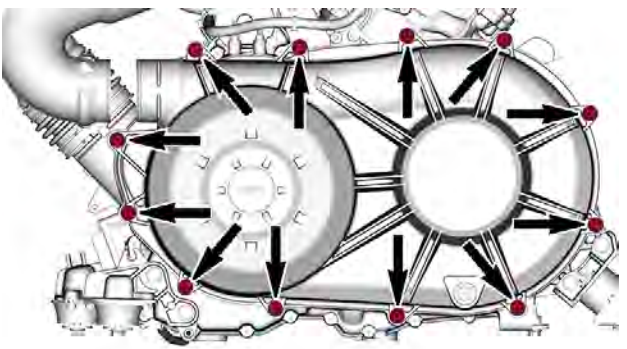

NOTE:Tip

Remove the center top screw last to support the cover during removal.

NOTICE
Do not use an impact tool to remove CVT cover screws.

6. Remove the CVT cover and its gasket.

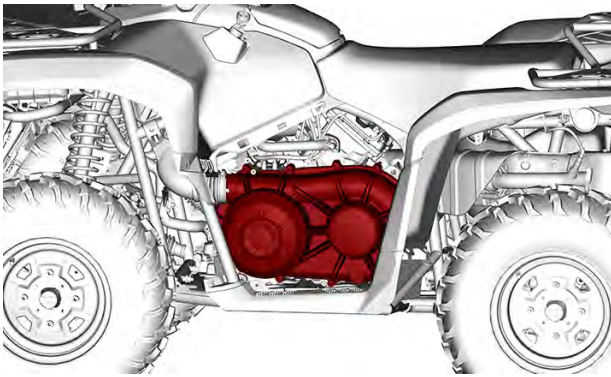

Installing the CVT Cover

1. Install the center top screw of first.
2. Tighten the CVT cover screws as per following sequence.

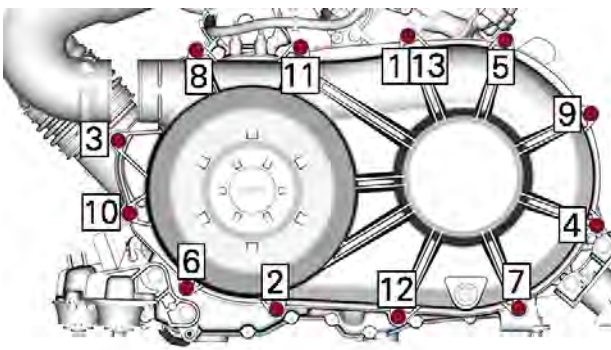

Tightening Torque	
CVT cover screws	7 ± 0.8 Nm (62 ± 7 lbf-in)

3. Reconnect the CVT cooling duct.
4. Reinstall the plastic panels.

DRIVE BELT

Removing the Drive Belt

NOTICE

In case of a drive belt failure, the CVT, cover and air outlet must be cleaned.

Please refer to *Tips for Maximizing Drive Belt Durability* in *Basic Procedures* for some important information.

1. Remove the CVT cover.
2. Install the puller/locking tool in the threaded hole of the driven pulley.

Puller/locking tool **(P/N 529036098)**	

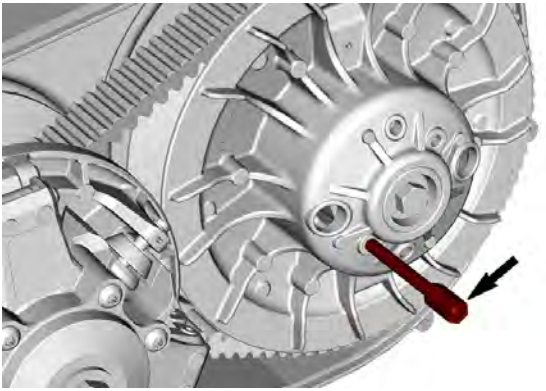

3. Tighten to open the pulley.
4. To remove belt, slip the belt over the top edge of fixed sheave.

Inspecting the Drive Belt

1. Inspect drive belt for cracks, fraying or abnormal wear. Replace if necessary.
2. Check drive belt width at cord level. Replace if the belt is out of the specification.

Drive Belt Width	
Service limit	30 mm (1.181 in)

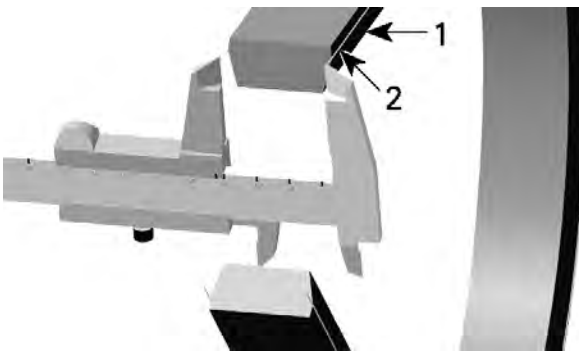

1. *Drive belt*
2. *Cord in drive belt*

Installing the Drive Belt

NOTICE

The maximum drive belt life span is obtained when the drive belt has the proper rotation direction.

1. To install the drive belt, slip the drive belt over the top edge of fixed sheave.
2. Install it so that the arrow printed on belt is pointing towards front of the vehicle, viewed from top.

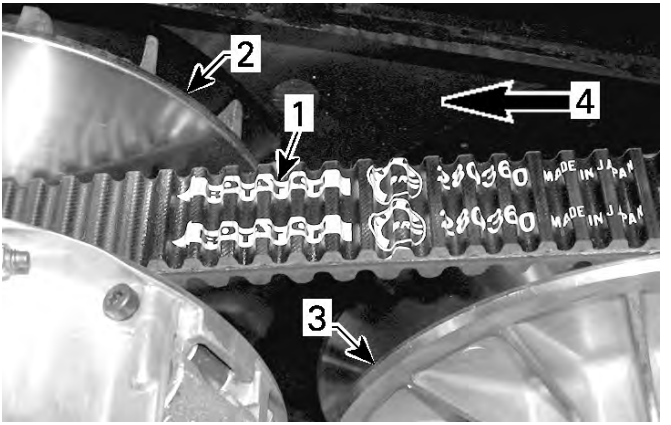

1. *Arrow printed on belt*
2. *Drive pulley (front)*
3. *Driven pulley (rear)*
4. *Rotation direction*

3. Unscrew and remove the puller/locking tool.

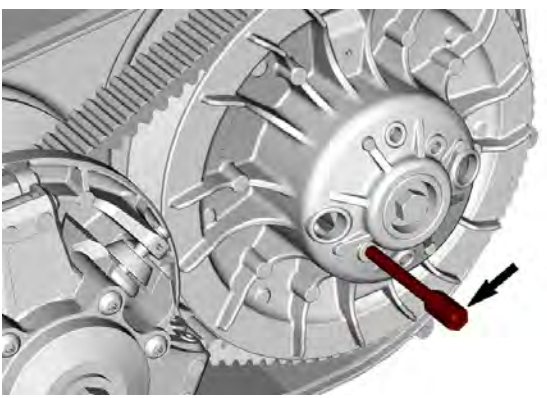

4. Turn the driven pulley until the lowest portion of the cogs on the external surface of the drive belt is even with the driven pulley edge.

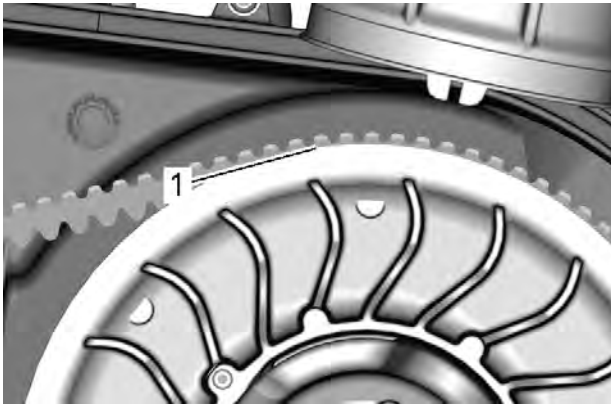

1. Lowest portion of cogs even with driven pulley edge

5. Install the CVT cover.

DRIVE AND DRIVEN PULLEYS

Inspecting the Drive Pulley

NOTICE

This inspection must be performed by an authorized Can-Am dealer, repair shop, or person of your own choosing for maintenance, repair, or replacement.

Inspect the bushings and rollers of the sliding sheave of the drive pulley, replace worn parts.

Inspecting the Driven Pulley

NOTICE

This inspection must be performed by an authorized Can-Am dealer, repair shop, or person of your own choosing for maintenance, repair, or replacement.

Inspect the bushings of the cam and of the sliding sheave of the driven pulley, replace worn parts.

Inspect the driven pulley rollers as required in the maintenance schedule and replace if required.

BATTERY

⚠ CAUTION

Never charge a battery while installed in vehicle.

These vehicles are equipped with a VRLA battery (Valve Regulated Lead Acid). It is a maintenance-free type battery, there is no need to add water to adjust electrolyte level.

NOTICE

Never remove the battery sealing cap.

Removing the Battery

1. Remove the plastic rivets securing the battery cover.

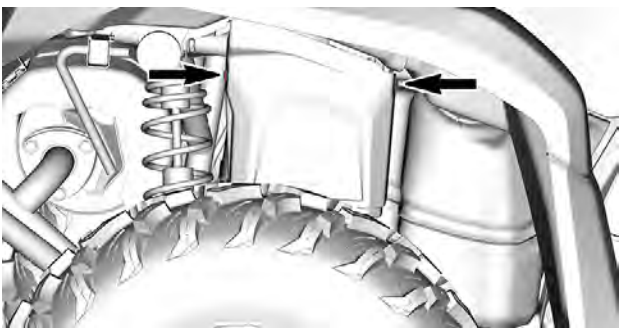

2. Remove the battery cover.
3. Disconnect BLACK (-) battery cable first, then the RED (+) battery cable.

NOTICE

Always respect this order for removal; disconnect BLACK (-) cable first.

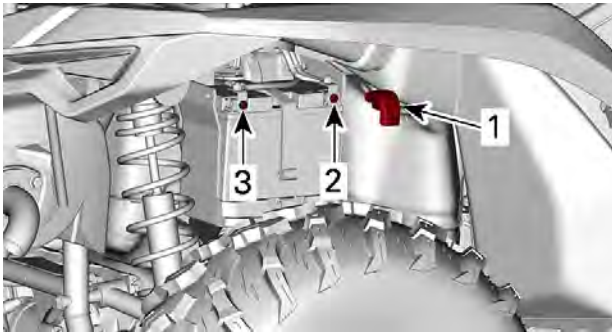

1. *RED (+) battery cable*
2. *Positive (+) terminal*
3. *Negative (-) terminal*
4. Remove battery holding strap then pull the battery out of frame.

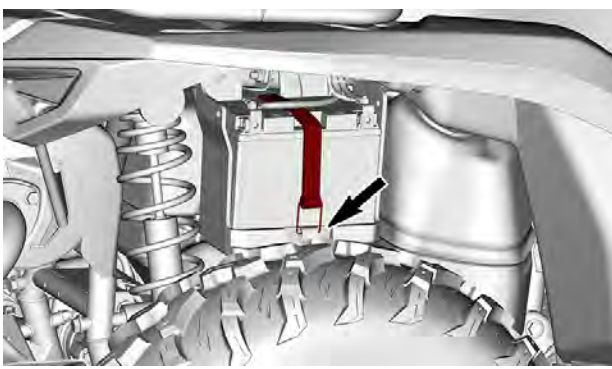

Cleaning the Battery

1. Clean battery, battery casing and battery posts using a solution of baking soda and water.
2. Remove corrosion from battery cable terminals and battery posts using a firm wire brush.

Installing the Battery

1. Insert the battery into its housing.

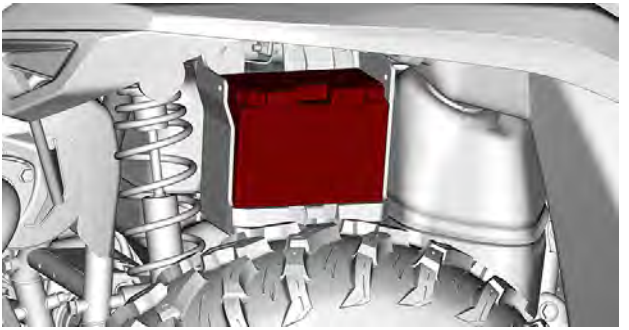

2. Secure the battery with the battery holding strap.

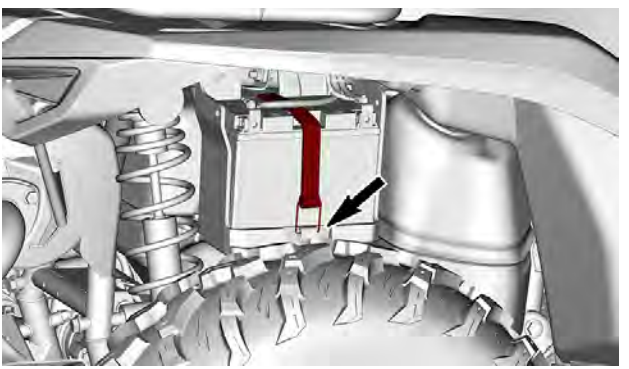

3. Connect the RED (+) battery cable first then the BLACK (-) battery cable.

NOTICE
Always connect RED (+) cable first then BLACK (-) cable.

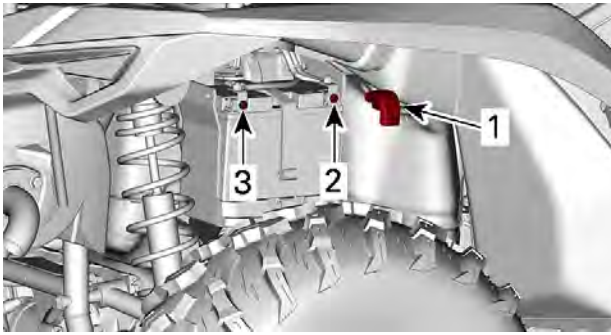

1. *RED (+) battery cable*
2. *Positive (+) terminal*
3. *Negative (-) terminal*
4. Tighten post screws to specification.

Tightening Torque	
Battery post screws	4.5 ± 0.5 Nm (40 ± 4 lbf-in)

5. Position the battery cover as shown.

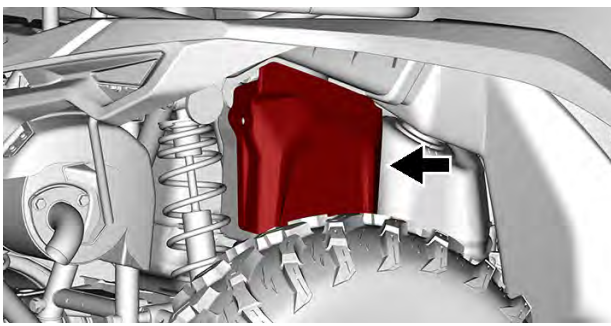

6. Secure battery cover with the previously removed plastic rivets.

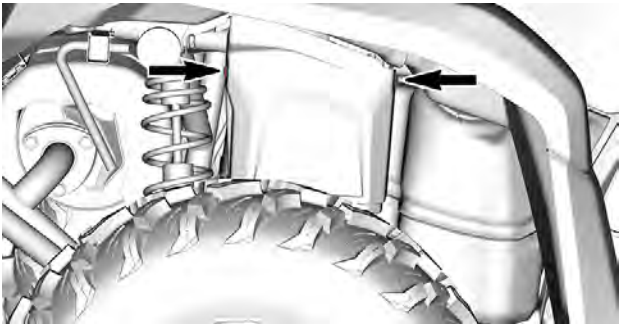

FUSES

Fuses Location

Main Fuse Box

The main fuse box is located under the console.

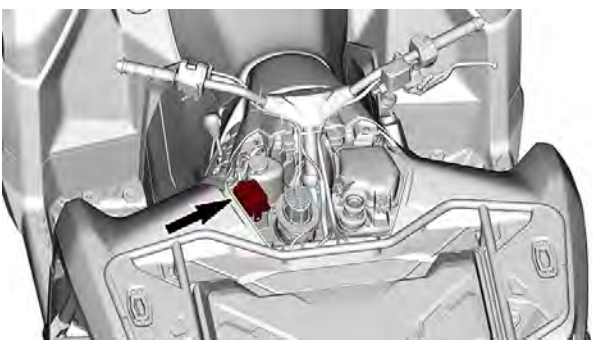

Auxiliary Fuse Holders

Other fuses are located under the seat.

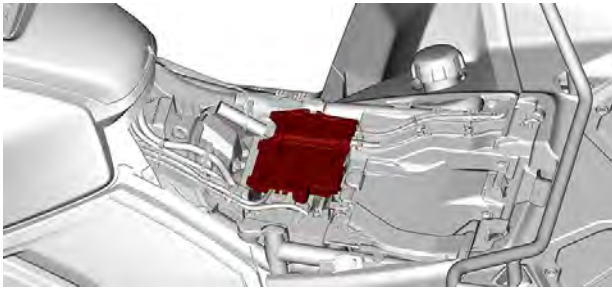

Description	Rating
Battery	40 A
DPS fuse	40 A
ABS pump	40 A
ABS valves	25 A
Accessories	15 A (MTC models)

Main Fuse Box Description

Models Equipped with an Electronic Throttle Control (ETC)		
No.	Description	Rating
RY1	Main relay	—
RY3	Cooling fan relay	—
RY4	Accessory relay	—
RY5	Headlamp relay	—
F1	Speed limiter ECM Start switch Gauge Ignition coil	15A

	Inter-connector	
F2	Accessories	15A
F3	Headlamp	7.5A
F4	Start switch Gauge	10A
F5	Fuel Pump	10A
F6	4WD actuator Oxygen sensor EVAP	10A
F7	DPS DLC Brake lights	15A
F10	Cooling fan (resettable)	15A

LIGHTS

Light Bulb Replacement

No bulb replacement is required for this vehicle.

It is equipped with LEDs (Light Emitting Diode) lights. This technology has proven itself to be very reliable.

In the unlikely event that one light does not work, have it checked by an authorized Can-Am dealer, repair shop or person of your own choosing.

Headlight Beam Aiming

1. Load the vehicle as per normal use.
2. Position vehicle on a level surface, 7.6 m (25 ft) in front of a test surface (wall or screen) as in first illustration.
3. Measure the distance from the center of each headlight to the ground (high beam and low beam).
4. Trace a line on the test surface parallel to the ground at each measured height (one for high beam and one for low beam).

   Low beam aiming is correct when the cutoff at the top of the beam is on the applicable horizontal center line on the test surface.

High beam aiming is correct when the center of the high beam (focus point) is 33 mm (1-5/16 in) **above** the applicable horizontal center line traced on the test surface as per specification.

NOTE:
The headlights can only be adjusted vertically.

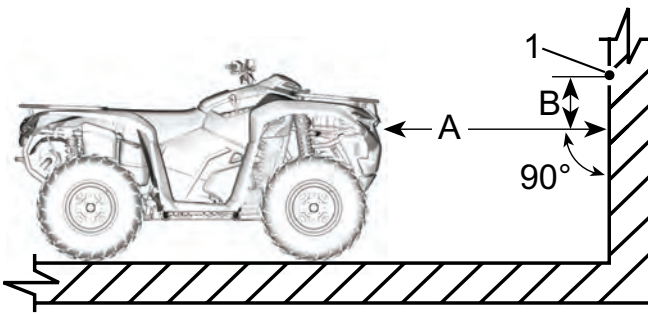

1. High beam focus point

A. Distance between headlamps and the test surface
B. Beam aiming specification

5. Adjust the HIGH beam aiming first.
6. Finish the adjustment with the LOW beam aiming.

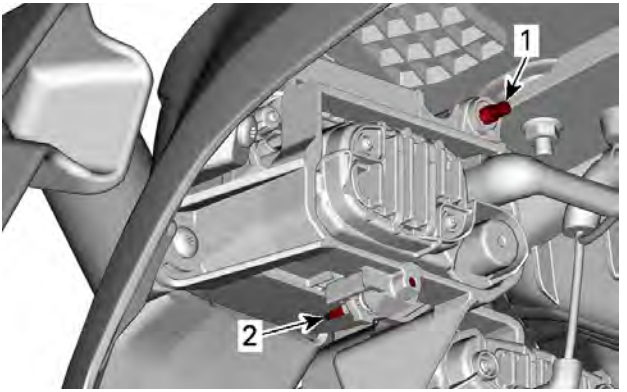

1. *High beam adjustment screw*
2. *Low beam adjustment screw*

DRIVE SHAFT BELLOW AND PROTECTOR

Inspecting the Drive Shaft Bellow and Protector

1. Visually inspect drive shaft protectors and bellows conditions.
2. Check protectors for damage or rubbing against shafts.
3. Check bellows for cracks, tears, leaking grease etc.
4. Repair or replace damaged parts as necessary.

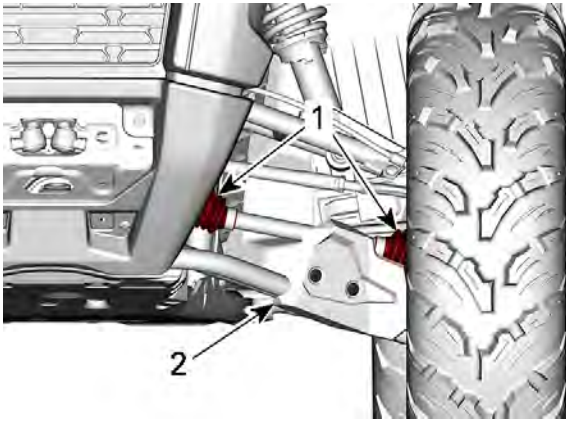

FRONT SUSPENSION

1. *Drive shaft bellows*
2. *Protector*

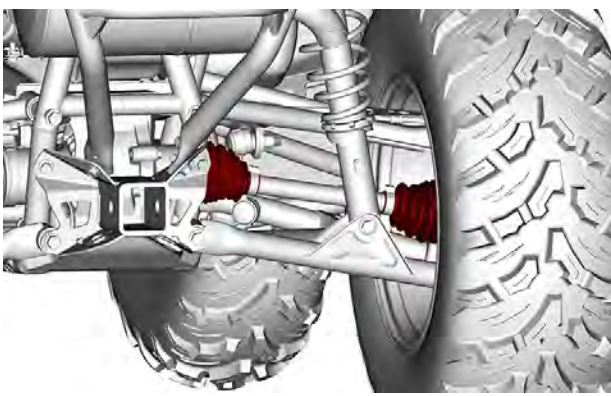

REAR SUSPENSION

WHEEL BEARING

Inspecting the Wheel Bearing

1. Place vehicle on a level surface.

2. Place the shifter on P position.
3. Apply the brake lock lever.
4. Lift and secure the vehicle on jack stands.
5. Grab the top and the bottom of the tire and push and pull the wheels to feel the play.
6. See an authorized Can-Am dealer if there is an abnormal play.

WHEELS AND TIRES

Verifying the Tire Pressure

⚠ WARNING

Tire pressure greatly affects vehicle handling and stability.
Insufficient pressure may cause tire to deflate and rotate on wheel.
Overpressure may burst the tire. Always follow recommended pressure.
NEVER set tire pressure below minimum. It could cause the tire to dislodge from the rim.

1. Check pressure when tires are **cold** before using the vehicle. Tire pressure changes with temperature and altitude. Recheck pressure if one of these conditions has changed.
2. Refer to the *Tire Pressure and Maximum Load* decal for proper tire pressure.

NOTE:
Although the tires are specifically designed for off-road use, a flat may still occur. Therefore, it is recommended to carry a tire gauge, tire pump and a repair kit.

Inspecting the Tire

1. Check tire for damage and wear. Replace if necessary.

⚠ WARNING

Do not rotate tires. The front and rear tires have a different size. The left and right tires have different unidirectional tread patterns.

Tire Replacement

Tire replacement should be performed by an authorized Can-Am dealer, a repair shop or a person of your choosing.

⚠ WARNING

Replace tires only with the same type and size as original tires. For unidirectional tread pattern, ensure that the tires are installed in the correct direction of rotation.
Tires should be replaced, by an experienced person, in accordance with tire industry standards and tools.

Removing the Wheel

1. Place vehicle on a level surface.
2. Place the shifter on P position.
3. Apply the brake lock lever.
4. Loosen the lug nuts.
5. Lift and secure the vehicle on jack stands.
6. Remove the lug nuts, then remove wheel.

Installing the Wheel

1. If tires are unidirectional, make sure to install wheel according to tire rotation.
2. Carefully tighten lug nuts in a criss-cross sequence then tighten to specification.

NOTICE

Always use the recommended wheel lug nuts for the type of wheel.
Using a different wheel lug nuts could cause damages to the rim or studs.

Tightening Torque	
Wheel lug nut	80 ± 5 Nm (59 ± 4 lbf-ft)

STEERING

Inspecting Tie-Rod Ends

1. Place vehicle on a level surface.
2. Place the shifter on P position.
3. Apply the brake lock lever.
4. Lift and secure the vehicle on jack stands.
5. Inspect tie-rod bellows for cracks.
6. Push and pull the wheels from the front or rear edge to feel the play.

7. See an authorized Can-Am dealer if there is an abnormal play or the bellow is cracked.

⚠ WARNING

The tie-rod end must be replaced if the bellow is cracked or shows an abnormal play.

SUSPENSION

Inspecting the Shock Absorbers

1. Inspect shock absorber for leaks, bump stop wear out or other damages.

Inspecting the Front Suspension Arms

1. Check suspension arms for cracks, bending or other signs of excessive wear or damage.

Inspecting the Rear Suspension Arms

1. Check suspension arms for cracks, bending or other damages.

BRAKES

Recommended Brake Fluid

Always use brake fluid meeting the specification DOT 4 only.

NOTICE

To avoid serious damage to the braking system, do not use fluids other than the recommended one, nor mix different fluids for topping up.
Do not use brake fluid taken from old or already opened containers.

Verifying the Front Brake Reservoir Level

1. Turn steering in the straight-ahead position to ensure reservoir is level.
2. Check the brake fluid level, the reservoir is full when the fluid reaches of the top of window.

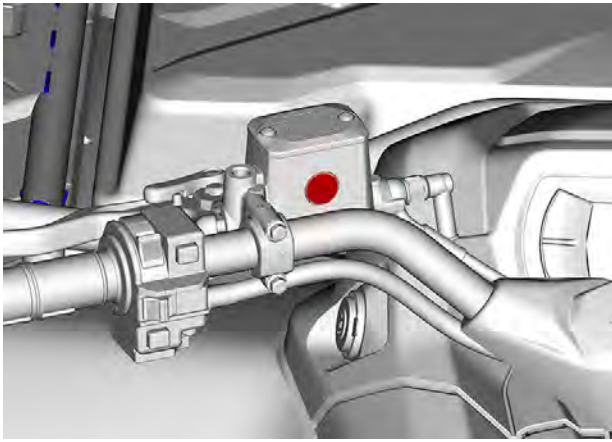

3. Visually inspect lever bellow condition.
4. Check for cracks, tears, etc. Replace if damaged.

Verifying the Rear Brake Reservoir Level (without ABS)

1. Remove the RH side panel.
2. With vehicle on a level surface, liquid should be between the UPPER and LOWER marks of brake pedal fluid reservoir.

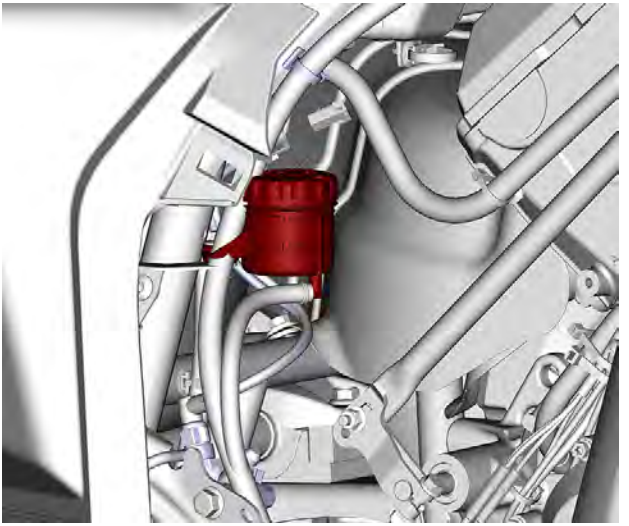

Verifying the Rear Brake Reservoir Level (with ABS)

1. Remove the console.
2. With vehicle on a level surface, liquid should be between the MIN and MAX marks of the fluid reservoir.

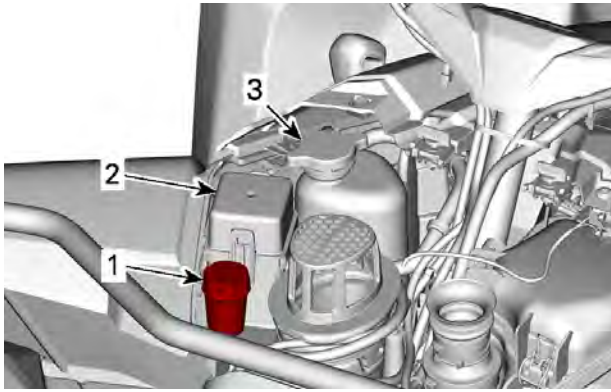

1. *Rear brake reservoir*
2. *Front fuse box*
3. *Coolant reservoir*

Adding Brake Fluid

1. Clean reservoir cap.

⚠ WARNING

Clean the reservoir cap before removing to avoid brake system contamination.

2. Remove the reservoir cap.
3. Add fluid as required using a clean funnel. **Do not overfill.**

NOTICE

Brake fluid can damage plastic and painted surface. Wipe off and clean any spillage.

4. Reinstall the reservoir cap.

NOTICE

Ensure filler cap diaphragm is pushed inside the cap before closing the brake fluid reservoir.

5. Tighten screws to specification.

Tightening Torque	
Front brake fluid reservoir screws	1.3 ± 0.1 Nm (12 ± 1 lbf-in)
Rear brake fluid reservoir screws	0.75 ± 0.25 Nm (7 ± 2 lbf-in)

Inspecting Brake System

The brake inspection, maintenance and repair should be performed by an authorized Can-Am dealer, a repair shop or person of your choosing.

However, verify the following between visits to your dealer:

– Brake fluid level
– Brake system for fluid leaks
– Brake pad wear
– Brake cleanliness

⚠ WARNING

The brake fluid replacement or brake system maintenance and repairs should be performed by an authorized Can-Am dealer.

Vehicle Cleaning and Protection

NOTICE

Never use a high pressure washer to clean the vehicle. USE LOW PRESSURE ONLY (like a garden hose).
High pressure can cause damage to electrical or mechanical components.

Pay attention to certain areas where salt-water, mud or debris can accumulate and potentially cause:

- Fire
- Wear
- Interference
- Corrosion.

This list includes but is not limited to:

- Around exhaust system and between muffler and muffler cover
- Under and around the fuel tank
- Radiator
- Shock absorbers
- Around front and rear differentials
- Around and underneath engine and gearbox
- Inside wheels
- On top of skid plates.

⚠ WARNING

Debris accumulation could lead to a vehicle fire when the exhaust system is hot and the debris are dried.
In some cases, that could result in serious properly damages, injuries or even death.
Clean often and regularly the area surrounding the exhaust system when riding in swamp, bog, hay or dead leaves.
In other situations, clean as per maintenance schedule requirement.

When vehicle is used in salt-water environment rinsing the vehicle with fresh water is necessary to preserve vehicle and its components after each operating day.

Metallic parts lubrication is highly recommended.

Use anti-corrosive lubricant or an equivalent.

XPS Lubricant and anti-corrosive

Painted parts which are damaged should be properly repainted to prevent rust.

When required, wash the body with warm water and soap (only use mild detergent). Apply non-abrasive wax.

NOTICE

Never clean plastic parts with strong detergent, degreasing agent, paint thinner, acetone, etc.

Protect the vehicle with a cover to prevent dust accumulation during storage.

NOTICE

The vehicle has to be stored in a cool and dry place and covered with an opaque tarpaulin. This will prevent sun rays and grime from affecting plastic components and vehicle finish.

Non Compatible Cleaning Products

Material Type	Non-compatible Cleaning Products
Polypropylene	– Any petroleum base cleaning products – XPS ATV finishing spray – XPS ATV cleaning kit (it contains the above XPS ATV Finishing Spray)

Compatible Cleaning Products

Material Type	Compatible Cleaning Product
Polypropylene	– XPS ATV wash – Soapy water

STORAGE AND PRESEASON PREPARATION

While reading this Operator's Guide, remember that:

⚠ WARNING
Indicates a potential hazard which, if not avoided, could result in serious injury or death.

Storage

When a vehicle is not in use for more than 4 months, proper storage is a necessity.

If the vehicle is to be remain inactive for more than 21 days, disconnect the BLACK (-) cable of the battery.

The use of a low amperage trickle charger is recommended to keep battery fully charged.

Before using your vehicle after storage, a preparation is required.

BRP recommends you have your authorized Can-Am dealer, repair shop, or person of your own choosing fully prepare your vehicle for storage. Or, at your convenience, you can follow the basic procedures below.

To Prepare the Vehicle for Storage

1. Inspect vehicle and have your authorized Can-Am dealer, repair shop, or person of you own choosing for maintenance, repair, or replacement if necessary.
2. Change the engine oil and filter.
3. Check engine coolant, differentials, gearbox and brake fluid levels.
4. Fill the fuel tank, add the fuel stabilizer and run the engine. Strictly follow instructions on fuel stabilizer container.
5. Inflate all tires to their recommended pressure.
6. Clean the vehicle.
7. Close and latch all storage compartments.
8. Store the vehicle in a dry area, away from sunlight, with a small amount of daily temperature variation.
9. In some locations, it will be a good idea to block the engine air intake and CVT entering and the muffler opening with clean rag to avoid intrusion of field mice, mice, squirrels or other small unwanted visitors. Don't push the rag to far. Leave a small portion of the rag overshot as a reminder.
10. Cover the vehicle with a permeable materials (e. g., tarpaulin). Avoid using plastic or similar non-breathing, coated materials that restrict air flow and allow heat and moisture to accumulate.
11. Slow charge the battery once a month at the recommended charging rate indicate on the battery. It is not necessary to remove the battery.

Preseason Preparation

After a storage period, the vehicle must be prepared and inspected before riding. Perform the following:

1. Uncover the vehicle.
2. Remove rags from the engine air intake and CVT entering and the muffler opening.
3. Clean the vehicle.
4. Charge the battery if needed.
5. Perform a pre-ride inspection, then test-ride the vehicle at low speed.

TECHNICAL INFORMATION

INTENDED USE

Agricultural tractor that can be used to carry materials.

Check the maximum allowable load of the vehicle indicated on the statutory plate and vehicle maximum load label, refer to *Important On-Product Labels*.

The Can-Am T Category tractor can tow a trailer on the road.

Check the maximum allowable load of the trailer.

Check the regulations for your area regarding the use of a tractor and trailer on the road.

Connect the trailer lights on the vehicle.

VEHICLE IDENTIFICATION

The main components of your vehicle (engine and frame) are identified using different serial numbers.

It may sometimes become necessary to locate these numbers for warranty purposes or to trace your vehicle in the event of loss.

These numbers are also required by the authorized Can-Am dealer to complete warranty claims properly.

We strongly recommend that you take note of all the serial numbers on your vehicle and supply them to your insurance company.

Vehicle Identification Number

The VIN is on the statutory plate located under the seat and on the VIN label.

Bombardier Recreational Products Inc.

1 → TXX
2 → eXXXXXXXXXXXXXXXXX
3 → XXXXXXXXXXXXXXXXX
4 → XXXX kg
5 → A-1: XXX kg
6 → A-2: XXX kg
7 → A-3: XXX kg

	T-1	T-2	T-3
B-1	XXX kg	XXX kg	XXX kg
B-2	XXX kg	XXX kg	XXX kg

STATUTORY PLATE

1: Category

2: Type-approval number

3: VIN

4: Permissible maximum laden mass(es) of the vehicle

5-7: Permissible maximum mass(es) per axle

B-1: Permissible towable mass on rear coupling point; unbraked trailer

B-2: Permissible towable mass on rear coupling point; inertia-braked trailer

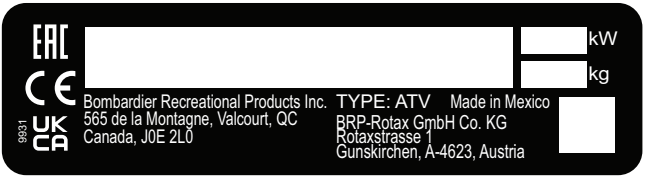
kW
kg
Bombardier Recreational Products Inc.
565 de la Montagne, Valcourt, QC
Canada, J0E 2L0
TYPE: ATV
Made in Mexico
BRP-Rotax GmbH Co. KG
Rotaxstrasse 1
Gunskirchen, A-4623, Austria
9931

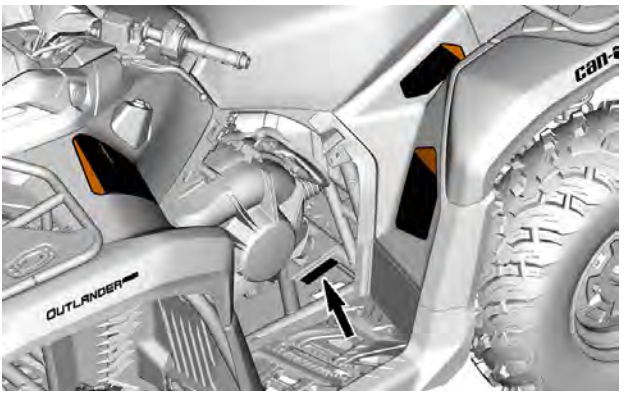
OUTLANDER

VIN LABEL

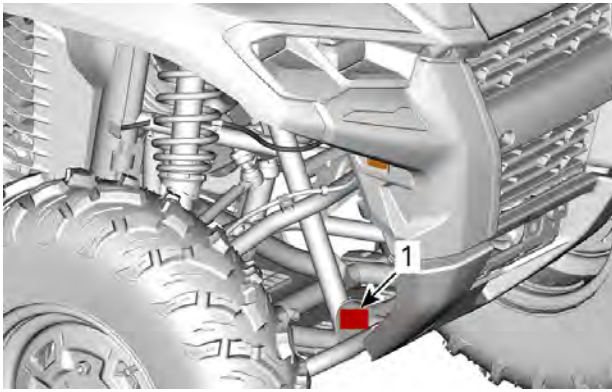

STAMPED VIN

1. Stamped VIN location

Engine Identification Number (EIN)

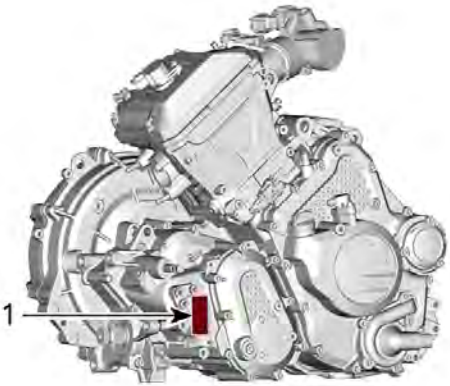

1. *EIN (Engine Identification Number)*

COMPLIANCE LABEL

Emission Control Information (Typical)

This label is located inside the glove box.

CARB Models	EPA Models

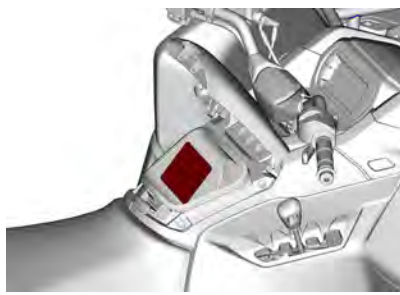

Regulation (EU) 2016/1628 applicable for Non-Road Mobile Machineries

Vehicles who comply to Regulation (EU) 2016/1628 (NRMM) are identified on the engine valve cover as well as on the frame under the seat.

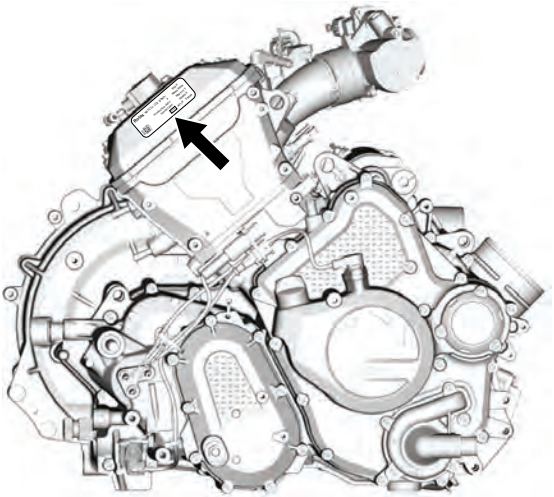

Rotax NRSC G1 CO2 g/kWh: XXXX
MXXXXXXX
Production date: MM-YYYY
Family type: XXXXXX
8639
e13 AT1/P V-####

TYPICAL - NRMM IDENTIFICATION LABEL

NOTE:
Tampering with the engine or its components voids the EU type-approval of that particular engine.

Trailer Hitch Compliance

E13

55R - 01 4835
D=4.23 kN S=83 kg
CLASS A50-X

9474

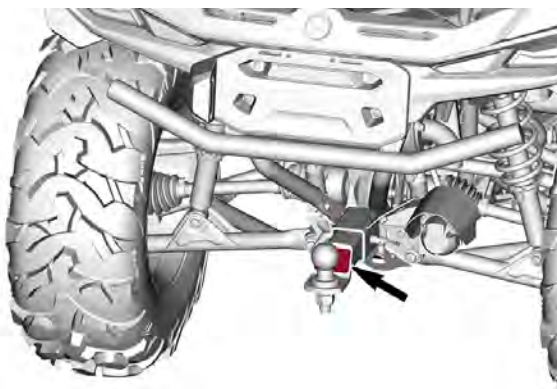

Category 1 Vehicle

CATEGORY 1	The cab does not offer any protection against substances which are harmful to health.

Category 1
EN 15695 - 1
704906301

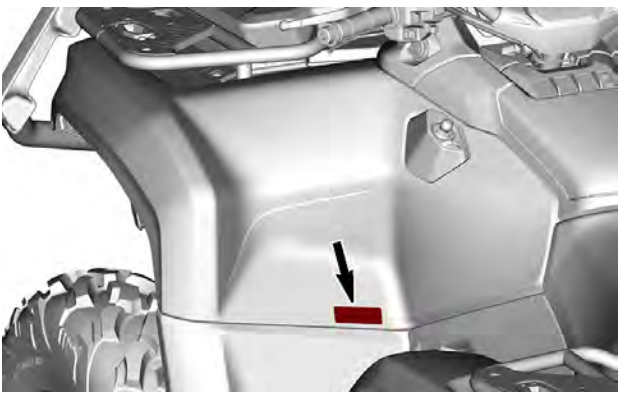

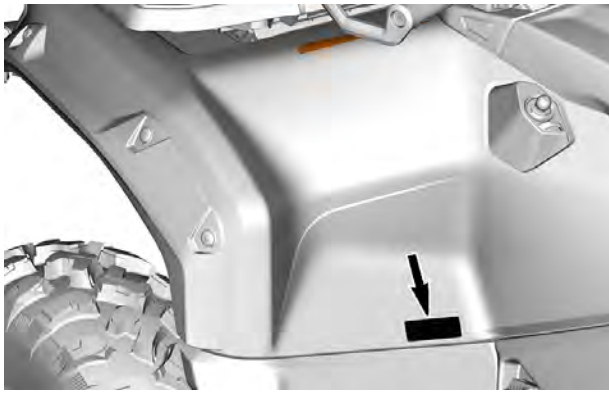

Ethanol Compliance Pictogram

This label is always located near the fuel cap.

TECHNICAL INFORMATION LABEL

Air Filter Maintenance Label

This label is located on the air box cover.

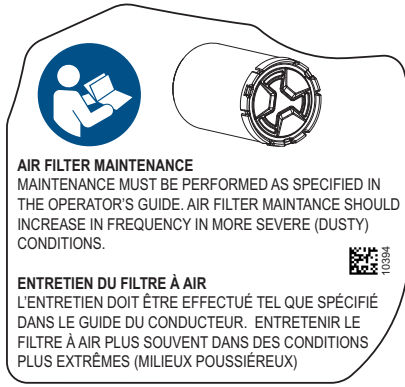

Park Position Pictogram

This pictogram is located just beside the shift pattern.

Brake Fluid Pictogram

This pictogram is located near all brake reservoirs.

BRP RF DESS POST GEN3 (CAN)

USA and Canada

This device complies with FCC Part 15 and Industry Canada license exempt RSS standard (s). Operation is subject to the following two conditions:

1. this device may not cause interference, and
2. this device must accept any interference, including interference that may cause undesired operation of the device.

This equipment has been tested and found to comply with the limits for a Class B digital device, pursuant to part 15 of the FCC Rules. These limits are designed to provide reasonable protection against harmful interference in a residential installation. This equipment generates, uses and can radiate radio frequency energy and, if not installed and used in accordance with the instructions, may cause harmful interference to radio communications. However, there is no guarantee that interference will not occur in a particular installation. If this equipment does cause harmful interference to radio or television reception, which can be determined by turning the equipment off and on, the user is encouraged to try to correct the interference by one or more of the following measures:

– Reorient or relocate the receiving antenna.
– Increase the separation between the equipment and receiver.
– Connect the equipment into an outlet on a circuit different from that to which the receiver is connected.
– Consult the dealer or an experienced radio/TV technician for help.

The device has been evaluated to meet general RF exposure requirement. The device can be used in portable exposure condition without restriction.

Le dispositif a été évalué à satisfaire l’exigence générale de l’exposition aux rf. L’appareil peut être utilisé dans des conditions d’exposition portatif sans restriction.

L’émetteur/récepteur exempt de licence contenu dans le présent appareil est conforme aux CNR d’Innovation, Sciences et Développement économique Canada applicables aux appareils radio exempts de licence.

1. l'appareil ne doit pas produire de brouillage, et
2. l'appareil doit accepter tout brouillage radioélectrique subi, même si le brouillage est susceptible d'en compromettre le fonctionnement.

Changes or modifications not expressly approved by the party responsible for compliance could void the user's authority to operate the equipment.

IC: 12006A-1001317030 For variant 1001316154 (CAN)

FCC ID: 2ACER 1001317030 For variant 1001316154 (CAN)

Mexico

IFETEL

Marca: BRP Megatech

Número: BRME1023-28186

BRP Megatech Certificate number: 1450978

Modelo: 1001316154

NOM-208-SCFI-2016 (Disposición Técnica IFT-008-2015)

La operación de este equipo está sujeta a las siguientes dos condiciones:

1. Es posible que este equipo o dispositivo no cause interferencia perjudicial y
2. Este equipo o dispositivo debe aceptar cualquier interferencia, incluyendo la que pueda causar su operación no deseada.

Brazil

Número: 05254-23-15603

BRP Megatech Certificate number: 1450991

Modelo: 1001316154

Este equipamento não tem direito à proteção contra interferência prejudicial e não pode causar interferência em sistemas devidamente autorizados. Para maiores informações, consulte o site da ANATEL.

Japan

This device is granted pursuant to the Japanese Radio Law (電波法) and the Japanese Telecommunications Business Law (電気通信事業法). This device should not be modified (otherwise the granted designation number will become invalid).

Europe

Declaration of Conformity

Simplified EU Declaration of Conformity according Radio Equipment Directive 2014/ 53/EU

DE

Hiermit erklärt BRP Megatech, dass der Funkanlagentyp 1001316154 der Richtlinie 2014/53/EU entspricht. Der vollständige Text der EU--Konformitätserklärung ist unter der folgenden Internetadresse verfügbar: https://www. brp. com/en/corporatesocialresponsibility/productsafety.html

FR

Le soussigné, BRP Megatech, déclare que l'équipement radioélectrique du type 1001316154 est conforme à la directive 2014/53/UE. Le texte complet de la déclaration UE de conformité est disponible à l'adresse internet suivante: https://www. brp. com/en/corporatesocialresponsibility/productsafety.html

BG

С настоящото BRP Megatech декларира, че този тип радиосъоръжение 1001316154 е в съответствие с Директива 2014/53/EC.

Цялостният текст на ЕС декларацията за съответствие може да се намери на следния интернет адрес: https://www.brp.com/en/corporatesocialresponsibility/productsafety.html

EL

Με την παρούσα ο/η BRP Megatech, δηλώνει ότι ο ραδιοεξοπλισμός 1001316154 πληροί την οδηγία 2014/53/ΕΕ. Το πλήρες κείμενο της δήλωσης συμμόρφωσης ΕΕ διατίθεται στην ακόλουθη ιστοσελίδα στο διαδίκτυο: https://www. brp. com/en/corporatesocialresponsibility/productsafety.html

CS

Tímto BRP Megatech prohlašuje, že typ rádiového zařízení 1001316154 je v souladu se směrnicí 2014/53/EU. Úplné znění EU prohlášení o shodě je k dispozici na této internetové adrese: https://www.brp.com/en/corporatesocialresponsibility/productsafety.html

DA

Hermed erklærer BRP Megatech, at radioudstyrstypen 1001316154 er i overensstemmelse med direktiv 2014/53/EU.

EU-overensstemmelseserklæringens fulde tekst kan findes på følgende internetadresse: https://www.brp.com/en/corporatesocialresponsibility/productsafety.html

ET

Käesolevaga deklareerib BRP Megatech, et käesolev raadioseadme tüüp 1001316154 vastab direktiivi 2014/53/EL nõuetele.

ELi vastavusdeklaratsiooni täielik tekst on kättesaadav järgmisel internetiaadressil: https://www. brp. com/en/corporatesocialresponsibility/productsafety.html

ES

Por la presente, BRP Megatech declara que el tipo de equipo radioeléctrico 1001316154 es conforme con la Directiva 2014/53/UE.

El texto completo de la declaración UE de conformidad está disponible en la dirección Internet siguiente: https://www.brp.com/en/corporatesocialresponsibility/productsafety.html

FI

BRP Megatech vakuuttaa, että radiolaitetyyppi 1001316154 on direktiivin 2014/53/EU mukainen. EU-vaatimustenmukaisuusvakuutuksen täysimittainen teksti on saatavilla seuraavassa internetosoitteessa: https://www. brp. com/en/corporatesocialresponsibility/productsafety.html

EN

Hereby, BRP Megatech declares that the radio equipment type 1001316154 is in compliance with Directive 2014/53/EU. The full text of the EU declaration of conformity is available at the following internet address: https://www. brp. com/en/corporatesocialresponsibility/product-safety.html

HR

BRP Megatech ovime izjavljuje da je radijska oprema tipa 1001316154 u skladu s Direktivom 2014/53/EU. Cjeloviti tekst EU izjave o sukladnosti dostupan je na sljedećoj internetskoj adresi:https://www.brp.com/en/corporate-social-responsibility/productsafety.html

HU

BRP Megatech igazolja, hogy a 1001316154 típusú rádióberendezés megfelel a 2014/53/EU irányelvnek. Az EU-megfelelőségi nyilatkozat teljes szövege elérhető a következő internetes címen:https://www.brp.com/en/corporate-socialresponsibility/productsafety.html

IT

Il fabbricante, BRP Megatech, dichiara che il tipo di apparecchiatura radio 1001316154 è conforme alla direttiva 2014/53/UE.

Il testo completo della dichiarazione di conformità UE è disponibile al seguente indirizzo Internet: https://www. brp. com/en/corporate-social-responsibility/productsafety.html

LT

Aš, BRP Megatech, patvirtinu, kad radijo įrenginių tipas 1001316154 atitinka Direktyvą 2014/53/ES. Visas ES atitikties deklaracijos tekstas prieinamas šiuo interneto adresu: https://www. brp. com/en/corporate--social-responsibility/productsafety.html

LV

Ar šo BRP Megatech deklarē, ka radioiekārta 1001316154 atbilst Direktīvai 2014/53/ES. Pilns ES atbilstības deklarācijas teksts ir pieejams šādā interneta vietnē: https://www. brp. com/en/corporate-social-responsibility/productsafety.html

MT

B'dan, BRP Megatech, niddikjara li dan it-tip ta' tagħmir tar-radju 1001316154 huwa konformi mad-Direttiva 2014/53/UE. It-test kollu tad-dikjarazzjoni ta' konformità tal-UE huwa disponibbli f'dan l-indirizz tal-Internet li ġej: https://www. brp. com/en/corporatesocialresponsibility/productsafety.html

NL

Hierbij verklaar ik, BRP Megatech, dat het type radioapparatuur 1001316154 conform is met Richtlijn 2014/53/EU.

De volledige tekst van de EU-conformiteitsverklaring kan worden geraadpleegd op het volgende internetadres: https://www. brp. com/en/corporatesocialresponsibility/productsafety.html

PL

BRP Megatech niniejszym oświadcza, że typ urządzenia radiowego 1001316154 jest zgodny z dyrektywą 2014/53/UE. Pełny tekst deklaracji zgodności UE jest dostępny pod następującym adresem internetowym: https://www. brp. com/en/corporatesocialresponsibility/productsafety.html

PT

O(a) abaixo assinado(a) BRP Megatech declara que o presente tipo de equipamento de rádio 1001316154 está em conformidade com a Diretiva 2014/53/UE.

O texto integral da declaração de conformidade está disponível no seguinte endereço de Internet: https://www.brp.com/en/corporatesocialresponsibility/productsafety.html

RO

Prin prezenta, BRP Megatech declară că tipul de echipamente radio 1001316154 este în conformitate cu Directiva 2014/53/UE. Textul integral al declaratiei UE de conformitate este disponibil la următoarea adresă internet: https://www.brp.com/en/corporatesocialresponsibility/productsafety.html

SV

Härmed försäkrar BRP Megatech att denna typ av radioutrustning 1001316154 överensstämmer med direktiv 2014/53/EU. Den fullständiga texten till EU-försäkran om överensstämmelse finns på följande webbadress: https://www. brp. com/en/corporatesocialresponsibility/productsafety.html

SL

BRP Megatech potrjuje, da je tip radijske opreme 1001316154 skladen z Direktivo 2014/53/EU. Celotno besedilo izjave EU o skladnosti je na voljo na naslednjem spletnem naslovu: https://www.brp.com/en/corporatesocialresponsibility/productsafety.html

SK

BRP Megatech týmto vyhlasuje, že rádiové zariadenie typu 1001316154 je v súlade so smernicou 2014/53/EÚ. Úplné EÚ vyhlásenie o zhode je k dispozícii na tejto internetovej adrese: https://www.brp.com/en/corporatesocialresponsibility/productsafety.html

IS

BRP Megatech lýsir því hér með yfir að þráðlausi fjarskiptabúnaðurinn 1001316154 er í samræmi við tilskipun 2014/53/ESB. Óstyttan texta ESB-samræmisyfirlýsingarinnar er að finna á veffanginu: https://www.brp.com/en/corporatesocialresponsibility/productsafety.html

Liechtenstein

Hiermit erklärt BRP Megatech, dass der Funkanlagentyp 1001316154 der Richtlinie 2014/53/EU entspricht. Der vollständige Text der EU--Konformitätserklärung ist unter der folgenden Internetadresse verfügbar: https://www. brp. com/en/corporatesocialresponsibility/productsafety.html

NO

Hermed erklærer BRP Megatech at radioutstyrstypen 1001316154 er i samsvar med direktiv 2014/53/EU. Hele teksten i EU-samsvarserklæringen finnes på følgende internettadresse: https://www. brp. com/en/corporatesocialresponsibility/productsafety.html

RU

Компания BRP Megatech настоящим заявляет, что радиотехническое оборудование категории 1001316154 отвечает требованиям Директивы 2014/53/EU.

Полный текст декларации соответствия ЕС доступен на сайте : https://www. brp. com/en/corporatesocialresponsibility/productsafety.html

NOISE EMISSION AND VIBRATION VALUES (ALL COUNTRIES EXCEPT CANADA/UNITED STATES)

NOISE EMISSION AND VIBRATION VALUES[1]			
MODEL		500/HD5	700/HD7
Noise	Sound pressure (L_{pA})	80 dB @ 3000 RPM (Uncertainty (K_{pA}) 3dB(A))	80 dB @ 3500 RPM (Uncertainty (K_{pA}) 3dB(A))
Vibration	Hand-arm system	<2.5 m/s² @ 3000 RPM	<2.5 m/s² @ 3500 RPM
	Whole body at seat	<0.5 m/s² @ 3000 RPM	<0.5 m/s² @ 3500 RPM
[1]: Noise emission and Vibration values are measured in accordance with Standard EN 15997:2011 on a paved surface with transmission in Neutral.			

BRP ADVENTURE BY DESIGN

565 de la Montagne Street
Valcourt (Quebec) J0E 2L0
Canada
www.brp.com

EU Declaration of Conformity

Authorized Representative: BRP-Rotax GmbH Co. KG, Rotaxstrasse 1, Gunskirchen, A- 4623, Austria

This declaration of conformity is issued under the sole responsibility of the manufacturer.

The undersigned, representing the manufacturer, hereby declares that model year **2025 All Terrain Vehicles** marked with the CE mark and a 17-character vehicle identification number structured as **3JBxxxxxxSxxxxxxx** under commercial names **Can-Am Outlander** and **Can-Am Renegade** comply with all the relevant provisions of the following Directives and Regulations:

Machinery (MD) Directive 2006/42/EC as amended up to and including Regulation(EU) 2019/1243	ISO 12100:2010
Non-Road Mobile Machinery (NRMM) Regulation (EU) 2016/1628 on gaseous pollutants as amended up to and including Regulation (EU) 2020/1040	Category ATS. Stage V emissions limits
Electromagnetic Compatibility (EMC) Directive 2014/30/EU as amended up to and including Regulation (EU) 2018/1139	CISPR 12:2007/A1:2009 & IEC 61000-6-1:2016 or UN R10.04 or later version
Battery Directive 2006/66/EC as amended up to and including Directive (EU) 2018/849 and. Regulation (EU) 1103/2010 on battery capacity labelling	EN 50342-7:2015
Radio Equipment (RED) Directive 2014/53/EU as amended up to and including Regulation(EU) 2018/1139 (If fitted with radio frequency (RF) D.E.S.S. key)	Art. 3.1a: IEC 62368-1:2014 Art. 3.1b: CISPR 25:2016 & ISO 11452-2:2004 Art. 3.2: ETSI EN 300 330 V2.1.1:2017

Renald Plante, Eng.
Director, Product Development, Can-Am
Bombardier Recreational Products Inc.

Valcourt, QC, Canada
Jan 19, 2024

SKI-DOO LYNX SEA-DOO EVINRUDE ROTAX CAN-AM

UK-DECLARATION OF CONFORMITY

BRP ADVENTURE BY DESIGN

565 de la Montagne Street
Vaudreuil (Québec) J7V 2L3
Canada

www.brp.com

UK Declaration of Conformity

Authorized Representative: BRP UK Ltd., (BWM Accountants Limited), Suite 5.1, 12 Tithebarn Street, Liverpool, L2 2DT

This declaration of conformity is issued under the sole responsibility of the manufacturer.

The undersigned, representing the manufacturer, hereby declares that model year **2025 All Terrain Vehicles** marked with the UK CA mark and a 17-character vehicle identification number structured as **3JBxxxxxxSxxxxxxx** under commercial names **Can-Am Outlander** and **Can-Am Renegade** comply with all the relevant provisions of the following Statutory Instruments:

Supply of Machinery (Safety) Regulations 2008, UK SI 2008/1597 as amended up to and including SI 2020/1112	ISO 12100:2010
Non-Road Mobile Machinery (Type-Approval and Emission of Gaseous and Particulate Pollutants) Regulations 2018, UK SI 2018/764 as amended up to and including SI 2020/1393	Category ATS, Stage V emissions limits
Electromagnetic Compatibility Regulations 2016, UK SI 2016/1091 as amended up to and including SI 2020/1112	CISPR 12:2007/A1:2009 & IEC 61000-6-1:2016 or UN R10.04 or later version
Batteries and Accumulators (Placing on the Market) Regulations 2008, UK SI 2008/2164 as amended up to and including UK SI 2020/904	EN 50342-7:2015
Radio Equipment Regulations 2017, UK SI 2017/1206 as amended up to and including SI 2020/1112 (if fitted with radio frequency (RF) D.E.S.S. key)	Art. 3.1a: IEC 62368-1:2014 Art. 3.1b: CISPR 25:2016 & ISO 11452-2:2004 Art. 3.2: ETSI EN 300 330 V2.1.1:2017

Renald Plante, Eng.
Director, Product Development, Can-Am ATV & Spyder
Bombardier Recreational Products Inc.

Valcourt, QC, Canada
Jan 19, 2024

Left blank for Eurasian Conformity mark where applicable

This page is intentionally blank

TECHNICAL SPECIFICATIONS

TECHNICAL SPECIFICATIONS – T CATEGORIES SERIES

Engine	
Engine type	ROTAX® Single–cylinder, 4-stroke, Double Over Head Camshaft (DOHC), liquid cooled
Number of cylinders	1
Number of valves	4 valves (mechanical adjustment)
Intake valve clearance	0.11 mm to 0.19 mm (.0043 in to .0074 in)
Exhaust valve clearance	0.31 mm to 0.39 mm (.0122 in to .0153 in)
Bore	97 mm (3.82 in)
Stroke	88 mm (3.46 in)
Displacement	650 cm^3 (39.7 in^3)
Exhaust system	Catalyst and Spark arrester
Air filter	Synthetic paper filter with foam

Cooling System		
Coolant	Recommended XPS coolant	Extended life pre-mixed coolant

Cooling System		
	If the XPS product is not available	Ethyl glycol / water mix (50%/50%). or coolant specifically designed for aluminum engines
	Capacity	3.2 l (0.85 gal (liq.,US))

Lubrication System			
Type			Wet sump
Oil filter			Replaceable cartridge oil filter (paper type)
Engine oil	Capacity		2.7 l (2.85 qt (liq.,US))
	Recommended XPS oil	General purpose	5W40 Synthetic blend oil
		Cold temperature	0W40 Synthetic oil
		Warm temperature	10W50 Synthetic oil

Lubrication System		
	If the XPS products are not available	Use a 4-stroke SAE engine synthetic or synthetic blend oil meeting or exceeding the following lubricant industry specifications. Always check the API service label certification on the oil container, it must contain at least one of the indicated standards. – **API service classification SN, or** – **JASO MA2**

Transmission	
Type	CVT (Continuously Variable Transmission)
Engagement	1950 ± 100 RPM

Gearbox		
Type		Dual range (HI-LO) with PARK, neutral and reverse
Gearbox oil	Capacity	0.5 l (0.53 qt (liq.,US))
	Recommended XPS gearbox oil	XPS 75W140 Synthetic gear oil
	If the XPS product is not available	75W 140 API GL-5 synthetic gear oil

Electrical System		
Magneto generator output		480 W @ 5000 RPM
Ignition system type		IDI (Inductive Discharge Ignition)
Engine RPM limiter setting	Forward	7500 RPM
	Reverse (without override)	15 km/h (9 MPH)
Spark plug	Quantity	1
	Make and type	NGK LMAR8AI-8
	Gap	0.7 to 0.8 mm (.028 to .031 in)
Battery	Type	Maintenance free —SLA (Sealed Lead Acid)
	Voltage	12 volts
	Nominal rating	18 A•h
	Power starter output	1 kW
Headlight		LEDs
Taillight		LEDs
Turn signal lights		LEDs
Position light		LEDs
Licence plate light		LEDs
Fuses		Refer to *Fuses* in the *Maintenance* section

Fuel System		
Fuel delivery		Electronic fuel injection (EFI) with iTC
Throttle body		46 mm with ETA
Fuel pump		Electric (in fuel tank)
Idle speed		1300 ± 100 RPM
Fuel	Type	Regular unleaded gasoline
	Minimum Octane rating	91 RON
Fuel tank capacity		± 19.5 l (5.1 gal (liq.,US))
Fuel remaining when low fuel light turns ON		± 5 l (1.3 gal (liq.,US))

Drive System		
Drive system type	PRO XU PRO MAX XU	Selectable 2WD/4WD and 4WD Lock
	All other models	Selectable 2WD/4WD
Front differential oil	Capacity	350 ml (11.8 fl oz (US))
	Recommended XPS differential oil	XPS 75W90 Synthetic gear oil
	If the XPS product is not available	Synthetic gear oil 75W90 API GL-5
Front drive	PRO XU PRO MAX XU	Visco-4Lok auto-locking and full lock front differential
	All other models	Visco-Lok auto-locking front

Drive System		
		differential, spiral gears
Front drive ratio		3.6:1
Rear drive		Spiral bevel gear / Final drive
Rear final drive oil	Capacity	260 ml (8.8 fl oz (US))
	Recommended XPS oil	XPS 75W90 Synthetic gear oil
	If the XPS product is not available	Synthetic gear oil 75W90 API GL-5
Rear drive ratio		3.6:1
CV joint grease		XPS CV joint grease
Spline's propeller shaft grease (grease applied to spline connections)		XPS Propeller shaft grease or equivalent

Front Suspension		
Suspension type		Double arched suspension-arm with dive-control geometry
Suspension travel		24.8 cm (9.75 in)
Shock absorber	Quantity	2
	Type	Twin tube
Preload adjustment		5 positions cam

Rear Suspension		
Suspension type		Double suspension-arm with dive-control geometry
Suspension travel		26 cm (10.25 in)
Shock absorber	Quantity	2
	Type	Twin tube
Preload adjustment		5 positions cam

Brakes		
Type	DPS PRO XU HD7 (ABS) MAX DPS MAX XT	Hydraulic disc brakes with ABS
	PRO PRO XU (no ABS) PRO MAX XU	Hydraulic disc brakes
Front brake	Qty	2
	Type	Dual 214 mm (8.4 in) brake disc with hydraulic twin-pistons calipers
Rear brake	Qty	1
	Type	Single 214 mm (8.4 in) brake disc with hydraulic twin-pistons calipers

Brakes		
Brake fluid	Type	DOT 4
	Capacity	Approximately 260 ml (8.8 fl oz (US))
Caliper		Floating
Brake pad material		Metallic
Minimum brake pad thickness		0.5 mm (.02 in)
Minimum brake disc thickness		4 mm (.157 in)
Maximum brake disc warpage		0.2 mm (.01 in)

Tires			
Pressure			Recommended tire inflation pressure is found on the Tire Label. Refer to appropriate *Important On-Product Labels* section for its location.
Tire size	Front	DPS MAX DPS	205/80R12 (25x8R12)
		PRO Base	205/85R12 (26x8–12)
		PRO XU PRO MAX XU	205/85R12 (26x8R12)
		MAX XT	205/75R14 (26x8R14)

Tires			
	Rear	DPS MAX DPS	255/65R12 (25x10R12)
		PRO Base	255/70R12 (26x10–12)
		PRO XU PRO MAX XU	255/70R12 (26x10R12)
		MAX XT	255/60R14 (26x10R14)
Minimum tire thread depth			3 mm (.118 in)

Wheels			
Type		PRO Base	Steel
		All other models	Cast aluminum
Rim size	Front	MAX XT	35.6 x 16.5 cm (14 x 6.5 in)
		All other models	30.5 x 15.2 cm (12 x 6 in)
	Rear	MAX XT	35.6 x 21.6 cm (14 x 8.5 in)
		All other models	30.5 x 19.1 cm (12 x 7.5 in)
Wheel lug nuts torque			80 ± 5 Nm (59 ± 4 lbf-ft)
Wheel Offset	Front		41.2 mm (1.6 in)
	Rear		51 mm (2 in)

Chassis	
Frame	Tubular high strength steel

Dimensions		
Overall length	XT PRO PRO XU	228.4 cm (89.9 in)
	DPS MAX DPS	220.2 cm (86.7 in)
	MAX XT	239.2 cm (94.2 in)
Overall width	XT PRO	123.9 cm (48.8 in)
	DPS MAX DPS	120.9 cm (47.6 in)
	MAX XT	120.9 cm (47.6 in)
Overall height	XT PRO	145.6 cm (57.4 in)
	DPS MAX DPS	144.6 cm (56.9 in)
	MAX XT	145.6 cm (57.4 in)
Wheelbase	All MAX	154.2 cm (60.7 in)
	All 1-UP models	134 cm (52.7 in)
Track width	Front	987 cm (38.9 in)
	Rear	955cm (37.6 in)

Dimensions		
Ground clearance	All PRO	33 cm (13 in)
	DPS MAX DPS	30.5 cm (12 in)
	MAX XT	31.8 cm (12.5 in)

WEIGHT AND LOADING CAPACITY		
Dry weight	DPS	348.2 kg (767.6 lb)
	PRO	370 kg (816 lb)
	PRO XU (no ABS)	377 kg (831 lb)
	PRO XU (ABS)	381 kg (840 lb)
	MAX DPS	364 kg (802.6 lb)
	MAX XT	421 kg (928 lb)
	PRO MAX XU	426 kg (939 lb)
Front rack capacity		54.4 kg (120 lb)
Front storage compartment loading capacity		34 l (9 gal (liq.,US))
Rear rack capacity		109 kg (240 lb)
Total vehicle load allowed (including driver, passenger, all other loads and added accessories)	1-UP	234 kg (517 lb)
	2-UP	272 kg (600 lb)
Towing capacity (unbraked)		394 kg (870 lb)

WEIGHT AND LOADING CAPACITY	
Towing capacity (braked)	830 kg (1830 lb)
Tongue capacity	83 kg (183 lb)

This page is intentionally blank

PARTS CATALOG

ONLINE PARTS CATALOG

The parts catalog required for your Can-Am ATV is available on our website at:

www.epc.brp.com

TROUBLESHOOT-ING

Abnormal Metal-on-Metal Sound

1. Abnormal Metal-on-Metal Sound During Hard Usage

Abnormal metal-on-metal sound under the seat during hard acceleration (hard usage) could occur when the engine is overworked.

There is a metal prong attached to the engine that will come into contact with the frame, this is a tell-tale that the engine is being overexerted and to prevent engine mounts from breaking.

– *Release the throttle.*
– *Make sure the shifter is on the L position.*
– *Check the respected of the maximum authorized vehicle load.*
– *Apply the throttle smoothly.*

2. Abnormal Metal-on-Metal Sound During Normal Use

– *See an authorized Can-Am dealer to verify the condition if the engine mounts.*

Engine Does Not Turn

1. Engine stop switch.

– *Make sure that engine stop switch is in ON position.*

2. Ignition switch (if equipped).

– *Turn ignition key in ON (Start) position.*

3. D.E.S.S. key is not installed on D.E.S.S. post (if equipped).

– *Securely install D.E.S.S. key to D.E.S.S. post.*

4. The digital display shows BAD KEY (D.E.S.S. equipped models).

– *Wrong D.E.S.S. key, use the proper key for this vehicle.*

5. Transmission is not set on PARK or NEUTRAL.

– *Set transmission either in PARK or in NEUTRAL or press the brake lever.*
– *Press the brake lever*

6. Burnt fuse.

– *Check main fuse condition.*

7. Weak battery or loose connections.

– *Check charging system.*
– *Check connections and terminals condition.*
– *Have the battery checked.*
– *Contact an authorized Can-Am dealer.*

8. Weak starter or loose connections.

– *Check starter connections.*
– *Check starter relay.*

Engine Turns Over But Fails To Start

1. Flooded engine (spark plug wet when removed).

– *Refer to Flooded Engine in Special Procedures.*

2. No fuel to the engine (spark plug dry when removed).

– *Check fuel tank level.*
– *Check fuel pump fuse and relay.*
– *A failure of the fuel pump may have occurred.*
– *If engine does not start, seek service from an authorized Can-Am dealer, repair shop, or person of your own choosing for maintenance, repair, or replacement.*

3. Spark plug/ignition (no spark).

– *Check injectors/ignition fuse condition.*
– *Remove spark plug then reconnect to ignition coil.*
– *Start engine with spark plug grounded to the engine away from spark plug hole. If no spark appears, replace spark plug.*
– *If trouble persists, seek service from an authorized Can-Am dealer, repair shop or person of your own choosing for maintenance, repair or replacement*

4. CHECK ENGINE indicator lamp is on and the digital display shows CHECK ENGINE.

– *Seek service from an authorized Can-Am dealer, repair shop or person of your own choosing for maintenance, repair or replacement.*

5. Engine is under a protection mode (limp home).

– *The CHECK ENGINE indicator lamp is on and the digital display shows CHECK ENGINE, seek service from an authorized Can-Am dealer, repair shop or person of your own choosing for maintenance, repair or replacement.*

Engine Lacks Acceleration or Power

1. Fouled or defective spark plug.

– *Refer to Engine Turns Over But Fails To Start.*

2. Lack of fuel to engine.

– *Refer to Engine Turns Over But Fails To Start.*

3. Engine is overheating. (CHECK ENGINE indicator light will turn on and HI TEMP will appear in the digital display.)

– *Refer to Engine Overheats.*

4. Air filter/housing clogged or dirty.

– *Check air filter and clean if necessary.*
– *Check deposits in air filter housing drain.*
– *Check the position of the air intake tube.*

5. CVT dirty or worn-out.

– *Contact an authorized Can-Am dealer.*

6. Engine is under a protection (limp home) mode.

– *Check digital display for messages.*
– *The CHECK ENGINE indicator lamp is on and the digital display shows CHECK ENGINE or LIMP HOME, seek service from an authorized Can-Am dealer, repair shop or person of your own choosing for maintenance, repair or replacement.*

Engine Overheats

1. Low coolant in cooling system.

– *Check engine coolant, refer to Verifying the Engine Coolant in Maintenance Procedures.*

2. Dirty radiator fins.

– *Clean radiator fins, refer to Inspecting the Radiator in Maintenance Procedures.*

3. Cooling fan inoperative.

– *Check cooling fan fuse or relay, refer to Fuses in Maintenance Procedures. If the fuse is good, seek service from an authorized Can--Am dealer, repair shop or person of your own choosing for maintenance, repair or replacement.*

Engine Backfire

1. Exhaust system leakage.

– *Seek service from an authorized Can-Am dealer, repair shop or person of your own choosing for maintenance, repair or replacement.*

2. Engine is running too hot.

– *Refer to Engine Lacks Acceleration Or Power.*

3. Ignition timing is incorrect or there is an ignition system failure.

– *Seek service from an authorized Can-Am dealer, repair shop or person of your own choosing for maintenance, repair or replacement.*

Engine Misfire

1. Fouled/defective/worn spark plug.

– *Clean/verify spark plug and heat range. Replace as required.*

2. Water in fuel.

– *Drain fuel system and refill with fresh fuel.*

Vehicle Cannot Reach Full Speed

1. Engine problems.

– *Refer to Engine Lacks Acceleration Or Power.*

2. Brake lock lever engaged.

– *Ensure the brake lock lever is completely disengaged.*

3. Air filter/housing plugged or dirty.

– *Check air filter and clean if necessary.*
– *Check deposits in air filter housing drain.*
– *Check the position of the air intake tube.*

4. CVT dirty or worn-out.

– *Contact an authorized Can-Am dealer.*

5. Engine is under a protection mode (limp home).

– *Check digital display for messages.*
– *The CHECK ENGINE indicator lamp is on and the digital display shows CHECK ENGINE or LIMP HOME, seek service from an authorized Can-Am dealer, repair shop or person of your own choosing for maintenance, repair or replacement.*

Shift Lever Is Hard To Move

1. Transmission gears are in a position that prevents the shift lever to work.

– *Rock the vehicle back and forth to move the gears in the transmission and allow the shift lever to be set.*

2. CVT dirty or worn-out.

– *Contact an authorized Can-Am dealer.*

The RPM Increases But The Vehicle Does Not Move

1. The transmission is on PARK or NEUTRAL position.

– *Select the R, HI or LO position.*

2. CVT dirty or worn-out.

– *Contact an authorized Can-Am dealer.*

3. Water in the CVT housing.

– *Contact an authorized Can-Am dealer.*

Reduced Power Steering Assist

1. **When DPS is subjected to sustained severe steering conditions, the assistance provided by the DPS motor may be reduced to protect the system.**

– *Once the load is reduced, the normal steering assistance will return.*

2. **The CHECK ENGINE indicator lamp is ON and the digital display shows CHECK DPS**

– *Seek service from an authorized Can-Am dealer, repair shop or person of your own choosing for maintenance, repair or replacement.*

This page is intentionally blank

WARRANTY

BRP LIMITED WARRANTY USA AND CANADA: 2025 CAN-AM® ATV

1) SCOPE OF THE LIMITED WARRANTY

Bombardier Recreational Products Inc. ("**BRP**") warrants its 2025 Can-Am ATV (the "**Product**") sold by authorized BRP dealers in the United States of America ("USA") and in Canada (a "**BRP Dealer**") from defects in material or workmanship for the period and under the conditions described below.

This limited warranty will become null and void if:

1. the Product was used for racing or any other competitive activity, at any point, even by a previous owner; or
2. the Product has been altered or modified in such a way so as to adversely affect its operation, performance or durability, or has been altered or modified to change its intended use.

Non-factory installed parts and accessories are not covered under this limited warranty. Please refer to the applicable parts and accessories limited warranty text.

2) LIMITATIONS OF LIABILITY

TO THE EXTEND PERMITTED BY LAW, THIS WARRANTY IS EXPRESSLY GIVEN AND ACCEPTED IN LIEU OF ANY AND ALL OTHER WARRANTIES, EXPRESSED OR IMPLIED, INCLUDING WITHOUT LIMITATION ANY WARRANTY OF MERCHANTABILITY OR FITNESS FOR A PARTICULAR PURPOSE. TO THE EXTENT THAT THEY CANNOT BE DISCLAIMED, THE IMPLIED WARRANTIES ARE LIMITED IN DURATION TO THE LIFE OF THE EXPRESS WARRANTY. INCIDENTAL AND CONSEQUENTIAL DAMAGES ARE EXCLUDED FROM COVERAGE UNDER THIS WARRANTY. SOME STATES/PROVINCES DO NOT ALLOW FOR THE DISCLAIMERS, LIMITATIONS AND EXCLUSIONS IDENTIFIED ABOVE. AS A RESULT, THEY MAY NOT APPLY TO YOU. THIS WARRANTY GIVES YOU SPECIFIC RIGHTS, AND YOU MAY ALSO HAVE OTHER LEGAL RIGHTS WHICH MAY VARY FROM STATE TO STATE, OR PROVINCE TO PROVINCE.

Neither the distributor, any BRP Dealer nor any other person has been authorized to make any affirmation, representation or warranty regarding the Product, other than those contained in this limited warranty, and if made, shall not be enforceable against BRP.

BRP reserves the right to modify this limited warranty at any time, being understood that such modification will not alter the warranty conditions applicable to the Products sold while this warranty is in effect.

3) EXCLUSIONS–ARE NOT WARRANTED

The following are not warranted under any circumstances:

- Normal wear and tear;
- Routine maintenance items, tune ups, adjustments;
- Damage caused by negligence or failure to provide proper maintenance and/or storage, as described in the Operator's Guide;
- Damage resulting from removal of parts, improper repairs, service, maintenance, modifications or use of parts not manufactured or approved by BRP or resulting from repairs done by a person that is not an authorized servicing BRP Dealer;
- Damage caused by abuse, abnormal use, neglect or operation of the Product in a manner inconsistent with the recommended operation described in the Product's Operator's Guide;
- Damage resulting from accident, submersion, fire, theft, vandalism or any act of God;
- Operation with fuels, oils or lubricants which are not suitable for use with the Product (see the Operator's Guide);
- Damages from rust, corrosion or exposure to the elements;
- Damage resulting from water or snow ingestion;
- Incidental or consequential damages, or damages of any kind including without limitation transportation expenses, towing, storage, telephone, rental, taxi, inconvenience, insurance coverage, loan payments, loss of time, loss of income or time missed for downtime experience due to service work.

4) WARRANTY COVERAGE PERIOD

This limited warranty will be in effect from (1) the date of delivery to the first retail consumer, or (2) the date the Product is first put into use, whichever occurs first and for the applicable period below:

- SIX (6) consecutive months, for private use or commercial use owners
- **For emission-related components**, please also refer to the *US EPA Emission– Related Warranty*.
- **For evaporative emission-related components of California models equipped with evaporative emission control system produced by BRP for sale in the State of California** that are originally sold to a resident or subsequently warranty registered to a resident in the State of California, also refer to the *California Evaporative Emissions Control Warranty Statement*.

The repair or replacement of parts or the performance of service under this warranty does not extend the life of this limited warranty beyond its original expiration date.

5) CONDITIONS TO HAVE WARRANTY COVERAGE

This warranty coverage is available only if each of the following conditions has been fulfilled:

- The Product must be purchased as new and unused by its first owner from a BRP Dealer authorized to sell the Products in the country in which the sale occurred;
- The BRP specified pre-delivery inspection process must be completed, documented and signed by the purchaser;
- The Product must have undergone proper registration by an authorized BRP Dealer;
- The Product must be purchased in the country in which the purchaser resides;
- Routine maintenance outlined in the Operator's Guide must be timely performed in order to maintain warranty coverage. BRP reserves the right to make warranty coverage contingent upon proof of proper maintenance.

BRP will not honor this limited warranty to any private use owner or commercial use owner if one of the preceding conditions has not been met. Such limitations are necessary in order to allow BRP to preserve both the safety of its products, and also that of its consumers and the general public.

6) WHAT TO DO TO OBTAIN WARRANTY COVERAGE

The customer must cease using the Product upon the appearance of an anomaly, notify a servicing BRP Dealer within three (3) days of the appearance of the anomaly and provide the BRP Dealer with reasonable access to the Product and reasonable opportunity to repair it.

The customer must also present to the BRP Dealer, proof of purchase of the Product and must sign the repair/work order prior to starting the repair in order to validate the warranty repair.

All parts replaced under this limited warranty become the property of BRP.

7) WHAT BRP WILL DO

BRP's obligations under this warranty are limited to, at its sole discretion, repairing or replacing parts found defective under normal use, maintenance and service without charge for parts and labor, at any authorized BRP Dealer during the warranty coverage period under the conditions described herein. No claim of breach of warranty shall be cause for cancellation or rescission of the sale of the Product to the owner.

In the event that service is required outside of the country of original sale, the owner will bear responsibility for any additional charges due to local practices and conditions, such as, but not limited to, freight, insurance, taxes, license fees, import duties, and any and all other

financial charges, including those levied by governments, states, territories and their respective agencies.

BRP reserves the right to improve or modify products from time to time without assuming any obligation to modify products previously manufactured.

8) TRANSFER

If the ownership of a Product is transferred during the warranty coverage period, this limited warranty, subject to its terms and conditions, shall also be transferred and be valid for the remaining coverage period provided BRP or an authorized BRP Dealer receives a proof that the former owner agreed to the transfer of owner- ship, in addition to the coordinates of the new owner.

9) CONSUMER ASSISTANCE

In the event of a controversy or a dispute in connection with this limited warranty, BRP suggests that you try to resolve the issue at the dealership level. We recommend dis- cussing the issue with the authorized BRP dealer's service manager or owner.

If the matter still remains unresolved, contact BRP by filling out the customer contact form at **www.brp.com** or contact BRP by mail at one of the addresses listed under the *Contact Us* section of this guide.

US EPA EMISSION - RELATED WARRANTY

Bombardier Recreational Products Inc. (“BRP”) warrants to the ultimate purchaser and each subsequent purchaser that this new vehicle, including all parts of its exhaust emission control system and its evaporative emission control system, meets two conditions:

1. It is designed, built, and equipped so it conforms at the time of sale to the ultimate purchaser with the requirements of 40 CFR 1051 and 40 CFR 1060.
2. It is free from defects in materials and workmanship that may keep it from meeting the requirements of 40 CFR 1051 and 40 CFR 1060.

Where a warrantable condition exists, BRP will repair or replace, as it elects, any part or component with a defect in materials or workmanship that would increase the engine’s emissions of any regulated pollutant within the stated warranty period at no cost to the owner, including expenses related to diagnosing and repairing or replacing emission-related parts. All defective parts replaced under this warranty become the property of BRP.

For all emission-related warranty claims, BRP is limiting the diagnosis and repair of emission-related parts to the authorized Can-Am dealers, unless for emergency repairs as required by item 2 of the following list.

As a certifying manufacturer, BRP will not deny emission-related warranty claims based on any of the following:

1. Maintenance or other service BRP or BRP's authorized facilities performed.
2. Engine/equipment repair work that an operator performed to correct an unsafe, emergency condition attributable to BRP as long as the operator tries to restore the engine/equipment to its proper configuration as soon as possible.
3. Any action or inaction by the operator unrelated to the warranty claim.
4. Maintenance that was performed more frequently than BRP specify.
5. Anything that is BRP fault or responsibility.
6. The use of any fuel that is commonly available where the equipment operates unless BRP written maintenance instructions state that this fuel would harm the equipment’s emission control system and operators can readily find the proper fuel. See maintenance information section and fuel requirements of fueling section.

Emission-Related Warranty Period

The emission-related warranty is valid for the following period whichever comes first.

	HOURS	MONTHS	KILOMETERS
Exhaust emission-related components	500	30	5000
Evaporative emission-related components	N/A	24	N/A

Components Covered

The emission-related warranty covers all components whose failure would increase an engine's emissions of any regulated pollutant, including the following listed components:

1. For exhaust emissions, emission-related components include any engine parts related to the following systems:
   - Air-induction system
   - Fuel system
   - Ignition system
   - Exhaust gas recirculation systems.
2. The following parts are also considered emission-related components for exhaust emissions:
   - After treatment devices
   - Crankcase ventilation valves
   - Sensors
   - Electronic control units.
3. The following parts are considered emission-related components for evaporative emissions:
   - Fuel tank
   - Fuel cap
   - Fuel line
   - Fuel line fittings
   - Clamps*
   - Pressure relief valves*
   - Control valves*
   - Control solenoids*
   - Electronic controls*
   - Vacuum control diaphragms*
   - Control cables*
   - Control linkages*
   - Purge valves
   - Vapor hoses
   - Liquid/vapor separator
   - Carbon canister

- Canister mounting brackets
- Carburetor purge port connector.

NOTE:
*As related to the evaporative emission control system.

4. Emission-related components also include any other part whose only purpose is to reduce emissions or whose failure will increase emissions without significantly degrading engine/equipment performance.

Limited Applicability

As a certifying manufacturer, BRP may deny emission-related warranty claims for failures that have been caused by the owner's or operator's improper maintenance or use, by accidents for which the manufacturer has no responsibility, or by acts of God. For example, an emission-related warranty claim need not be honored for failures that have been directly caused by the operator's abuse of the engine/equipment or the operator's use of the engine/equipment in a manner for which it was not designed and are not attributable to the manufacturer in anyway.

If you have any question regarding your warranty rights and responsibility or for the name and location of the nearest authorized BRP dealer, you should contact BRP by filling out the customer contact form at **www.brp.com** or contact BRP by mail at one of the addresses listed under the CONTACT US section of this guide, or call at 1-888-272-9222.

CALIFORNIA EVAPORATIVE EMISSIONS CONTROL WARRANTY STATEMENT

The warranty periods begin on the date the new Off-Highway Recreational Vehicle (“OHRV”) is delivered to an ultimate purchaser.

Bombardier Recreational Products Inc. (“BRP”) warrants to the ultimate purchaser and each subsequent purchaser that the OHRV is:

1. Designed, built, and equipped so as to conform, at the time of sale, with all applicable laws, rules and regulations; and
2. Free from defects in materials and workmanship that may cause the failure of a warranted part. All replacement parts must be identical in all material respects to that part as described in BRP’s Executive Order of Certification application.

The warranty on emissions-related parts function as follows:

1. Repair or replacement of any warranted part must be performed at no charge to the OHRV owner, at a warranty station, except in the case of a temporary repair when a warranted part or a warranty station is not reasonably available to the OHRV owner. In the event a temporary repair is permitted, repairs may be performed at any available service establishment, or by the owner, using any replacement part. BRP must reimburse the owner for his or her expenses including diagnostic charges for such temporary repair or replacement, not to exceed BRP's suggested retail price for all warranted parts replaced and labor charges based on BRP's recommended time allowance for the warranty repair and the geographically appropriate hourly labor rate.
2. The lack of availability of warranted parts or the incompleteness of repairs within a reasonable time period, not to exceed 30 days from the time the OHRV is initially presented to the warranty station for repair, will qualify the need for a temporary repair.
3. Any warranted part which is not scheduled for replacement as part of maintenance in the written instructions must be warranted for the warranty period defined below. If any such part fails during the warranty period, it must be repaired or replaced by BRP. Any such part repaired or replaced under warranty must be fully warranted.
4. Any warranted part which is scheduled only for regular inspection in the written instructions must be warranted for the warranty period defined below. A statement in such written instructions to the effect of “repair or replace as necessary” does not reduce the period of warranty coverage. Any such part repaired or replaced under warranty is warranted for the remaining warranty period.
5. Any warranted part which is scheduled for replacement as part of maintenance in the written instructions is warranted for the period of time prior to the first scheduled replacement point for that part. If the part fails before the first scheduled replacement point, the part will be repaired or replaced by BRP. Any such part repaired or replaced under warranty is warranted for the remainder of the period prior to the first scheduled replacement point for the part.

6. Warranty services or repairs are provided at all manufacturer dealerships that are owned by the manufacturer or franchised to service the subject OHRVs.
7. The OHRV owner will not be charged for diagnostic labor which leads to the determination that a warranted part is, in fact, defective, provided that such diagnostic work is performed at a warranty station.
8. BRP is liable for damages to other vehicle components proximately caused by a failure, under warranty, of any warranted part.
9. Any replacement part designated by BRP may be used in warranty repairs provided without charge to the OHRV owner. Such use will not reduce the warranty obligations of BRP, except that BRP will not be liable for repair or replacement of any replacement part which is not a warranted part.
10. Any add-on or modified part exempted by the Air Resources Board from the prohibitions of section 27156 of the California Vehicle Code may be used on an OHRV. Such use, in and of itself, will not be grounds for disallowing a warranty claim. BRP is not liable to warrant failures of warranted parts caused by the use of an add-on or modified part(s) unless such part(s) are also warranted.

Conditions and exclusions:

– BRP may deny you warranty coverage if your OHRV or a part has failed directly due to abuse, neglect, improper maintenance or unapproved modifications.

Your Warranty Rights And Obligations

The California Air Resources Board is pleased to explain the evaporative emissions control system warranty on your 2025 All-Terrain Vehicle. In California, new off-highway recreational vehicles must be designed, built, and equipped to meet the State's stringent anti-smog standards. BRP must warrant the evaporative emissions control system on your All-Terrain Vehicle for the periods of time listed below provided there has been no abuse, neglect, improper maintenance, or unapproved modification of your All-Terrain Vehicle.

Your evaporative emissions control system may include parts such as the carburetor or fuel-injection system, fuel tank, fuel hoses, carbon canister, and engine computer. Also included may be hoses, belts, connectors and other evaporative emissions-related assemblies. Where a warrantable condition exists, Bombardier Recreational Products Inc. will repair your All-Terrain Vehicle at no cost to you including diagnosis, parts and labor.

OHRV Manufacturer's Warranty Coverage

The warranty period for this OHRV is 60 months, or 5000 miles, or 500 hours, whichever comes first.

Parts covered:

1. Canister Mounting Bracket(s)
2. Carbon Canister
3. Purge Port Connector
4. Clamp(s)*
5. Electronic Control*
6. Fuel Cap
7. Filler Neck
8. Filler Neck Hose
9. Fuel Line(s)
10. Fuel Line Fitting(s)
11. Fuel Tank
12. Pressure Relief Valve(s)*
13. Purge Valve(s)
14. Check Valve(s)*
15. Vapor Hose(s)
16. Flow Reducer
17. Filter(s)*
18. Fuel pump
19. All other parts not listed that may affect the evaporative emissions control system

NOTE:
*As related to the evaporative emission control system.

If any evaporative emissions-related part on your All-Terrain Vehicle is defective the part will be repaired or replaced by Bombardier Recreational Products Inc.

Owner's Warranty Responsibilities

As the All-Terrain Vehicle owner, you are responsible for the performance of the required maintenance listed in your owner's manual. Bombardier Recreational Products Inc. recommends that you retain all receipts covering maintenance on your All-Terrain Vehicle, but Bombardier Recreational Products Inc. cannot deny warranty solely for the lack of receipts or for failure to ensure the performance of a scheduled maintenance.

As an owner you are responsible for presenting your All-Terrain Vehicle to a Bombardier Recreational Products Inc. dealer as soon as a problem exists. The warranty repairs should be completed in a reasonable time, not to exceed 30 days.

As an All-Terrain Vehicle owner, you should also be aware that Bombardier Recreational Products Inc. may deny you warranty coverage if your All-Terrain Vehicle or a part has failed due to abuse, neglect, improper maintenance or unapproved modifications.

If you have any questions regarding your warranty rights and responsibilities, you should contact:

- Bombardier Recreational Products Inc. at 1-888-272-9222 or,
- The California Air Resources Board at 4001 Iowa Avenue, Riverside, CA 92507.

BRP INTERNATIONAL LIMITED WARRANTY: 2025 CAN-AM® ATV

1) SCOPE OF THE LIMITED WARRANTY

Bombardier Recreational Products Inc. ("**BRP**") warrants its 2025 Can-Am ATV (the "**Product**") sold by distributors or dealers authorized by BRP to distribute the Pro- ducts outside of the United States of America ("**USA**"), Canada, member states of the European Economic Area (which is comprised of the states of the European Union plus the United Kingdom, Norway, Iceland and Liechtenstein) ("**EEA**"), member states of the Commonwealth of the Independent States (including Ukraine and Turkmenistan) ("**CIS**") and Turkey (a "**BRP Distributor/ Dealer**") from defects in material or workmanship for the period and under the conditions described below.

This limited warranty will become null and void if:

1. the Product was used for racing or any other competitive activity, at any point, even by a previous owner; or
2. the Product has been altered or modified in such a way so as to adversely affect its operation, performance or durability, or has been altered or modified to change its intended use.

Non-factory installed parts and accessories are not covered under this limited warranty. Please refer to the applicable parts and accessories limited warranty text.

2) LIMITATIONS OF LIABILITY

TO THE EXTEND PERMITTED BY LAW, THIS WARRANTY IS EXPRESSLY GIVEN AND ACCEPTED IN LIEU OF ANY AND ALL OTHER WARRANTIES, EXPRESSED OR IMPLIED, INCLUDING WITHOUT LIMITATION ANY WARRANTY OF MERCHANTABILITY OR FITNESS FOR A PARTICULAR PURPOSE. TO THE EXTENT THAT THEY CANNOT BE DISCLAIMED, THE IMPLIED WARRANTIES ARE LIMITED IN DURATION TO THE LIFE OF THE EXPRESS WARRANTY. INCIDENTAL AND CONSEQUENTIAL DAMAGES ARE EXCLUDED FROM COVERAGE UNDER THIS WARRANTY. SOME JURISDICTIONS DO NOT ALLOW FOR THE DISCLAIMERS, LIMITATIONS AND EXCLUSIONS IDENTIFIED ABOVE. AS A RESULT, THEY MAY NOT APPLY TO YOU. THIS WARRANTY GIVES YOU SPECIFIC RIGHTS, AND YOU MAY ALSO HAVE OTHER LEGAL RIGHTS WHICH MAY VARY FROM COUNTRY TO COUNTRY. BRP SHALL NOT BE HELD LIABLE IF PRODUCTS OR WARRANTY PARTS ARE NOT AVAILABLE IN CERTAIN COUNTRIES FOR REASONS OUTSIDE OF BRP'S CONTROL.

For Products purchased in Australia, refer to the Australia-specific section below.

Neither any BRP Distributor/Dealer nor any other person has been authorized to make any affirmation, representation or warranty regarding

the Product, other than those contained in this limited warranty, and if made, shall not be enforceable against BRP.

BRP reserves the right to modify this limited warranty at any time, being understood that such modification will not alter the warranty conditions applicable to the Products sold while this warranty is in effect.

3) EXCLUSIONS – ARE NOT WARRANTED

The following are not warranted under any circumstances:

- Normal wear and tear;
- Routine maintenance items, tune ups, adjustments;
- Damage caused by negligence or failure to provide proper maintenance and/or storage, as described in the Operator's Guide;
- Damage resulting from removal of parts, improper repairs, service, maintenance, modifications or use of parts not manufactured or approved by BRP or resulting from repairs done by a person that is not an authorized servicing BRP Distributor/ Dealer;
- Damage caused by abuse, abnormal use, neglect or operation of the Product in a manner inconsistent with the recommended operation described in the Product’s Operator’s Guide;
- Damage resulting from accident, submersion, fire, theft, vandalism or any act of God;
- Operation with fuels, oils or lubricants which are not suitable for use with the Product (see the Operator’s Guide);
- Damages from rust, corrosion or exposure to the elements;
- Damage resulting from water or snow ingestion;
- Incidental or consequential damages, or damages of any kind including without limitation transportation expenses, towing, storage, telephone, rental, taxi, inconvenience, insurance coverage, loan payments, loss of time, loss of income or time missed for downtime experience due to service work.

4) WARRANTY COVERAGE PERIOD

This limited warranty will be in effect from (1) the date of delivery to the first retail consumer, or (2) the date the Product is first put into use, whichever occurs first and for the applicable period below:

- SIX (6) consecutive months, for private use or commercial use owners

In AUSTRALIA and NEW ZEALAND only, this warranty will be in effect from (1) the date of delivery to the first retail consumer or (2) the date the Product is first put into use, whichever occurs first, and for a period of TWELVE (12) CONSECUTIVE MONTHS and THIRTY-SIX (36) CONSECUTIVE MONTHS for Powertrain Engine and Transmission systems only, for private use or commercial use.

The repair or replacement of parts or the performance of service under this warranty does not extend the life of this warranty beyond its original expiration date.

The warranty coverage period identified above are a minimal limited warranty period which can be extended by any applicable warranty promotional program, as the case may be.

Note that the duration and any other modalities of the warranty coverage are subject to the applicable national or local legislation in the customer's country.

FOR PRODUCTS SOLD IN AUSTRALIA ONLY

Our goods come with guarantees that cannot be excluded under the Australian Consumer Law.

You are entitled to a replacement or refund for a major failure and for compensation for any other reasonably foreseeable loss or damage.

You are also entitled to have the goods repaired or replaced if the goods fail to be of acceptable quality and the failure does not amount to a major failure.

Nothing in these Warranty terms and conditions should be taken to exclude, restrict or modify the application of any condition, warranty, guarantee, right or remedy conferred or implied under the Competition and Consumer Act 2010 (Cth), including the Australian Consumer Law or any other law, where to do so would contravene that law, or cause any part of these terms and conditions to be void. The benefits given to you under this limited warranty are in addition to other rights and remedies that you have under Australian law.

5) CONDITIONS TO HAVE WARRANTY COVERAGE

This warranty coverage is available only if each of the following conditions has been fulfilled:

- The Product must be purchased as new and unused by its first owner from a BRP Distributor/Dealer authorized to distribute the Products in the country in which the sale occurred;
- The BRP specified pre-delivery inspection process must be completed, documented and signed by the purchaser;
- The Product must have undergone proper registration by an authorized BRP Distributor/ Dealer;
- The Product must be purchased in the country in which the purchaser resides;
- Routine maintenance outlined in the Operator’s Guide must be timely performed in order to maintain warranty coverage. BRP

reserves the right to make warranty coverage contingent upon proof of proper maintenance.

BRP will not honor this limited warranty to any private use owner or commercial use owner if one of the preceding conditions has not been met. Such limitations are necessary in order to allow BRP to preserve both the safety of its products, and also that of its consumers and the general public.

6) WHAT TO DO TO OBTAIN WARRANTY COVERAGE

The customer must cease using the Product upon the appearance of an anomaly, notify a servicing BRP Distributor/Dealer within two (2) months of the appearance of the anomaly and provide the BRP Distributor/Dealer with reasonable access to the Product and reasonable opportunity to repair it.

The notification period is subject to the applicable national or local legislation in customer's country.

The customer must also present to the BRP Distributor/Dealer, proof of purchase of the Product and must sign the repair/work order prior to starting the repair in order to validate the warranty repair.

All parts replaced under this limited warranty become the property of BRP.

7) WHAT BRP WILL DO

To the extent permitted by law, BRP’s obligations under this warranty are limited to, at its sole discretion, repairing or replacing parts found defective under normal use, maintenance and service without charge for parts and labor, at any authorized BRP Distributor/Dealer during the warranty coverage period under the conditions described herein. BRP's responsibility is limited to making the required repairs or replacements of parts. No claim of breach of warranty shall be cause for cancellation or rescission of the sale of the Product to the owner. You may have other legal rights which may vary from country to country.

In the event that service is required outside of the country of original sale, the owner will bear responsibility for any additional charges due to local practices and conditions, such as, but not limited to, freight, insurance, taxes, license fees, import duties, and any and all other financial charges, including those levied by governments, states, territories and their respective agencies

BRP reserves the right to improve or modify products from time to time without assuming any obligation to modify products previously manufactured.

8) TRANSFER

If the ownership of a Product is transferred during the warranty coverage period, this limited warranty, subject to its terms and conditions, shall also be transferred and be valid for the remaining coverage period provided BRP or an authorized BRP Distributor/Dealer receives a proof that the former owner agreed to the transfer of ownership, in addition to the coordinates of the new owner.

9) CONSUMER ASSISTANCE

In the event of a controversy or a dispute in connection with this limited warranty, BRP suggests that you try to resolve the issue at the BRP Distributor/Dealer level. We recommend discussing the issue with the authorized BRP Distributor/Dealer's service manager or owner.

If the matter still remains unresolved, contact BRP by filling out the customer contact form at **www.brp.com** or contact BRP by mail at one of the addresses listed under the *Contact Us* section of this guide.

BRP LIMITED WARRANTY FOR THE EUROPEAN ECONOMIC AREA, THE COMMONWEALTH OF THE INDEPENDENT STATES AND TURKEY: 2025 CAN-AM® ATV

1) SCOPE OF THE LIMITED WARRANTY

Bombardier Recreational Products Inc. ("**BRP**") warrants its 2025 Can-Am ATV (the "**Product**") sold by distributors or dealers authorized by BRP to distribute the Products in member states of the European Economic Area (which is comprised of the states of the European Union plus the United Kingdom, Norway, Iceland and Liechtenstein) ("**EEA**"), member states of the Commonwealth of the Independent States (including Ukraine and Turkmenistan) ("**CIS**") and Turkey (a "**BRP Distributor/Dealer**") from defects in material or workmanship for the period and under the conditions described below.

This limited warranty will become null and void if:

1. the Product was used for racing or any other competitive activity, at any point, even by a previous owner; or
2. the Product has been altered or modified in such a way so as to adversely affect its operation, performance or durability, or has been altered or modified to change its intended use.

Non-factory installed parts and accessories are not covered under this limited warranty. Please refer to the applicable parts and accessories limited warranty text.

2) LIMITATIONS OF LIABILITY

TO THE EXTEND PERMITTED BY LAW, THIS WARRANTY IS EXPRESSLY GIVEN AND ACCEPTED IN LIEU OF ANY AND ALL OTHER WARRANTIES, EXPRESSED OR IMPLIED, INCLUDING WITHOUT LIMITATION ANY WARRANTY OF MERCHANTABILITY OR FITNESS FOR A PARTICULAR PURPOSE. TO THE EXTENT THAT THEY CANNOT BE DISCLAIMED, THE IMPLIED WARRANTIES ARE LIMITED IN DURATION TO THE LIFE OF THE EXPRESS WARRANTY. INCIDENTAL AND CONSEQUENTIAL DAMAGES ARE EXCLUDED FROM COVERAGE UNDER THIS WARRANTY. SOME JURISDICTIONS DO NOT ALLOW FOR THE DISCLAIMERS, LIMITATIONS AND EXCLUSIONS IDENTIFIED ABOVE. AS A RESULT, THEY MAY NOT APPLY TO YOU. THIS WARRANTY GIVES YOU SPECIFIC RIGHTS, AND YOU MAY ALSO HAVE OTHER LEGAL RIGHTS WHICH MAY VARY FROM JURISDICTION TO JURISDICTION. BRP SHALL NOT BE HELD LIABLE IF PRODUCTS OR WARRANTY PARTS ARE NOT AVAILABLE IN CERTAIN COUNTRIES FOR REASONS OUTSIDE OF BRP'S CONTROL.

For Products purchased in France, refer to the France-specific section below.

Neither any BRP Distributor/Dealer nor any other person has been authorized to make any affirmation, representation or warranty regarding the product, other than those contained in this limited warranty, and if made, shall not be enforce- able against BRP.

BRP reserves the right to modify this limited warranty at any time, being understood that such modification will not alter the warranty conditions applicable to the Products sold while this warranty is in effect.

3) EXCLUSIONS – ARE NOT WARRANTED

The following are not warranted under any circumstances:

- Normal wear and tear;
- Routine maintenance items, tune ups, adjustments;
- Damage caused by negligence or failure to provide proper maintenance and/or storage, as described in the Operator's Guide;
- Damage resulting from removal of parts, improper repairs, service, maintenance, modifications or use of parts not manufactured or approved by BRP or resulting from repairs done by a person that is not an authorized servicing BRP Distributor/ Dealer;
- Damage caused by abuse, abnormal use, neglect or operation of the Product in a manner inconsistent with the recommended operation described in the Product’s Operator’s Guide;
- Damage resulting from accident, submersion, fire, theft, vandalism or any act of God;
- Operation with fuels, oils or lubricants which are not suitable for use with the Product (see the Operator’s Guide);
- Damages from rust, corrosion or exposure to the elements;
- Damage resulting from water or snow ingestion;
- Incidental or consequential damages, or damages of any kind including without limitation transportation expenses, towing, storage, telephone, rental, taxi, inconvenience, insurance coverage, loan payments, loss of time, loss of income or time missed for downtime experience due to service work.

4) WARRANTY COVERAGE PERIOD

This limited warranty will be in effect from (1) the date of delivery to the first retail consumer, or (2) the date the Product is first put into use, whichever occurs first and for the applicable period below:

1. TWENTY-FOUR (24) consecutive months, for private use owners.
2. SIX (6) consecutive months, for commercial use owners.

A Product is used commercially when it is used in connection with any work or employment that generates income during any part of the warranty period. A Product is also used commercially when, at any point during the warranty period, it is licensed for commercial use.

The repair or replacement of parts or the performance of service under this warranty does not extend the life of this warranty beyond its original expiration date.

The warranty coverage period identified above are a minimal limited warranty period which can be extended by any applicable warranty promotional program, as the case may be.

Note that the duration and any other modalities of the warranty coverage are subject to the applicable national or local legislation in the customer's country.

5) FOR PRODUCTS SOLD IN FRANCE ONLY

The following terms and conditions are applicable to products sold in France only.

The seller shall deliver goods that are complying with the contract and shall be responsible for defects existing upon delivery. The seller shall also be responsible for defects resulting from packaging, assembling instructions or the installation when it is its responsibility per the contract or if accomplished under its responsibility. To be compliant with the contract, the good shall:

1. Be fit for normal use for goods similar thereto and, if applicable:
   - Correspond to the description provided by the seller and have the qualities presented to the buyer though sample or model;
   - Have the qualities that a buyer may legitimately expect considering the public declarations of the seller, the manufacturer of its representative, including in advertising or labeling; or
2. Have the characteristics mutually agreed upon as between the parties or be fit for the specific use intended by the buyer and brought to the attention of the seller and which were accepted by the seller.

The action for failure to comply is prescribed after two years after delivery of the goods. The seller is responsible for the warranty for hidden defects of the good sold if such hidden defects are rendering the good unfit for the intended use, or if they diminish its use in such a way that the buyer would not have acquired the good or would have given a lesser price, had he known. The action for such hidden defects shall be taken by the buyer within 2 years of the discovery of the defect.

6) CONDITIONS TO HAVE WARRANTY COVERAGE

This warranty coverage is available only if each of the following conditions has been fulfilled:

- The Product must be purchased as new and unused by its first owner from a BRP Distributor/Dealer authorized to distribute

Products in the country or in the case of the EEA, union of countries in which the sale occurred;
- The BRP specified pre-delivery inspection process must be completed, documented and signed by the purchaser;
- The Product must have undergone proper registration by an authorized BRP Distributor/ Dealer;
- The Product must be purchased in the country or in the case of the EEA, union of countries in which the purchaser resides;
- Routine maintenance outlined in the Operator's Guide must be timely performed in order to maintain warranty coverage. BRP reserves the right to make warranty coverage contingent upon proof of proper maintenance.

BRP will not honor this limited warranty to any private use owner or commercial use owner if one of the preceding conditions has not been met. Such limitations are necessary in order to allow BRP to preserve both the safety of its products, and also that of its consumers and the general public.

7) WHAT TO DO TO OBTAIN WARRANTY COVERAGE

The customer must cease using the Product upon the appearance of an anomaly, notify a servicing BRP Distributor/Dealer within two (2) months of the appearance of the anomaly and provide the BRP Distributor/Dealer with reasonable access to the Product and reasonable opportunity to repair it.

The notification period is subject to the applicable national or local legislation in customer's country.

The customer must also present to the BRP Distributor/Dealer, proof of purchase of the Product and must sign the repair/work order prior to starting the repair in order to validate the warranty repair.

All parts replaced under this limited warranty become the property of BRP.

8) WHAT BRP WILL DO

To the extent permitted by law, BRP's obligations under this warranty are limited to, at its sole discretion, repairing or replacing parts found defective under normal use, maintenance and service without charge for parts and labor, at any authorized BRP Distributor/Dealer during the warranty coverage period under the conditions described herein. No claim of breach of warranty shall be cause for cancellation or rescission of the sale of the Product to the owner. You may have other legal rights which may vary from country to country.

In the event that service is required outside of the country of original sale, or for EEA residents if service is required outside of the EEA, the

owner will bear responsibility for any additional charges due to local practices and conditions, such as, but not limited to, freight, insurance, taxes, license fees, import duties, and any and all other financial charges, including those levied by governments, states, territories and their respective agencies.

BRP reserves the right to improve or modify products from time to time without assuming any obligation to modify products previously manufactured.

9) TRANSFER

If the ownership of a Product is transferred during the warranty coverage period, this limited warranty, subject to its terms and conditions, shall also be transferred and be valid for the remaining coverage period provided BRP or an authorized BRP Distributor/Dealer receives a proof that the former owner agreed to the transfer of ownership, in addition to the coordinates of the new owner.

10) CONSUMER ASSISTANCE

In the event of a controversy or a dispute in connection with this limited warranty, BRP suggests that you try to resolve the issue at the BRP Distributor/Dealer level. We recommend discussing the issue with the authorized BRP Distributor/Dealer's service manager or owner.

If the matter still remains unresolved, contact BRP by filling out the customer contact form at **www.brp.com** or contact BRP by mail at one of the addresses listed under the *Contact Us* section of this guide.

CUSTOMER INFORMATION

DATA PRIVACY INFORMATION

Bombardier Recreational Products Inc., its affiliates and subsidiaries (“BRP”) is committed to protecting your privacy and support a general policy of openness about how we collect, use and disclose your personal information in the course of managing our relationship with you. More details can be found by visiting BRP’s Privacy Policy at:
HTTPS://BRP.COM/EN/PRIVACY-POLICY.HTML
or by scanning the following QR Code.

Please be assured that we have appropriate security measures in place to ensure that your personal information is protected against loss and unauthorized access.

Your personal information that may be collected by BRP, directly from you or from authorized dealers or authorized third parties, includes:

– Contact, Demographic & Registration Information (e.g., name, full address, phone number, email, gender, ownership history, language of communication)
– Vehicle Information (e.g., serial number, purchase and delivery date, unit usage, vehicle location and movements)
– Third Party Information (e.g., information received from BRP partners, joint marketing activities information, social media)
– Technological Information (e.g., IP address, type of device, operating system, browser type, webpages you view, cookies and similar technologies when you use BRP or dealers’ websites or mobile application)
– Interaction with BRP Information (e.g., information collected when you call BRP’s in-house sales representatives, buy items on a BRP website, sign up for BRP emails, participate in BRP-sponsored contests and sweepstakes or attend BRP-sponsored events)
– Transactional Information (e.g., information necessary to handle returns, payment information when you purchase our products or services through our websites or mobile applications and other issues related to your purchase of BRP products)

This information may be used and processed for the following purposes:

– Safety & Security

- Customer Support for Sales and After Sales (e.g., complete or follow up with you about your purchase or maintenance)
- Registration & Warranty
- Communication (e.g., sending you a BRP satisfaction survey)
- Online Behavioural Advertising, Profiling and Location-Based Services
  (e.g., offer customized experience)
- Compliance & Dispute Resolution
- Marketing & Advertising
- Assistance (e.g., help with any delivery issues, handle returns, and other issues related to your purchase of BRP products).

We also may use personal information to generate aggregated or statistical data that no longer identifies you personally.

Your personal information may be disclosed to the following: BRP, BRP's authorized dealerships, distributors, service providers, advertising and market research partners and other authorized third parties.

We may receive information about you from diverse sources, including third parties, such as BRP's authorized dealerships and partners, with whom we offer services or engage in joint-marketing activities. We may also receive information about you from social media platforms when you interact with us on those platforms.

Depending on the circumstances, your personal information may be communicated outside the region where you reside. Your personal information is retained only for as long as necessary for the purpose for which we obtained it and according to our retention policies.

To exercise your data privacy rights (e.g. right of access, right of rectification), to withdraw your consent in order to be removed from the address list for marketing purposes or for the satisfaction survey or for general data privacy questions, please contact BRP's Data Protection Officer at or by mail at **privacyofficer@brp.com** or by mail at:
BRP Legal Service, 726 St-Joseph, Valcourt, Quebec, Canada, J0E 2L0.

When BRP processes your personal information, they do so in compliance with its Privacy Policy available at:
HTTPS://BRP.COM/EN/PRIVACY-POLICY.HTML
or by using the following QR Code.

CONTACT US

www.brp.com

Asia Pacific

BRP Asia
107D and 107E, 17/F, Tower 1,
Grand Century Place, Mongkok,
Kowloon, Hong Kong

Australia
Level 26
477 Pitt Street
Sydney, NSW 2020

China
上海市徐汇区衡山路10号6号楼301
Rm 301, Building 6,
No.10 Heng Shan Rd,
Shanghai, China

Japan
21F Shinagawa East One Tower
2–16–1 Konan, Minato-ku-ku,
Tokyo 108–0075

Europe, Middle East and Africa

Belgium
Oktrooiplein 1
9000 Gent

Czech Republic
Stefanikova 43a
Prague 5
150 00

Germany
Alte Papierfabrik 16
D-40699 Erkrath

Finland
Isoaavantie 7
PL 8040
96101 Rovaniemi

France
Arteparc Bâtiment B
Route de la côte d'Azur, Le Canet
13 590 Meyreuil

Norway
Ingvald Ystgaards veg 15
N-7484 Trondheim

Sweden
Spinnvägen 15
903 61 Umeå

Switzerland
Avenue d'Ouchy 4-6
1006 Lausanne

Latin America

Brazil
Rua Odila Maia Rocha Brito, 25
Edificio Beaumont, andar 1 ao 5
CEP 13092-110 Campinas -SP

Mexico
Av. Ferrocarril 202
Parque Industrial Querétaro
Santo Rosa Jauregui, Querétaro
C.P. 76220

North America

Canada
3200A, rue King Ouest,
Suite 300
Sherbrooke (Québec) J1L 1C9

United States of America
10101 Science Drive
Sturtevant, Wisconsin
53177

CHANGE OF ADDRESS AND OWNERSHIP

If your address has changed or if you are the new owner of the vehicle, be sure to notify BRP by either:

- Notifying an authorized Can-Am dealer.
- **North America Only**: calling at 1 888 272-9222.
- Mailing one of the change of address cards on the following pages at one of the BRP addresses indicated in the *Contact Us* section of this guide.

In case of change of ownership, please join a proof that the former owner agreed to the transfer.

Notifying BRP, even after the expiration of the limited warranty, is very important as it enables BRP to reach the vehicle owner if necessary, like when safety recalls are initiated. It is the owner's responsibility to notify BRP.

STOLEN UNITS: If your personal vehicle is stolen, you should notify BRP or an authorized Can-Am dealer. We will ask you to provide your name, address, phone number, the vehicle identification number and the date it was stolen.

CHANGE OF ADDRESS ❑ CHANGE OF OWNERSHIP ❑

VEHICLE IDENTIFICATION NUMBER

Model Number Vehicle Identification Number (V.I.N.)

OLD ADDRESS OR PREVIOUS OWNER:

NAME

NO. STREET APT

CITY STATE/PROVINCE ZIP/POSTAL CODE

COUNTRY TELEPHONE

NEW ADDRESS OR NEW OWNER:

NAME

NO. STREET APT

CITY STATE/PROVINCE ZIP/POSTAL CODE

COUNTRY TELEPHONE

E-MAIL ADDRESS

CHANGE OF ADDRESS ❑ CHANGE OF OWNERSHIP ❑

VEHICLE IDENTIFICATION NUMBER

Model Number Vehicle Identification Number (V.I.N.)

OLD ADDRESS OR PREVIOUS OWNER:

NAME

NO. STREET APT

CITY STATE/PROVINCE ZIP/POSTAL CODE

COUNTRY TELEPHONE

NEW ADDRESS OR NEW OWNER:

NAME

NO. STREET APT

CITY STATE/PROVINCE ZIP/POSTAL CODE

COUNTRY TELEPHONE

E-MAIL ADDRESS

This page is
intentionally blank

CHANGE OF ADDRESS ❑ CHANGE OF OWNERSHIP ❑

VEHICLE IDENTIFICATION NUMBER

Model Number Vehicle Identification Number (V.I.N.)

OLD ADDRESS OR PREVIOUS OWNER:

NAME

NO. STREET APT

CITY STATE/PROVINCE ZIP/POSTAL CODE

COUNTRY TELEPHONE

NEW ADDRESS OR NEW OWNER:

NAME

NO. STREET APT

CITY STATE/PROVINCE ZIP/POSTAL CODE

COUNTRY TELEPHONE

E-MAIL ADDRESS

CHANGE OF ADDRESS ❑ CHANGE OF OWNERSHIP ❑

VEHICLE IDENTIFICATION NUMBER

Model Number Vehicle Identification Number (V.I.N.)

OLD ADDRESS OR PREVIOUS OWNER:

NAME

NO. STREET APT

CITY STATE/PROVINCE ZIP/POSTAL CODE

COUNTRY TELEPHONE

NEW ADDRESS OR NEW OWNER:

NAME

NO. STREET APT

CITY STATE/PROVINCE ZIP/POSTAL CODE

COUNTRY TELEPHONE

E-MAIL ADDRESS

This page is
intentionally blank

NOTE:

NOTE:

NOTE:

NOTE:

NOTE:

NOTE:

NOTE:

NOTE:

NOTE:

NOTE:

Model No. _____

VEHICLE
IDENTIFICATION NUMBER (V.I.N.) _____

ENGINE
IDENTIFICATION NUMBER (E.I.N.) _____

Owner: _____
NAME

_____
No. STREET APT

_____
CITY STATE/PROVINCE ZIP/POSTAL CODE

Purchase Date _____ | _____ | _____ | _____ | _____
YEAR MONTH DAY

Warranty Expiry Date _____ | _____ | _____ | _____ | _____
YEAR MONTH DAY

To be completed by the dealer at the time of the sale.

DEALER IMPRINT AREA

⚠ WARNING

THIS VEHICLE CAN BE HAZARDOUS TO OPERATE. A collision or rollover can occur quickly, even during routine maneuvers such as turning and driving on hills or over obstacles, if you fail to take proper precautions.

SEVERE INJURY OR DEATH
can result if you do not follow these instructions:

- BEFORE YOU OPERATE THIS VEHICLE, READ THIS OPERATOR'S GUIDE, ALL ON PRODUCT SAFETY LABELS AND WATCH THE SAFETY VIDEO.
- NEVER OPERATE THIS VEHICLE WITHOUT PROPER INSTRUCTIONS.
  Complete a certified training course.
- FOR MAX MODELS, NEVER CARRY MORE THAN ONE PASSENGER. You increase your risk of losing control if you carry more than one passenger.
- FOR 1UP MODELS, NEVER CARRY A PASSENGER. You increase your risk of losing control if you carry a passenger.
- ALWAYS RESPECT THE ROAD TRAFFIC LAWS when you operate the vehicle on the roadway, even a dirt or gravel road.
- OPERATOR AND PASSENGER (MAX models) SHOULD ALWAYS WEAR AN APPROVED HELMET, eye protection, and protective clothing.
- NEVER USE WITH DRUGS OR ALCOHOL. They slow reaction time and impair judgment.
- NEVER OPERATE THIS VEHICLE AT EXCESSIVE SPEEDS.
  You increase your risk of losing control if you operate this vehicle at speeds too fast for the terrain, visibility conditions, or your experience.
- NEVER ATTEMPT WHEELIES, JUMPS, OR OTHER STUNTS.

®TM and the BRP logo are trademarks of BOMBARDIER RECREATIONAL PRODUCTS INC. or its affiliates.
©2024 BOMBARDIER RECREATIONAL PRODUCTS INC. ALL RIGHTS RESERVED.

www.brp.com

ALUMACRAFT® **CAN-AM®** **LYNX®**

MANITOU® **QUINTREX®** **ROTAX®**

SEA-DOO® **SKI-DOO®**