can-am

BRP

MAVERICK SPORT MAX SERIES

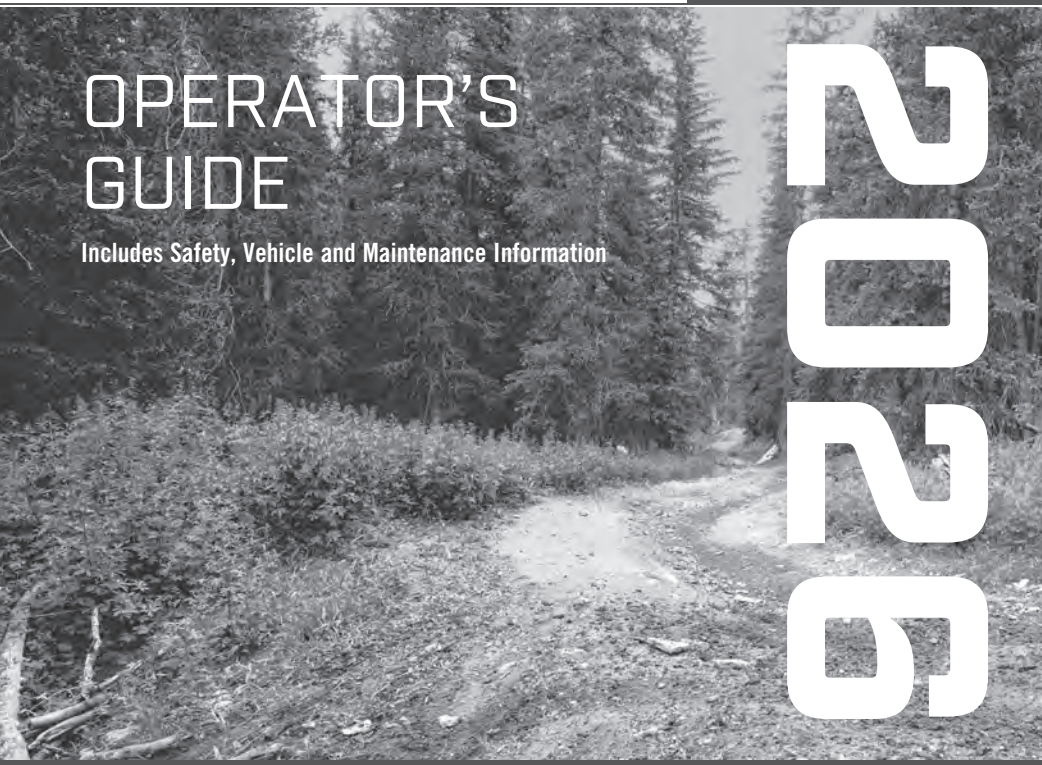

OPERATOR'S GUIDE

Includes Safety, Vehicle and Maintenance Information

2025

⚠ WARNING

Read this operator's guide thoroughly. It contains important safety information.
Minimum recommended operator age: 16 or older with a valid driver's license.
Keep this operator's guide with the vehicle at all times.
The removal or modification of evaporative emission-related parts on this OHRV is illegal.
Violators may be subject to civil and/or criminal penalties under California and federal law.

219002517

Original Instruction

⚠ WARNING

YOUR VEHICLE CAN BE HAZARDOUS TO OPERATE. A collision or roll-over can occur quickly, if you fail to take proper precautions, even during routine maneuvers such as turning and driving on hills or over obstacles. For your safety, understand and follow all the warnings contained in this operator's guide and on the labels on your vehicle. Failure to follow these warnings can result in SEVERE INJURY OR DEATH.
Keep this operator's guide with the vehicle at all times.

⚠ WARNING

Disregarding any of the safety precautions and instructions contained in the Operators's Guide, Safety video and on product safety labels could cause injury including the possibility of death.

⚠ WARNING

This vehicle may exceed the performance of other vehicles you may have ridden in the past. Take time to familiarize yourself with your new vehicle.

CALIFORNIA PROPOSITION 65 WARNING

⚠ WARNING

Operating, servicing and maintaining an off-road vehicle can expose you to chemicals including engine exhaust, carbon monoxide, phthalates, and lead, which are known to the State of California to cause cancer and birth defects or other reproductive harm. To minimize exposure, avoid breathing exhaust, do not idle the engine except as necessary, service your vehicle in a well-ventilated area and wear gloves or wash your hands frequently when servicing your vehicle. For more information go to www.p65warnings.ca.gov/products/passenger-vehicle.

™® Trademarks of BRP or its affiliates.
This is a non-exhaustive list of trademarks that are the property of Bombardier Recreational Products Inc. or its affiliates.
Trademarks may not be registered in every jurisdiction.

Can-Am®	D.E.S.S.™	DPS®
ROTAX®	XPS®	LinQ®

All rights reserved. No parts of this Operator's guide may be reproduced in any form without the prior written permission of Bombardier Recreational Products Inc.
©Bombardier Recreational Products Inc. (BRP) 2025

Deutsch	Dieses Handbuch ist möglicherweise in Ihrer Landessprache verfügbar. Bitte wenden Sie sich an Ihren Händler oder besuchen Sie: **www.operatorsguides.brp.com**
English	This guide may be available in your language. Check with your dealer or go to: **www.operatorsguides.brp.com**
Español	Es posible que este manual esté disponible en su idioma. Consulte a su distribuidor o visite: **www.operatorsguides.brp.com**
Français	Ce guide peut être disponible dans votre langue. Vérifier avec votre concessionnaire ou aller à: **www.operatorsguides.brp.com**
Italiano	Questa guida potrebbe essere disponibile nella propria lingua. Contattare il concessionario o consultare: **www.operatorsguides.brp.com**
中文	本手册可能有您的语种的翻译版本。请向经销商问询，或者登录 www.operatorsguides.brp.com 查询。
日本語	このガイドは、言語によって翻訳版が用意されています。. ディーラーに問い合わせるか、次のアドレスでご確認ください： **www.operatorsguides.brp.com**
Nederlands	Deze handleiding kan beschikbaar zijn in uw taal. Vraag het aan uw dealer of ga naar: **www.operatorsguides.brp.com**
Norsk	Denne boken kan finnes tilgjengelig på ditt eget språk. Kontakt din forhandler eller gå til: **www.operatorsguides.brp.com**
Português	Este manual pode estar disponível em seu idioma. Fale com sua concessionária ou visite o site: **www.operatorsguides.brp.com**
Русский	Воспользуйтесь руководством на вашем языке. Узнайте о его наличии у дилера или на странице по адресу **www.operatorsguides.brp.com**
Suomi	Käyttöohjekirja voi olla saatavissa omalla kielelläsi. Tarkista jälleenmyyjältä tai käy osoitteessa: **www.operatorsguides.brp.com**
Svenska	Denna bok kan finnas tillgänglig på ditt språk. Kontakta din återförsäljare eller gå till: **www.operatorsguides.brp.com**

Covered Models
Maverick Sport MAX DPS 1000R

In Canada, products are distributed and serviced by Bombardier Recreational Products Inc. (BRP).

In the USA, products are distributed and serviced by BRP US Inc.

In the European Economic Area (which is comprised of the member states of the European Union plus the United Kingdom, Norway, Iceland and Liechtenstein), the Commonwealth of the Independent States (including Ukraine and Turkmenistan) and Turkey, products are distributed and serviced by BRP European Distribution S.A. and other affiliates or subsidiaries of BRP.

For all other countries, products are distributed and serviced by Bombardier Recreational Products Inc. (BRP) or its affiliates.

TABLE OF CONTENTS

GENERAL INFORMATION

GENERAL INFORMATION 10
Know Before you Go 10
Safety Messages 10
About this Operator's Guide 11

SAFETY INFORMATION

GENERAL PRECAUTIONS 14
Avoid Carbon Monoxide Poisoning 14
Avoid Gasoline Fires and Other Hazards 14
Avoid Burns from Hot Parts 14
BEFORE YOU GO 15
Operating Age and Ability 15
Drugs and Alcohol 15
Protective Gear 15
Required Equipment 18
SAFE OPERATION - RESPONSIBILITIES 19
Owner - Be Responsible 19
Operator - Be Qualified and Responsible 19
Riding Carefully 20
Occupant Restraint System 21
Terrain Condition 21
GET FAMILIAR WITH THE VEHICLE 22
Off-Road Operation 22
Steering 22
Braking 23
Accessories and Modifications 23
AVOID ACCIDENTS 24
Avoid Rollovers and Tipovers 24
Avoid Collisions 25
RIDING YOUR VEHICLE 26
Practice Exercises 26
Off-Road Operation 27
General Riding Techniques 27
MOVING LOADS AND DOING WORK 33
Working with Your Vehicle 33
Carrying Loads 33
Hauling a Load 34
Pulling a Trailer 35
IMPORTANT ON-PRODUCT LABELS(CANADA/UNITED STATES) 37
Safety Hang Tag 37
Safety Labels 38
Compliance HangTag 54
IMPORTANT ON-PRODUCT LABELS (COUNTRIES OUTSIDE CANADA AND UNITED STATES) 55
Safety Pictogram 56

PRE-RIDE INSPECTION **73**
Pre-Ride Inspection Check List 73
REPORTING SAFETY DEFECTS **76**

VEHICLE INFORMATION

PRIMARY CONTROL **78**
Steering Wheel 79
Accelerator Pedal 79
Brake Pedal 79
Shift Lever 79
SECONDARY CONTROLS **81**
Ignition Switch and Keys 82
Headlight Dimmer Switch 83
2WD/4WD Switch 83
Front Differential Mode Switch 84
Rear Differential Lock Switch 84
Keypad 85
Winch Switch 85
Horn Switch (On applicable models) 85
EQUIPMENT **87**
Tilt Steering 87
Cup Holders 87
Passenger's Handhold 87
Storage Compartments 88
Tool Kit 88
Footrests 88
Half Doors 88
Seat Belts 89
Driver's Seat 90
Passenger's Seat 91
Fuel Reservoir Cap 91
Winch 91
Cargo Box 92
Anchoring Hooks 92
Trailer Hitch 92
12-Volt Power Outlet 92
Full Underbody Skid Plate 93
4.5" DIGITAL DISPLAY **94**
MULTIFUNCTION DISPLAY 94
SETTINGS 96
7.6" DIGITAL DISPLAY **98**
Multifunction Display 98
Settings 100
FUEL **102**
Fuel Requirements 102
Vehicle Fueling Procedure 102
BREAK-IN PERIOD **104**
Operation During Break-In 104
BASIC PROCEDURES **105**
Starting the Engine 105
Operating the Shift Lever 105

Choosing the Correct Range (Low or High) 105
Stopping the Engine and Parking the Vehicle 106
Tips for Maximizing Drive Belt Durability 106
SPECIAL PROCEDURES 107
Fuel Flooded Engine 107
What to do if Water is Suspected to be in the CVT 107
What to do if Battery is Drained Out 107
What to Do if Vehicle Rolled Over 107
What to do if Vehicle is Submerged 108
TUNE YOUR RIDE 109
Suspension Adjustment Guidelines 109
Suspension Factory Settings 109
Suspension Adjustments 109
DPS Function 110
TRANSPORTING THE VEHICLE 111
Using Vehicle Power to Climb Onto Trailering Equipment 112
Using a Winch to Pull Vehicle Onto Trailering Equipment 112
Securing Vehicle for Transport 113
Getting Vehicle Out of Trailer 113
LIFTING AND SUPPORTING THE VEHICLE 114
Front of Vehicle 114
Rear of Vehicle 114

MAINTENANCE

MAINTENANCE SCHEDULE 116
EPA Regulation - Canadian and USA Vehicles 116
Air Filter Maintenance Guideline 116
Severe Duty Use 117
Deep Mud / Water Use 117
Maintenance Schedule 118
Maintenance Records 129
MAINTENANCE PROCEDURES 134
Accessing Maintenance Components 134
ENGINE AIR FILTER 137
CVT Air Filter 138
Evaporative Emission System Pre-Filter (If Equipped) 139
ENGINE OIL 140
OIL FILTER 141
RADIATOR 142
ENGINE COOLANT 143
EXHAUST SYSTEM 145
GEARBOX 146
FRONT DIFFERENTIAL 148
SPARK PLUGS 149
CVT COVER 149
Drive Belt 150
Drive and Driven Pulleys 152
BATTERY 152
Fuses and Fusible Links 153
Lights 155
Drive Shaft Bellow and Protector 156

Wheel Bearing 156
Wheels and Tires 157
SUSPENSION 158
BRAKES 160
SEAT BELTS 161
Doors 161
CAGE 161
VEHICLE CARE 163
Vehicle Cleaning and Protection 163
STORAGE AND PRESEASON PREPARATION 164

TECHNICAL INFORMATION

VEHICLE IDENTIFICATION 166
Vehicle Identification Number 166
Engine Identification Number (EIN) 166
Compliance Label 167
Technical Information Label 169
BRP RF DESS POST GEN3 (CAN) 174
USA and Canada 174
Mexico 175
Brazil 175
Japan 176
Europe 176
EVAPORATIVE EMISSION CONTROL SYSTEM 180
NOISE EMISSION CONTROL SYSTEM REGULATION 181
NOISE EMISSION AND VIBRATION VALUES 182
Machinery Directive 2006/42/EC Compliant Models 182
DECLARATION OF CONFORMITY 183
EU Declaration of Conformity 183
UK Declaration of Conformity 184
EAC DECLARATION OF CONFORMITY 185

TECHNICAL SPECIFICATIONS

TECHNICAL SPECIFICATIONS 188

TROUBLESHOOTING

TROUBLESHOOTING GUIDELINES 196
CVT Belt Is Slipping 196
“–” Is Displayed On the Gearbox Position Display 196
Engine Does Not Turn 196
Engine Turns Over But Fails To Start 197
Engine Lacks Acceleration or Power 197
Engine Overheats 198
Engine Misfire 198
The RPM Increases But the Vehicle Does Not Move 198
Partial or No Response From the Accelerator Pedal - Check Engine Is ON and PPS Fault Message Is Displayed 199

DIGITAL DISPLAY MESSAGES.....200

WARRANTY

BRP LIMITED WARRANTY FOR CANADA AND USA: 2026 CAN-AM® SSV.....202
1) Scope of the Limited Warranty.....202
2) Limitations of Liability.....202
3) EXCLUSIONS – Are Not Warranted.....202
4) Warranty Coverage Period.....203
5) Conditions to Have Warranty Coverage.....203
6) What to Do to Obtain Warranty Coverage.....204
7) What BRP Will Do.....204
8) Transfer.....204
9) Consumer Assistance.....204
US EPA EMISSION - RELATED WARRANTY.....205
Emission-Related Warranty Period.....205
Components Covered.....205
Limited Applicability.....206
CALIFORNIA EVAPORATIVE EMISSIONS CONTROL WARRANTY STATEMENT.....208
Your Warranty Rights And Obligations.....209
OHRV Manufacturer's Warranty Coverage.....209
Owner's Warranty Responsibilities.....210
BRP LIMITED WARRANTY FOR INTERNATIONAL: 2026 CAN-AM® SSV.....211
1) Scope of the Limited Warranty.....211
2) Limitation of Liability.....211
3) EXCLUSIONS – Are Not Warranted.....212
4) Warranty Coverage Period.....212
5) For Products Sold In Australia Only.....213
6) Conditions to Have Warranty Coverage.....213
7) What to Do to Obtain Warranty Coverage.....214
8) What BRP Will Do.....214
9) Transfer.....214
10) Consumer Assistance.....214
BRP LIMITED WARRANTY FOR THE EUROPEAN ECONOMIC AREA, THE COMMONWEALTH OF THE INDEPENDENT STATES AND TURKEY: 2026 CAN-AM® SSV.....216
1) Scope of the Limited Warranty.....216
2) Limitations of Liability.....216
3) EXCLUSIONS – Are Not Warranted.....217
4) Warranty Coverage Period.....217
5) For Products Sold In France Only.....218
6) Conditions to Have Warranty Coverage.....218
7) What to Do to Obtain Warranty Coverage.....219
8) What BRP Will Do.....219
9) Transfer.....219
10) Consumer Assistance.....220

CUSTOMER INFORMATION

DATA PRIVACY INFORMATION **222**
CONTACT US **224**
Asia Pacific 224
Europe, Middle East and Africa 224
Latin America 225
North America 225
CHANGE OF ADDRESS AND OWNERSHIP **226**

GENERAL INFORMATION

GENERAL INFORMATION

Congratulations on your purchase of a new Can-Am® side-by-side vehicle. It's backed by the BRP limited warranty and a network of authorized Can-Am Off--road dealers ready to provide the parts, accessories or service you may require.

At delivery, you were informed of the warranty coverage and signed the Pre-delivery Check List to ensure your new vehicle was prepared to your entire satisfaction.

Your dealer is committed to your satisfaction. If you need more information, please ask your dealer.

Know Before you Go

To learn how to reduce the risk of accident for you or bystanders, read this Operator's Guide before you operate the vehicle.

Also, read all safety labels on your vehicle and watch the *Safety Video* located at:

https://can-am.brp.com/off road/safety

Or use the following QR code.

This vehicle is for off-road use only. It is mainly for general recreational use but it may also be used for utility purposes.

Failure to follow the warnings contained in this Operator's Guide can result in SERIOUS INJURY or DEATH.

Safety Messages

The types of safety messages, what they look like and how they are used in this guide are explained as follows:

The safety alert symbol ⚠ indicates a potential injury hazard.

⚠ WARNING
Indicates a potential hazard which, if not avoided, could result in serious injury or death.

⚠ CAUTION
Indicates a hazardous situation which, if not avoided, could result in minor or moderate injury.

NOTICE

Indicates an instruction which, if not followed, could result in severely damaged vehicle components or other property.

About this Operator’s Guide

This Operator's Guide has been prepared to acquaint the owner/operator of a new vehicle with the various vehicle controls, maintenance and safe operating instructions. It is indispensable for the proper use of the product.

Keep this Operator's Guide in the vehicle as you can refer to it for things such as maintenance, troubleshooting and instructing others.

Note that this guide is available in several languages. In the event of any discrepancy, the English version shall prevail.

If you want to view and/or print an extra copy of your Operator's Guide, simply visit the following website:

www.operatorsguides.brp.com

The information contained in this document is correct at the time of publication. BRP, however, maintains a policy of continuous improvement of its products without imposing upon itself any obligation to install them on products previously manufactured. Due to late changes, some differences between the manufactured product and the descriptions and/or specifications in this guide may occur. BRP reserves the right at any time to discontinue or change specifications, designs, features, models or equipment without incurring any obligation upon itself.

This Operator's Guide should remain with the vehicle when it is sold.

This page is intentionally blank

SAFETY INFORMATION

GENERAL PRECAUTIONS

Avoid Carbon Monoxide Poisoning

All engine exhaust contains carbon monoxide, a deadly gas. Breathing carbon monoxide can cause headaches, dizziness, drowsiness, nausea, confusion and eventually death.

Carbon monoxide is a colorless, odorless, tasteless gas that may be present even if you do not see or smell any engine exhaust. Deadly levels of carbon monoxide can collect rapidly, and you can quickly be overcome and unable to save yourself. Also, deadly levels of carbon monoxide can linger for hours or days in enclosed or poorly ventilated areas. If you experience any symptoms of carbon monoxide poisoning, leave the area immediately, get fresh air and seek medical treatment.

To prevent serious injury or death from carbon monoxide:

– Never run the vehicle in poorly ventilated or partially enclosed areas such as garages, carports or barns. Even if you try to ventilate engine exhaust with fans or open windows and doors, carbon monoxide can rapidly reach dangerous levels.
– Never run the vehicle outdoors where engine exhaust can be drawn into a building through openings such as windows and doors.

Avoid Gasoline Fires and Other Hazards

Gasoline is extremely flammable and highly explosive. Fuel vapors can spread and be ignited by a spark or flame many feet away from the engine. To reduce the risk of fire or explosion, follow these instructions:

– Use only an approved gasoline container to store fuel.
– Never fill the gasoline container in the vehicle cargo box or on the vehicle - an electrical static discharge may ignite the fuel.
– Strictly adhere to instructions in *Vehicle fueling procedure*.
– Never start or operate the engine if the fuel cap is not properly installed.

Gasoline is poisonous and can cause injury or death.

– Never siphon gasoline by mouth.
– If you swallow gasoline, get any in your eye(s), or inhale gasoline vapor, see a doctor immediately.

If gasoline spills on you, wash with soap and water and change your clothes.

Avoid Burns from Hot Parts

Certain components like brake rotors and exhaust components become hot during operation. Avoid contact with those parts during and shortly after operation to avoid burn wounds.

BEFORE YOU GO

⚠ WARNING

Disregarding any of the safety precautions and instructions contained in this section could cause injury including the possibility of death.

Operating Age and Ability

Operators must be qualified.

Make sure the operator is 16 or older. Your state (or province) may have additional requirements.

Laws regarding the minimum age and licensing requirements vary from one jurisdiction to another. Be sure to contact the local authorities for information regarding the legal operation of an off-road vehicle in the intended jurisdiction of use.

BRP highly recommends that you take a safety riding course. Basic training is required for the safe operation of any off-road vehicles.

Operation of this vehicle with a disability that impairs vision, reaction time, judgment, or operation of the controls is not recommended.

The safe use of this vehicle depends on many conditions such as visibility, speed, weather, environment, traffic, vehicle condition and the condition of the operator.

The performance of this vehicle may significantly exceed that of other off-road vehicles you have operated. Therefore, use by novice or inexperienced operators is not recommended.

Each passenger must be tall enough to always be properly seated: back against the backrest with seat belt fastened, holding both handholds, and feet firmly planted on the floor.

Drugs and Alcohol

Never ride after consuming alcohol or drugs.

Riding this vehicle requires the operator and passenger(s) to be sober, attentive and alert.

The use of drugs and alcohol, singly or in combination, decreases reaction time, impedes judgment, impairs vision, and inhibits your ability to safely ride.

Protective Gear

It is important that the operator and passenger always wears appropriate protective clothing and apparel, including:

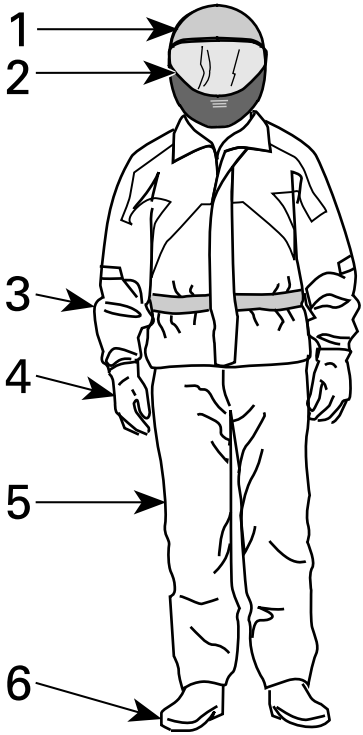

1. *Approved helmet*
2. *Eye and face protection*
3. *Long sleeves shirt or jacket*
4. *Gloves*
5. *Long pants*
6. *Boots (over-the-ankle footwear)*

Depending on conditions, anti-fogging goggles may be required.

Weather conditions should help you decide how to dress. To maximize comfort and avoid frostbites in winter, dress for the coldest weather expected. Thermal underwear next to the skin also provides good insulation.

Never wear any loose clothing that may get entangled in the vehicle or on tree branches and shrubs.

Helmets and Eye Protection

Helmets protect the head and brain from injury. Even with the vehicle's cage and doors, objects can enter the cockpit and strike the head, or the head can strike the cage itself or objects outside the vehicle. Even the best helmet is no guarantee against injury, but statistics indicate that helmet use significantly reduces the risk of brain injury. So, be safe and always wear a helmet while riding.

Choosing a Helmet

Helmets should be manufactured to meet the appropriate standard in your state, province or country and should fit properly.

A helmet with face protection is a better choice as it protects also against frontal impacts. It can also protect against debris, stones, insects, the elements, etc.

An open-face helmet does not offer the same protection for the face and chin. If you wear an open-face helmet, you should use a snap-on face shield and/or a pair of goggles. Ordinary glasses or sunglasses are not sufficient eye protection for riders. They can shatter or fly off, and they allow wind and airborne objects to reach the eyes.

For winter riding conditions, a stocking type cap, balaclava and face mask should always be carried or worn.

Use tinted face shields or goggles in the daytime only; do not use them at night or in poor illumination. Do not use them if they impair your ability to discern color.

Other Riding Gear

Footwear

Always wear closed toe footwear. Sturdy over-the-ankle boots with non-slip soles offer more protection and allow you to plant your foot properly on footrest.

Avoid long shoelaces that can be tangled in the accelerator or brake pedals.

For winter riding conditions, rubber soled boots with either a nylon or leather uppers, with removable felt liners are best suited.

Avoid rubber boots. Rubber boots may get trapped behind or between pedals, impairing the proper operation of brake and accelerator pedals.

Gloves

Full-fingered gloves protect hands from the wind, sun, heat, cold and flying objects. Gloves that fit snugly will improve grip on the steering wheel and help reduce hand fatigue. Sturdy, reinforced motorcycle or ATV gloves help protect hands better in the event of an accident or a rollover. If gloves are too bulky, it may be difficult to operate the controls.

For winter riding conditions, hands should be protected by a pair of snowmobile gloves which have sufficient insulation and allow use of thumbs and fingers for operation of controls.

Jackets, Pants and Riding Suits

Wear a jacket or a long sleeved shirt and long pants, or a full riding suit. Quality ATV-type protective gear will provide comfort, and it can help you avoid being distracted by adverse environmental elements. In case of a crash, good quality protective gear made of sturdy material may prevent or reduce injury.

In cool-weather riding, protect yourself against hypothermia. Hypothermia, a condition of low body temperature, can cause loss of concentration, slowed reactions and loss of smooth, precise muscle movement. In cool conditions, proper protective gear like a windproof jacket and insulated layers of clothing are

essential. Even while riding at moderate temperatures, you can feel very cold due to the wind.

Protective gear that is appropriate for cold-weather riding may be too hot when stopped. Dress in layers so that clothing can be removed as desired. Topping the protective gear with a windproof outer layer can prevent cold air from reaching the skin.

Rain Gear

If you must ride in wet weather, a rain suit or a waterproof riding suit is recommended. On long rides, it is a good idea to carry rain gear. A dry rider will be much more comfortable and alert.

Hearing Protection

Long-term exposure to wind and engine noise when riding can cause permanent hearing loss. Properly worn hearing protective devices such as earplugs can help prevent hearing loss. Check local laws before using any hearing protective devices.

Required Equipment

As the owner of an off-road vehicle, you are responsible for ensuring that all required safety equipment is aboard. Check your local regulations about requirements.

This could include:

– First aid kit
– Sling: to help a defective or stuck vehicle
– Tool kit
– Phone in a watertight compartment designed for this application
– Current local map.

For a long ride, you should also include the following:

– Snack
– Flashlight.

SAFE OPERATION - RESPONSIBILITIES

This is a high performance off-road vehicle. Operators must be responsible and use care to avoid rollovers, tipovers, collisions, and other accidents. Even with vehicle safety features (such as protective structure, seat belts, side nets, doors) and protective gear (such as a helmet), there is always a risk of injury or death in these accidents. To reduce the risk of serious injury or death, follow the rules in this section.

Owner - Be Responsible

Read this Operator's Guide and watch the *Safety Video*. Refer to the link at the beginning of the Operator's Guide.

Always inspect and confirm the safe operating condition of your vehicle prior to ride. Always follow the maintenance schedule described in this Operator's Guide.

Never allow anyone to operate your vehicle unless they are responsible and can be trusted with a high performance vehicle. Consider supervising new or young operators and setting rules and limits (e.g., whether they can carry passengers, what they may do with the vehicle, where they may ride, etc.) for anyone using your vehicle.

If equipped with optional D.E.S.S. keys, select the appropriate key (see *Ignition Switch and Keys*) based on the operator's experience, vehicle use and environment.

Discuss the safety information with anyone who will be using the vehicle. Be sure that all operators and passengers meet the qualifications below and agree to follow the safety information. Help users become familiar with the vehicle.

We encourage you to have an Annual Safety Inspection of your vehicle. Please contact an authorized BRP dealer for further details. Though not required, it is recommended that an authorized BRP dealer performs the preseason preparation of your vehicle. Each visit to your authorized BRP dealer is a great opportunity for your dealer to verify if your vehicle is included in any safety campaign. We also urge you to visit your authorized BRP dealer in a timely manner if you become aware of any safety related campaigns.

See an authorized BRP dealer for available accessories you may require.

Operator - Be Qualified and Responsible

Read this Operator's Guide and watch the *SAFETY video*. Refer to the link at the beginning of the Operator's Guide.

Become completely familiar with the operational controls and the general operation of the vehicle.

Take a training course if available (contact an authorized Can-Am dealer to find out about training course availability as well as on the internet at http://www.rohva.org/), and perform the practice exercises in *Practice Exercises* section. Practice driving in a suitable area free of hazards and feel the response of each control. Drive at low speeds. Higher speeds require greater experience, knowledge and suitable riding conditions.

Be at least 16 years of age.

Be tall enough to be properly seated: back against the backrest with the seat belt fastened, to hold the steering wheel with both hands and still be able to reach the full stroke of brake and accelerator pedals with the right foot and to firmly plant left foot on the footrest.

Have a proper driver's license in accordance with local laws.

Never use this vehicle with drugs or alcohol, or if tired or ill. These slow reaction time and impair judgment.

Carrying Passengers

Only carry one passenger per available seat. All passengers must be properly seated in the cockpit.

The passengers must be tall enough to always be properly seated: back against the backrest with seat belt fastened, holding both handholds, and feet firmly planted on the footrests.

Never carry passengers who has used drugs or alcohol, or is tired or ill. These slow reaction time and impair judgment.

Instruct the passengers to read the vehicle’s safety labels.

Never carry passengers if you judge his ability or judgement insufficient to concentrate on the terrain conditions and adapt accordingly. More specifically for side-by-side vehicles, the passengers must also pay constant attention to the terrain ahead and be able to brace for bumps.

Riding Carefully

– This vehicle handles differently from other vehicles. A collision or rollover can occur quickly, during abrupt maneuvers such as doing sharp turns, acceleration or deceleration and driving on hills or over obstacles, if you fail to take proper precautions.
– Never operate at excessive speeds. Always go at a speed that is proper for the terrain, visibility, and operating conditions, and your experience.
– Never attempt jumps, side slides, donuts or any other stunts.
– Never attempt rapid acceleration or deceleration when performing a sharp turn. This may result in a roll over.
– Never attempt skidding or sliding. If vehicle starts to skid or slide, counter steer in the direction of skidding or sliding. On extremely slippery surfaces, such as ice, go slowly and be very cautious in order to reduce the chance of skidding out of control.
– Always be sure there are no obstacles or people behind the vehicle when you operate in reverse. Pay attention to blind spots. When it is safe to proceed in reverse, go slowly.
– Never exceed the stated load limits for this vehicle. Cargo must be properly secured. Reduce speed, allow for greater braking distance and follow other instructions in *Moving Loads and Doing Work*.
– Always remember that this vehicle is heavy! Its pure weight alone may entrap you should it tip or rollover.

Occupant Restraint System

- This vehicle is designed to carry one driver and up to three (3) passengers, all wearing proper protective gears (refer to *Riding Gear* in this section).
- All occupants must latch the doors or the side nets and wear the seat belts at all times when riding.
- Before riding, everyone aboard should know how to unbuckle their seat belt rapidly. Knowing how to properly detach your seat belt is a crucial skill that can save your life in an emergency situation. In the event of an accident or vehicle malfunction, being able to quickly release your seat belt can help you escape the vehicle and avoid potential hazards such as fire or sinking. Additionally, knowing to quickly release your seat belt can also help you assist others such as children or older persons.

Terrain Condition

- This vehicle is not designed to ride on paved surfaces; if you must shortly use the vehicle on such surfaces, avoid abrupt inputs to steering wheel, accelerator and brake pedals.
- Always go slowly and be extra careful when operating on unfamiliar terrain. Always be alert to changing terrain conditions when operating this vehicle. Take the time to learn how the vehicle performs in different environments.
- Never operate on excessively rough, slippery or loose terrain until you have learned and practiced the skills necessary to control this vehicle on such terrain. Always be especially cautious on these kinds of terrain.
- Never operate this vehicle on hills too steep for the vehicle or your abilities. Practice on small inclines.
- Always follow proper procedures for climbing or going down hills as described in *Riding Your Vehicle*. Check the terrain carefully before you start up or down any hill. Never climb or descend hills with excessively slippery or loose surfaces. Never go over the top of any hill at high speed.
- Never attempt steep hills or side hilling when pulling a trailer.
- Always check for obstacles before operating in a new area. Always follow proper procedures when operating over obstacles as described in *Riding Your Vehicle*.
- Never operate this vehicle in fast flowing water or in water deeper than specified in *Riding Your Vehicle*. Remember that wet brakes may have reduced stopping ability. Test your brakes after leaving water. If necessary, apply them several times to let friction dry out the brakes.
- Always ensure to properly park the vehicle on the flattest terrain section available. Put shift lever in PARK, stop engine and remove key before leaving the vehicle.
- If parking on a slope is inevitable, Placing a large rock or similar object behind a wheel to block it from moving is recommended.
- Never assume that the vehicle will go everywhere safely. Sudden changes in terrain caused by holes, depressions, banks, softer or harder “ground” or other irregularities may cause the vehicle to topple or become unstable. To avoid this, slow down and always observe the terrain ahead. If the vehicle does begin to topple or rollover, the best advice is to immediately steer in the direction of the rollover! Never attempt to prevent a rollover with your arms or legs. You should keep your limbs inside the cage or ROPS (rollover protective structure).

GET FAMILIAR WITH THE VEHICLE

This vehicle may exceed the performance of other vehicles you may have ridden. Take time to familiarize yourself with your new vehicle.

Inexperienced operators may overlook risks and be surprised by vehicle's specific behavior and terrain conditions. Ride slowly. Excessive speed and reckless driving can kill.

Make sure you read and understand the content of this operator's guide to become completely familiar with the controls and operation of this vehicle before embarking on your first trip or taking on a passenger(s).

Take time to practice driving solo in a suitable traffic-free area to become accustomed to the feel and response of each control.

It is very important to inform any operator, regardless of his experience, of the handling characteristics of this vehicle. The configuration, such as vehicle height, width, suspension type, tires type, and type vary from a model to another. The vehicle handling is greatly influenced by these characteristics.

Off-Road Operation

The very nature of off-road operation is dangerous. Any terrain, which has not been specially prepared to carry vehicles, presents an inherent danger where terrain substance, shape and steepness are unpredictable. The terrain itself presents a continual element of danger, which must be knowingly accepted by anyone venturing over it.

An operator who takes a vehicle off-road should always exercise the utmost care in selecting the safest path and keeping close watch on the terrain ahead of him. The vehicle should never be operated by anyone who is not completely familiar with the driving instructions applicable to the vehicle, nor should it be operated on steep or treacherous terrain.

The traction of the tires will vary depending on the surface conditions and the tread pattern.

The traction may be reduced on many surfaces (rock, sand, mud, snow, ice, etc.). Reduce your speed and allow more space to turn.

⚠ WARNING

Never stand behind or near a rotating tire. Debris could be projected causing severe injuries.

Steering

The front wheels are steered by the steering wheel.

Steering behavior will vary depending of the grip of the tires on the ground.

The Dynamic Power Steering (DPS) to reduce the effort to turn the steering wheel.

Riding with passenger(s) or when carrying loads will affect the steering control and vehicle handling. Pay attention and reduce the speed.

Braking

Braking performances may vary suddenly under certain conditions.

Always remember that the vehicle braking distance may be affected when riding with passenger(s) and when loaded with cargo at the rear.

Never jam the brakes. Be sure to use restraint in braking to keep from blocking the wheels in order to avoid surprises that could lead to a loss of control.

Accessories and Modifications

Any modifications or addition of accessories approved by BRP may affect the handling of your vehicle. It is important to take the time to get familiar with the vehicle once modifications are made to understand how to adapt your driving behavior accordingly.

Avoid installing equipment not specifically approved by BRP for the vehicle and avoid unauthorized modifications. These modifications and equipment have not been tested by BRP and may create hazards. For example, they could:

– Create a loss of control and increase risk of crash.
– Cause overheating or short circuits increasing the risk of fire or burn injuries.
– Affect the protection features provided by the vehicle.
– Affect the behavior of the trailer when the vehicle is transported.
– Cause a risk of losing objects on the road when transported.

Your vehicle may also become illegal to ride.

See your authorized BRP Off-road dealer for available BRP accessories for your vehicle.

For safety reasons, some BRP accessories must be installed by a BRP dealer but if you decide to install the accessory by yourself, when not required to be done by the dealer, it is important to follow all the instructions carefully and, if applicable, understand all the information on how to use the product or for servicing.

If the accessory has been installed on your vehicle by another person than you, BRP strongly recommends you to read the corresponding instruction sheet as there may be more for information on how to use it safely or for the servicing.

The instruction sheets can be found at this address:

– *HTTPS://INSTRUCTIONS.BRP.COM*

AVOID ACCIDENTS

Avoid Rollovers and Tipovers

Side-by-side vehicles handle differently from other vehicles. Side-by-side vehicles are designed to handle off-road terrain (for example, their wheel base and track width, ground clearance, suspension, drivetrain, tires, etc.), and, as a result, can overturn in situations where vehicles designed for use primarily on paved or smooth terrain may not.

A rollover or other accident can occur quickly during abrupt maneuvers such as sharp turns or hard acceleration or deceleration when turning, or when driving on hills or over obstacles. Abrupt maneuvers or aggressive driving can cause rollovers or loss of control even in flat open areas. If the vehicle rolls over, any part of your body (such as arms, legs, or head) outside of the cockpit can be crushed and trapped by the cage or ROPS or other parts of the vehicle. You can also be injured by impact with the ground, cockpit or other objects.

To reduce the risk of rollovers:

- Use care when turning.
  - Do not turn the steering wheel too far or too fast for your speed and environment. Adjust steering inputs according to your speed and environment.
  - Slow down before entering a turn. Avoid hard braking during a turn.
  - Avoid sudden or hard acceleration when turning, even from a stop or low speed.
- Never attempt donuts, skids, slides, fishtails, jumps, or other stunts. If vehicle starts to skid or slide, steer in the direction of the skid or slide. Never slam the brakes and lock the wheels.
- Avoid paved surfaces. This vehicle is not designed to operate on paved surfaces and is more likely to roll over. If you must drive on pavement, turn gradually, go slowly, and avoid abrupt acceleration and braking.

This vehicle can roll over sideways or tip over forward or backwards on slopes or uneven terrain.

- Avoid side hilling (driving along the slope rather than up or down a hill). When possible, drive straight up and down inclines rather than across them. If you must side hill, use extreme caution and avoid slippery surfaces, objects, or depressions. If you feel the vehicle start to rollover or slide sideways, steer downhill if possible.
- Avoid steep hills and follow procedures in this guide for climbing and descending hills.
- Sudden changes in terrain such as holes, depressions, banks, softer or harder ground or other irregularities may cause the vehicle to tip or become unstable. Observe the terrain ahead and slow down in areas of uneven terrain.

This vehicle will handle differently when carrying or pulling a load.

- Reduce speed and follow instructions in this manual for carrying cargo or pulling a trailer.
- Avoid hills and rough terrain.
- Allow more distance to stop.

Be Prepared in Case of Rollover

- Fasten side nets and fasten seat belt to help you avoid sticking out arms or legs.

– Never grab the cage or ROPS while riding. Hands can be crushed between the cage or ROPS and the ground in a rollover. Keep hands on the steering wheel or handholds.
– Never try to stop a rollover using your arms or legs. If you think that the vehicle may tip or roll, the driver should keep both hands on the steering wheel and the left foot firmly planted on the footrest. The passengers should keep both hands on the handhold and both feet firmly planted on the floor.

Avoid Collisions

This vehicle can reach high speeds. At higher speeds, there is an increased risk of losing control, particularly in challenging off-road conditions, and the risk of injury in a collision is greater. Never operate at excessive speeds. Always go at a speed that is proper for the terrain, visibility, and operating conditions, and your experience. Consider reserving use of the performance key for situations in which full speed and acceleration capability are appropriate.

Never operate this vehicle on any public street, road or highway, even dirt or gravel ones. Riding your vehicle on roads or highways could result in a collision with another vehicle. This vehicle is not designed for operation on roads. For example, it does not meet motor vehicle safety standards that apply to automobiles. In many jurisdictions it is not legal to operate this vehicle on public roads.

This vehicle does not have the same kind of protection for collisions as a car; for example, there are no air bags, the cockpit is not fully enclosed, and it is not designed for collisions with other vehicles. Therefore, it is particularly important to fasten seat belts and side nets and wear an approved helmet.

RIDING YOUR VEHICLE

Practice Exercises

Before you go out for a ride, it is very important to familiarize yourself with the handling of your vehicle by practicing in a controlled environment. If possible, it is also a very good idea to take a more formal training course to sharpen your skills and increase your knowledge of the vehicle.

Find a suitable area to practice and perform the following exercises. It should be at least 45 m x 45 m (150 ft x 150 ft) free of obstacles like trees and rocks. Once you've selected a suitable permitted location, proceed with the following exercises.

Turning Exercises

Turning is one of the most frequent causes of accidents. It is easier for the vehicle to lose traction or rollover if you turn too sharply, or go too fast. Slow down when you approach a turn.

- First learn how to perform slight right turns at very low speeds. Release the throttle before turning and slowly reapply the throttle when turning.
- Repeat turning exercise but this time maintain the throttle at the level while turning.
- Finally, repeat turning exercise while accelerating slowly.
- Practice exercises turning on the other side.

Note how your vehicle reacts in these different exercises. We recommend releasing the throttle before entering a turn to help initiate directional change. You will feel the lateral force increasing with the speed and with your steering input. The lateral force should be maintained as low as possible to make sure it does not cause the vehicle to roll over.

U Turn Exercises

Practice doing U turns.

- Accelerate slowly and while remaining at low speed, then gradually turn the steering wheel to the right until you have completed the U turn.
- Repeat U turn exercise with different steering inputs and always at a very low speed.
- Repeat U turn exercise on the other side.

As mentioned before in this guide, do not ride on paved surfaces as the vehicle behavior will not be the same, increasing the risk of rollover.

Braking Exercises

Practice braking to get familiar with the brake response.

- Do it at low speed first, then increase the speed.
- Practice braking in straight line at different speeds and different braking force.
- Practice emergency braking; optimal braking is obtained in straight line, with high force applied, without locking the wheels.

Remember, braking distance depends on vehicle speed, load and the type of surface. Also, the tires and brakes conditions play a major role.

Reverse Exercises

The next step involves using the reverse.

– Install 1 cone marker on both sides of the vehicle beside each rear wheel. Move the vehicle forward until you can see the cone markers, then stop the vehicle. Acknowledge the distance required to see obstacles behind you.
– Learn how the vehicle handles itself in reverse and reacts with steering inputs.
– Always perform this reverse exercise at slow speeds.

Emergency Engine Stopping Exercise

Learn how to stop your engine quickly in an emergency situation.

– While running at low speed, simply turn the key to the off position.

This is to familiarize you with the vehicle's reaction when the engine is turned off while driving and to develop this reflex.

It is also important to be able to stop and exit the vehicle quickly.

– Immobilize the vehicle.
– Detach the seat belt and the net to exit the vehicle.

Off-Road Operation

The very nature of off-road operation is dangerous. Any terrain, which has not been specially prepared to carry vehicles, presents an inherent danger where terrain substance, shape and steepness are unpredictable. The terrain itself presents a continual element of danger, which must be knowingly accepted by anyone venturing over it.

An operator who takes a vehicle off-road should always exercise the utmost care in selecting the safest path and keeping close watch on the terrain ahead of him. The vehicle should never be operated by anyone who is not completely familiar with the driving instructions applicable to the vehicle, nor should it be operated on steep or treacherous terrain.

General Riding Techniques

General Driving Tips

Care, caution, experience and driving skill are the best precautions against the hazards of vehicle operation.

Whenever there is the slightest doubt that the vehicle can safely negotiate an obstacle or a particular piece of terrain, always choose an alternate route.

In off-road operation, power and traction, not speed, are important. Never drive faster than visibility and your own ability to select a safe route permit. Always go slowly and be extra careful when operating on unfamiliar terrain. Always be alert to changing terrain conditions when operating this vehicle. Be especially cautious on excessively rough, slippery, icy or loose terrain.

Constantly watch the terrain ahead for sudden changes in slopes or obstacles, such as rocks or stumps, that may cause loss of stability, resulting in tip over or rollover.

Never operate the vehicle if the controls do not function normally. See an authorized Can-Am Off-road dealer.

To maintain proper control it is strongly advised that you keep your hands on the steering wheel and within easy reach of all controls. The same holds true for your feet. To minimize the possibility of any leg or foot injury, keep your left foot on the footrest and right foot on the floor at all times. Staying completely within the cockpit will also help keep you from striking objects outside the vehicle.

Watch for and avoid branches and other objects that could enter the passenger compartment and strike you or your passengers.

Operating in Reverse

When operating in reverse, check that the path behind the vehicle is free of people or obstacles. Pay attention to blind spots. When it is safe to proceed in reverse, go slowly and avoid sharp turns.

⚠ WARNING

Steering inputs in reverse operation increase the risk of rollover.

NOTE:
In reverse operation, the engine RPM is limited thus limiting the vehicle reverse speed.

⚠ WARNING

When driving downhill in reverse, gravity can increase the vehicle speed above safe reverse speed.

Crossing Roads

If you have to cross a road, ensure to have complete visibility on both sides for incoming traffic and decide on exit point on other side of road. Drive in a straight line toward that point. Do not make sharp direction changes or abrupt accelerations as it may result in a rollover situation. Do not travel on sidewalks or bicycle trails as they are designated specifically for those uses.

Riding on Paved Surfaces

Avoid paved surfaces. This vehicle is not designed to operate on paved surfaces and is more likely to roll over. If you must drive on pavement, turn gradually, go slowly, and avoid abrupt acceleration and braking.

Shallow Water Crossing

Water can be a unique hazard. If it is too deep the vehicle may “float” and topple. Check the water depth and current before you attempt to cross any water. Water depth should not exceed the center of the wheels for vehicle to safely cross the obstacle. Beware of slippery surfaces such as rocks, grass, logs, etc., both in the water and on its banks. A loss of traction may occur. Do not attempt to enter the water at high speed.

Water will affect the braking ability of your vehicle. Make sure you dry the brakes by applying them several times after the vehicle leaves the water.

Mud or marsh lands may be encountered near water. Be prepared for sudden “holes” or changes in depth. Similarly so, be watchful of hazards such as rocks, logs, etc., partially covered by vegetation.

Riding on Snow or Ice

When performing pre-ride inspection, pay special attention to locations on the vehicle where snow and/or ice accumulations may obstruct visibility of the tail lamp, clog ventilation openings, block the radiator and fan, and interfere with the movement of controls.

Before starting with your vehicle, check the steering, accelerator and brake pedals for interference free operation.

Whenever this vehicle is ridden on a snow covered drive path, the tire grip is generally reduced causing the vehicle to react differently to control inputs from the operator. On low grip surfaces, the steering responses are not as crisp and precise, stopping distances are lengthened and acceleration is also affected. Slow down and be gentle on the accelerator. This will only result in spinning of the tires and possibly in an over steering slide of the vehicle. Avoid hard braking. This will possibly result in a straight line slide of the vehicle. Again, the best advice is to safely reduce speed in anticipation of a maneuver to give yourself time and distance in order to keep control of the vehicle.

As you drive your vehicle over a loose snow covered surface, snow dust will be picked up in the wake turbulence of the moving vehicle and transported to contact and accumulate or melt on some exposed components including rotating parts like brake discs. Water, snow or ice may affect the response time of the brake system of your vehicle. Even when not required to reduce vehicle speed apply brakes frequently to prevent ice or snow accumulation and to dry brake pads and discs. While doing so in low risk driving situations you will test for grip level and keep yourself alerted to how the vehicle reacts to your control inputs. Always keep brake and accelerator pedals and floor boards free of snow and ice. Frequently wipe snow off seat, steering wheel, headlights and tail lamps.

The depth of the snow cover may hide rocks, tree stumps or other objects and if it is wet may totally impede the drivability as the vehicle becomes bogged down or completely looses traction in slushy snow. Look far ahead and always be watchful of any visible clues that might indicate the presence of such obstacles. In doubt steer clear. Avoid driving on any frozen waterways before checking that the ice will safely support the vehicle, its riders and its load of cargo.

At the end of each ride it is a good practice to clean the vehicle and all moving components (brakes, steering components, drivelines, controls, radiator fan etc.) from any snow or ice accumulations. Wet snow will turn to ice during the shut down period and become more difficult to remove at the next pre-ride inspection.

Riding on Sand

Sand and riding on sand dunes is another unique experience but there are some basic precautions that should be observed. Wet, deep or fine sand may create a loss of traction and cause the vehicle to slide, drop off or become “bogged” down. If this occurs look for a firmer base. Again, the best advice is to slow down and be watchful of the conditions.

When riding in sand dunes it is advisable to equip the vehicle with an antenna type safety flag. This will help make your location more visible to others over the next sand dune. Proceed carefully should you see another safety flag ahead.

Riding on Gravel, Loose Stones or Other Slippery Surfaces

Riding on loose stones or gravel is very similar to riding on ice. They will affect the steering of vehicle, possibly causing it to slide and tip over especially at high speeds.

In addition, braking distance may be affected.

Remember that rapid accelerations or sliding may cause loose stones to be ejected rearwards into the path of another rider's way. Never do it deliberately.

During a slide or a skid, counter steer may help to regain the control. Never jam the brakes and lock the wheels.

Crossing Obstacles

It is a good practice to use the low range (L) when crossing obstacles.

Obstacles on the “trail” should be traversed with caution. This includes rocks, fallen trees, and depressions. You should avoid them whenever possible.

Remember that some obstacles are too large or dangerous to cross and should be avoided.

As a guideline, never attempt to cross an obstacle higher than the ground clearance of the vehicle. Small rocks or small fallen trees may be safely crossed - approach obstacle at low speed and as much as possible at a right angle. Adjust speed without losing momentum and do not accelerate abruptly.

Passengers must grasp handholds firmly and brace feet on the floor.

Hold steering firmly without closing your fists around it and proceed. Be aware that the obstacle may be slippery or may move while crossing.

Hill Driving Conditions

When driving on hills or slopes, two things are highly important: be prepared for slippery surfaces or terrain variations and obstacles and brace yourself properly inside vehicle. If you climb or descend a hill that is too slippery or has too loose a surface, you can lose control. If you go over the top of a hill at high speed, you may not have time to prepare for the terrain on the other side. Avoid parking on a slope. Always put the shift lever in PARK when stopped or parked, especially on an incline, to avoid rolling. If you must park on a steep incline, block the wheels using rocks or bricks.

Uphill Driving

Use the low range (L) for uphill driving.

Due to its configuration, this vehicle has very good traction even while climbing, so much so that tip over is possible before traction is lost. For example, it is common to encounter terrain situations where the top of the hill has eroded to a point that the hill peak rises very sharply. This vehicle is not designed to negotiate such a condition. Take an alternate route.

It is also wise to know the terrain condition on the other side of the hill or bank. All too often there exists a sharp drop-off that is impossible to negotiate or descend.

If you feel that the slope is getting too steep to climb, apply brakes to immobilize vehicle. Put shift lever in reverse (R), and back down the hill, barely releasing brakes to remain at low speed. Do not attempt to turn around. Never coast down hill while vehicle is in neutral. Do not perform hard braking as it increases the risk of tipover.

Downhill Driving

This vehicle can climb steeper slopes than it can descend safely. Therefore, it is essential to assure that a safe route exists to descend a slope before you climb it.

Decelerating while negotiating a slippery downhill slope could “toboggan” the vehicle, causing it to slide. Maintain steady speed and/or accelerate slightly to regain control. Never slam brakes and lock the wheels.

Side Hilling

Whenever possible, side hilling (driving across a slope rather than up or down it) should be avoided. If necessary, do so with extreme caution. Side hilling on steep inclines could result in rollover. In addition, slippery or unfirm surfaces could result in uncontrollable side sliding. Avoid all objects or depressions that will intensify the raising of one side of the vehicle higher than the other, thus causing rollover. If you feel the vehicle start to rollover or slide sideways, steer downhill if possible.

⚠ WARNING

Be careful when loading and transporting liquid reservoirs. They can affect vehicle stability when side hilling by pulling downhill and increasing the risk of a rollover.

Drop-Offs

This vehicle is not designed to negotiate drop-offs. It will “bottom-out” and usually stop if either the front or rear wheels are driven over a drop-off. If the drop is sharp or deep, the vehicle will nose dive and tip over.

Avoid negotiating drop-offs. Reverse and select an alternate route.

Recreational, Group and Distance Riding

Respect the rights and limitations of others. Stay away from areas designated for other types of off road use. This includes snowmobile trails, equestrian trails, cross country ski trails, mountain bike trails, etc. Never assume there are no other users on the trail. Always stay to the right of the trail and do not zig zag to one side of the trail then the other. Be prepared to stop or pull off to the side if another trail user appears in front of you.

Join a local side-by-side vehicle club. It will provide you with a map and advice or inform you where you can ride. If a club does not exist in your area, help to start one. Group riding and club activities provide a pleasurable, social experience. Never use this vehicle with drugs or alcohol, or tired or ill.

Always keep a safe distance from other riders. Your judgment of speed, terrain conditions, weather, mechanical condition of your vehicle and the “trust in judgment” you have in others around you will help you make a better choice of appropriate safe distance. This vehicle, like any other motorized vehicle, cannot stop “on a dime”.

Before you ride, tell someone where you are planning to travel and your expected time of return.

Depending on the length of your ride, carry additional tools or emergency equipment. Find out where you can get additional gasoline. Be prepared for the possible conditions you may encounter. An emergency first aid kit should always be a consideration.

Environment

One of the benefits of this vehicle is that it can take you off the beaten path away from most communities. However, you should always respect nature and the rights of others to enjoy it. Do not ride in environmentally sensitive areas. Do not drive over forest crops or shrubs, nor cut down trees or take down fencing, nor spin your wheels and destroy the terrain. “Tread Lightly”.

This vehicle can cause OHV wildfires if debris builds up near the exhaust or other engine hot spots and ignites then falls off into dry grass. Avoid riding in wet areas, through muskeg or tall grass, where debris can build up. Should you ride in those areas, inspect and remove all debris from your engine and hot spots. Refer to *Vehicle Care* for details.

Chasing wildlife is in many areas illegal. Wildlife can die of exhaustion after being chased by a motorized vehicle. If you encounter animals on the trail, stop and observe quietly and with caution. It will be one of the better memories of your life.

Observe the rule “what you take in, carry out”. Do not litter. Do not start campfires unless you have permission to do so, and then only away from dry areas. The hazards you may create on the trail may cause injury to others or yourself, even at a later date.

Respect farm lands. Always obtain the permission of the landowner before riding on private land. Respect crops, farm animals and property lines.

Finally, do not pollute streams, lakes or rivers and do not modify the engine or exhaust system, or remove any of its components as it will alter the vehicle emissions.

MOVING LOADS AND DOING WORK

Working with Your Vehicle

Your vehicle can help you perform a number of different LIGHT tasks ranging from snow removal to pulling wood or carrying cargo. A variety of accessories are available from your authorized Can-Am Off-road dealer. To prevent possible injury, follow the instructions and warnings that accompany the accessory. Always respect the load limits of the vehicle. Overloading the vehicle can overstress the components and cause failure. Avoid overexerting yourself if you lift or pull heavy loads or manually push the vehicle.

⚠ WARNING

Mounted machinery must be lowered on the ground before leaving the vehicle.

Carrying Loads

⚠ WARNING

Make sure all accessories, cargo and loose objects inside the vehicle are properly secured, or remove it to prevent from failing on the road and creating a hazard for following vehicles.

Any load carried on the vehicle will affect the handling, stability and braking distance of the vehicle. Do not exceed the payload limits of the vehicle, including the weight of operator, passengers, cargo, accessories and trailer tongue weight.

Always be aware that the cargo may slide or fall off and cause an accident.

Maximum Payload Limit of the Vehicle	
481 kg (1,060 lb)	Includes occupants, cargo, tongue weight and added accessories

The following is an example of suitable total vehicle payload distribution:

Example of Suitable Payloads (adjust according to your model load limit)				
Operator and passenger	Cargo box load	Accessories	Tongue weight	Total vehicle payload
350 kg (772 lb)	23 kg (50 lb)	40 kg (88 lb)	68 kg (150 lb)	481 kg (1,060 lb)

To reduce the risk to lose control or the load carried, follow these recommendations.

Vehicle Settings When Carrying Load

When carrying heavy loads or passengers, readjust suspension accordingly.

When carrying heavy loads in cargo box or pulling a loaded trailer, operate with the shift lever in L (low range).

⚠ WARNING

Must use LOW GEAR if total payload is greater than 226 kg (500 lb).

Loading the Cargo Box

Ensure no cargo protrudes outside the box and that cargo will not interfere with your visibility or control of the vehicle. Loads that protrude sideways can get snagged or caught in bush, branches or other obstacles.

Avoid covering and obstructing the brake lights with the cargo.

Load cargo as low as possible – a higher load can raise the vehicle's center of gravity, which can reduce stability.

Objects that are higher than the walls of the cargo box may affect visibility for the driver and may act as projectiles in case of an accident.

Position cargo toward the front and center of the cargo box and as evenly distributed as possible.

Secure the load to the tie down hooks inside cargo box. Use only the tie down hooks on the bottom of the cargo box; do not secure cargo to the cage or other part of the vehicle.

If it is not properly secured, a load may slide or fall off, possibly striking occupants or bystanders; or it may shift during riding, affecting the handling of the vehicle.

Maximum Cargo Box Loads		
Cargo box	91 kg (200 lb)	Evenly distributed and safely secured. Loaded as low as possible to reduce height of center of gravity.

Operating While Carrying a Load

Reduce your speed when carrying cargo and turn gradually. Avoid hills and rough terrain. Allow more distance for braking. This vehicle may require additional stopping distance if carrying heavy loads, especially on inclined surfaces.

Hauling a Load

NOTICE

A BRP approved rear hitch must be properly installed on the vehicle for hauling trailers.

Never pull a load by attaching it to the cage or any other accessories; this can cause the vehicle to tip over. Use only the trailer hitch (if installed) or winch (if installed) to pull a load.

In an emergency situation, use the recovery hook to recover a stuck vehicle.

When pulling loads with a chain or cable, ensure that there is no slack before starting and maintain tension while pulling.

When pulling loads with a chain or cable, be sure to brake progressively. The inertia of the load could lead to an impact.

When hauling a load, respect the maximum hauling capacity. See *Pulling a Trailer* below.

⚠ WARNING

A slack in the chain or cable can cause it to break and snap back.

When pulling another vehicle, be sure that someone is controlling the pulled vehicle. They must brake and steer to prevent the vehicle from going out of control.

Before pulling loads with a winch, refer to the winch manufacturer's instructions.

Reduce your speed when hauling a load and turn gradually. Avoid hills and rough terrain. Never attempt steep hills. Allow more distance for braking, especially on inclined surfaces and when a passenger is on board. Be careful not to skid or slide.

Pulling a Trailer

NOTICE

A BRP approved rear hitch must be properly installed on the vehicle for hauling trailers.

Riding this vehicle with a trailer substantially increases the risk of toppling, especially on inclined slopes. If a trailer is used behind the vehicle make sure that its hitch is compatible with the one on the vehicle. Make sure the trailer is horizontal with the vehicle. (In some instances a special extension may have to be installed on the vehicle hitch). Use security chains or cables to secure the trailer with the vehicle.

Reduce your speed when pulling a trailer and turn gradually. Avoid hills and rough terrain. Never attempt steep hills. Allow more distance for braking, especially on inclined surfaces and when a passenger is on board. Be careful not to skid or slide.

Improperly loading a trailer may cause loss of control.

Always make sure load is evenly distributed and safely secured on the trailer; an evenly balanced trailer is easier to control.

Always put the shift lever to L (low range) for hauling a trailer – in addition to providing more torque, operating in low range helps account for the increased load on the rear tires.

When stopped or parked, block the vehicle and trailer wheels from possible movement.

Use caution when disconnecting a loaded trailer; it or its load may topple on you or others.

When hauling a trailer, respect the maximum tongue weight and towing capacity indicated on the label affixed to the hitch.

Make sure there is at least some weight on the tongue.

IMPORTANT ON-PRODUCT LABELS (CANADA/UNITED STATES)

Safety Hang Tag

This vehicle comes with a hang tag and labels containing important safety information.

Any person who rides this vehicle should read and understand this information before riding.

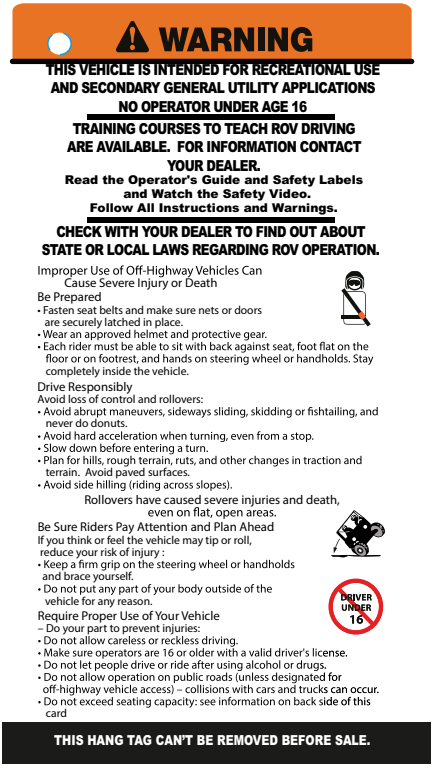

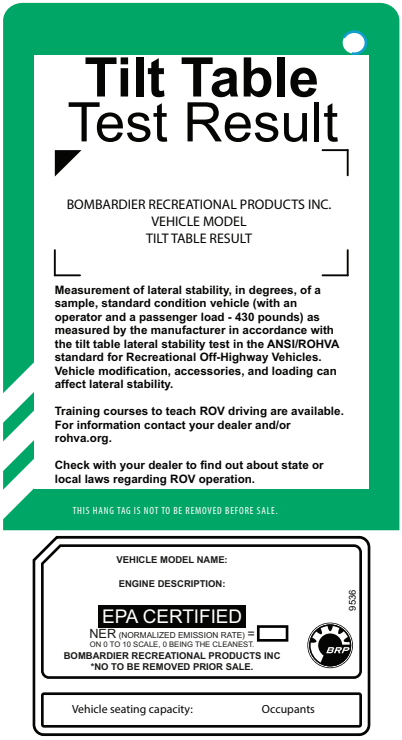

Safety Labels

Read and understand all the safety labels on your vehicle.

These labels are affixed to the vehicle for the safety of the operator, passengers or bystanders.

The following labels are on your vehicle, and they should be considered permanent parts of the vehicle. They need to be clean and visible at all times. If missing or damaged, they need to be replaced. Safety labels are free of charge. See an authorized Can-Am Off-road dealer.

Upon replacement of parts that have warnings on them, make sure to order (free of charge) the applicable safety warnings if not already installed on the replacement part.

NOTE:
In the event of any discrepancy between this guide and the vehicle, the safety labels on the vehicle have precedence over the labels in this guide.

General Warning Label

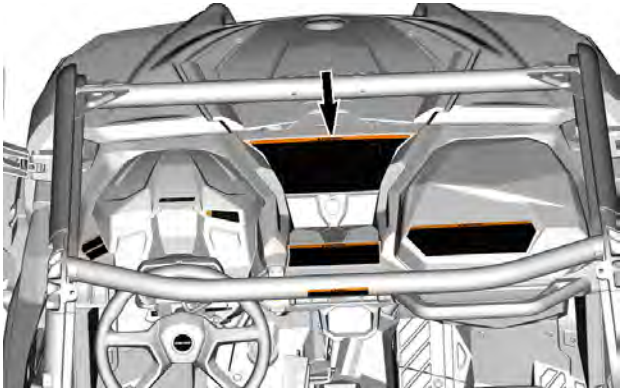

Passenger Warning Label

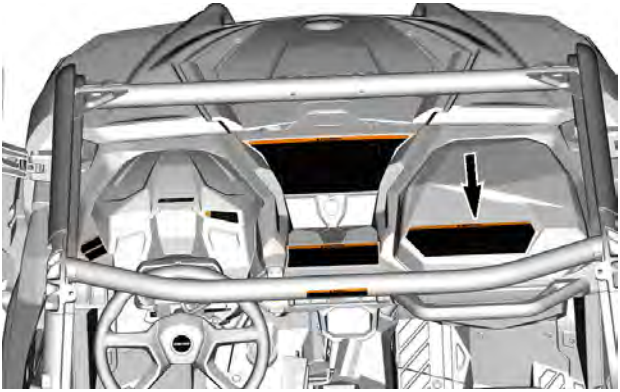

Rear Left Passenger Warning Label

Rear Right Passenger Warning Label

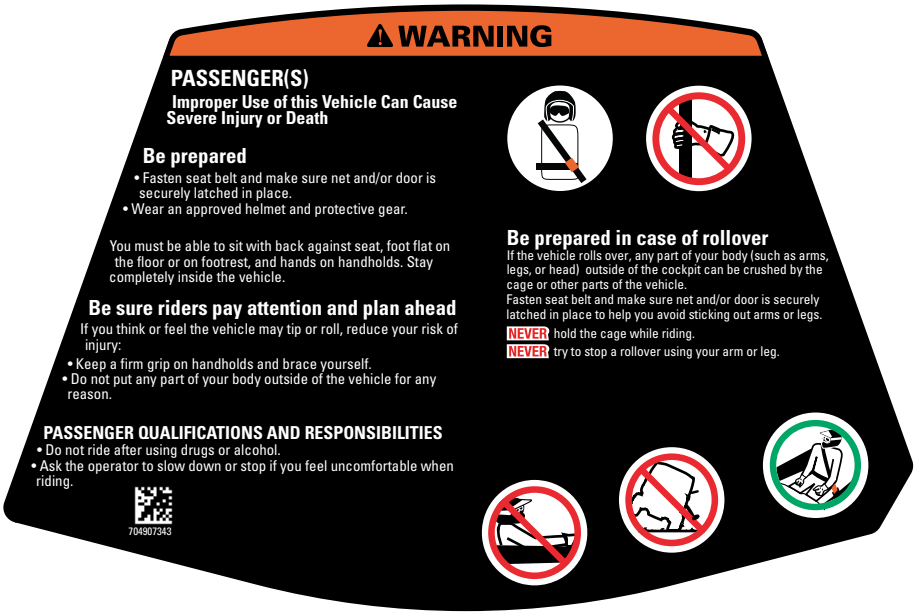

Tire Pressure and Maximum Load — Warning Label

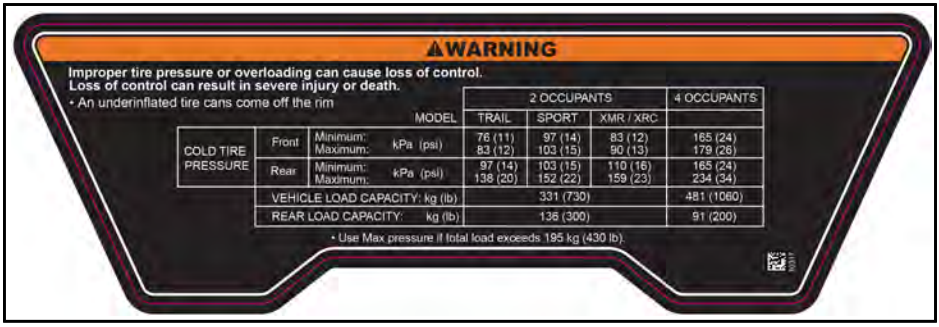

⚠WARNING

Improper tire pressure or overloading can cause loss of control.
Loss of control can result in severe injury or death.
• An underinflated tire cans come off the rim

			2 OCCUPANTS			4 OCCUPANTS
		MODEL	TRAIL	SPORT	XMR / XRC	
COLD TIRE PRESSURE	Front	Minimum: Maximum: kPa (psi)	76 (11) 83 (12)	97 (14) 103 (15)	83 (12) 90 (13)	165 (24) 179 (26)
	Rear	Minimum: Maximum: kPa (psi)	97 (14) 138 (20)	103 (15) 152 (22)	110 (16) 159 (23)	165 (24) 234 (34)
	VEHICLE LOAD CAPACITY: kg (lb)		331 (730)			481 (1060)
	REAR LOAD CAPACITY: kg (lb)		136 (300)			91 (200)

• Use Max pressure if total load exceeds 195 kg (430 lb).

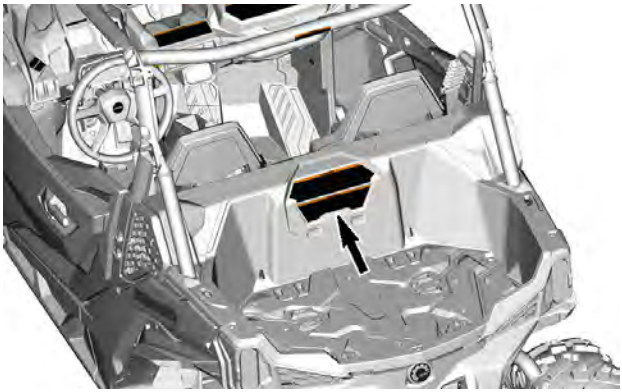

Overload – Warning Label

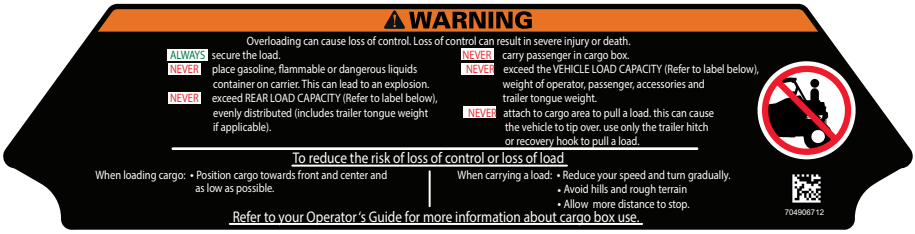

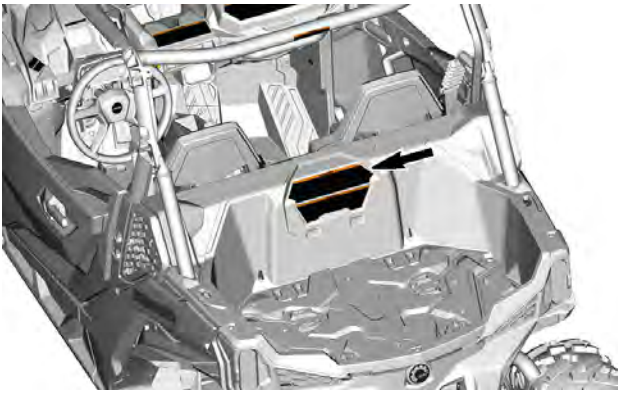

2WD/4WD Selection – Warning Label

Non-SAS	SAS Equipped
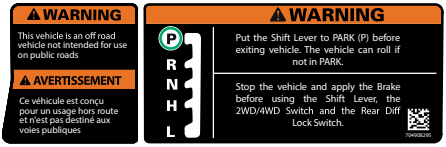	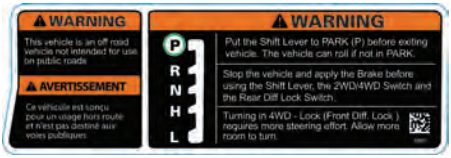

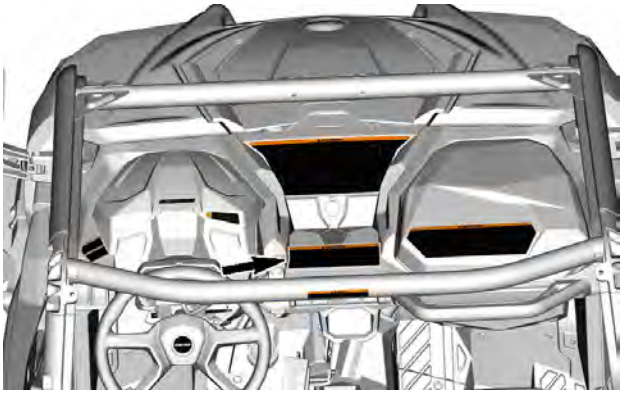

Half Door — Warning Labels

⚠ WARNING

Do NOT put your arm outside of the vehicle, there is a risk of SEVERE INJURY.

LH Side	RH Side
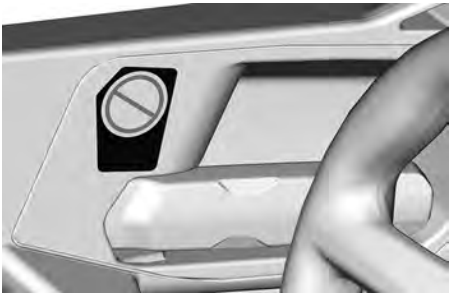	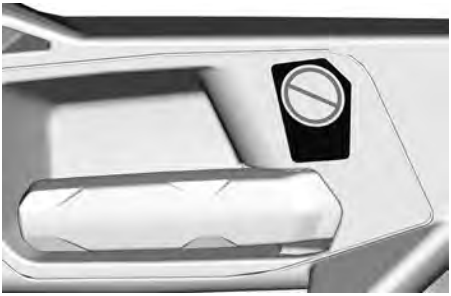

Rear Door — Warning Labels

⚠ WARNING

Do NOT put your arm outside of the vehicle, there is a risk of SEVERE INJURY.

LH Side	RH Side
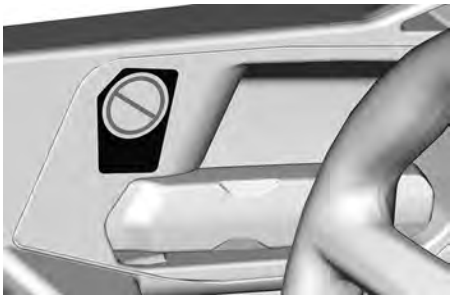	

Rollover — Warning Labels

LH side

RH Side

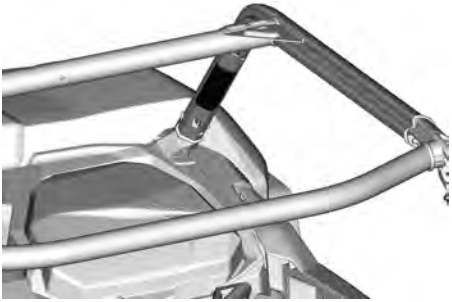

Exhaust — Hot Part Pictogram

⚠ CAUTION
Do not touch when hot.

LH Side	RH Side
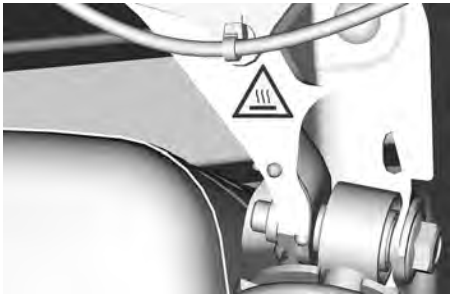	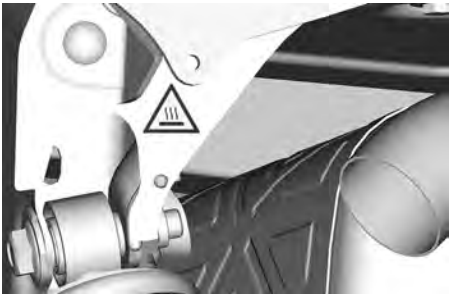

Pulling a Load Using the Cage – Warning Label

⚠ WARNING

NEVER attach to the cage to pull a load.This can cause the vehicle to tip over. Use only the trailer hitch to pull a load.

8188

Winch Installation - Warning Label

⚠ WARNING

Always use the battery post to ground the winch. Doing otherwise may induce an undesired power steering signal resulting in an unintended steering input. In certain circumstances, some unintended steering input could lead to a loss of vehicle control increasing the risk of a crash.

704906951

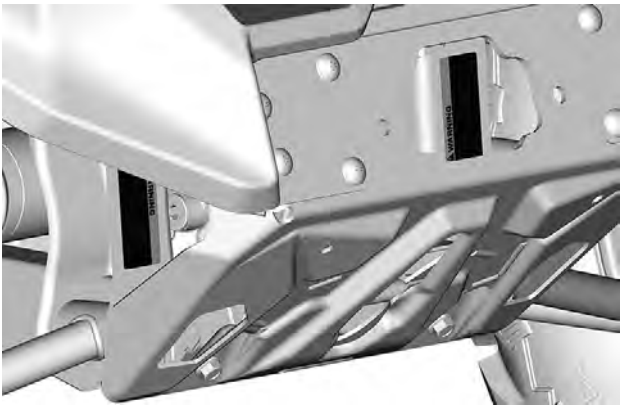

Coolant Hot - Warning Label

⚠ WARNING
Do not open when HOT.

Towing and Tongue Weight - Warning Label

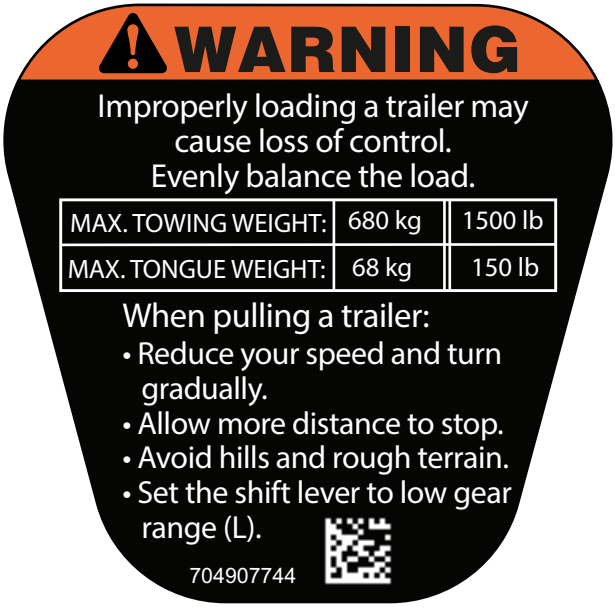

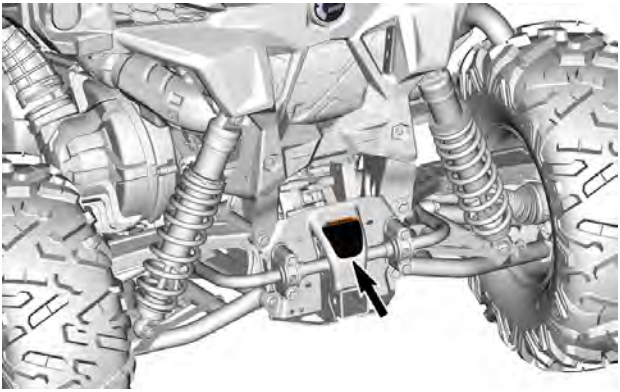

Jump-Start Information – Notice Label

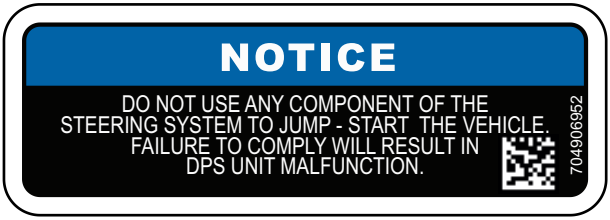

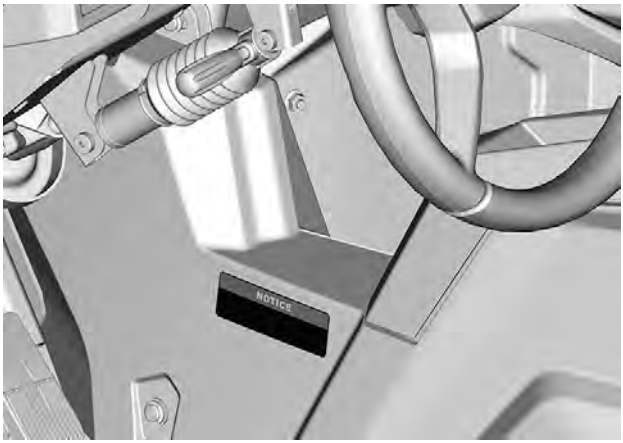

Compliance HangTag

California Proposition 65 Warning - Hang Tag

⚠ **WARNING**. Operating, servicing and maintaining an off-road vehicle can expose you to chemicals including engine exhaust, carbon monoxide, phthalates, and lead, which are known to the State of California to cause cancer and birth defects or other reproductive harm.
To minimize exposure, avoid breathing exhaust, do not idle the engine except as necessary, service your vehicle in a well-ventilated area and wear gloves or wash your hands frequently when servicing your vehicle.

For more information go to www.P65Warnings.ca.gov/products/passenger-vehicle

704906872

IMPORTANT ON-PRODUCT LABELS (COUNTRIES OUTSIDE CANADA AND UNITED STATES)

Read and understand all the safety labels on your vehicle.

These labels are affixed to the vehicle for the safety of the operator, passengers or bystanders.

The following labels are on your vehicle, and they should be considered permanent parts of the vehicle. They need to be clean and visible at all times. If missing or damaged, they need to be replaced. Safety labels are free of charge. See an authorized Can-Am Off-road dealer.

Upon replacement of parts that have warnings on them, make sure to order (free of charge) the applicable safety warnings if not already installed on the replacement part.

NOTE:
In the event of any discrepancy between this guide and the vehicle, the safety labels on the vehicle have precedence over the labels in this guide.

Safety Pictogram

Read and understand all the safety labels on your vehicle.

These labels are affixed to the vehicle for the safety of the operator, passengers or bystanders.

Any person who rides this vehicle should read and understand this information before riding.

The following labels are on your vehicle, and they should be considered permanent parts of the vehicle. They need to be clean and visible at all times. If missing or damaged, they need to be replaced. Safety labels are free of charge. See an authorized Can-Am Off-road dealer.

Upon replacement of parts that have warnings on them, make sure to order (free of charge) the applicable safety warnings if not already installed on the replacement part.

NOTE:
In the event of any discrepancy between this guide and the vehicle, the safety labels on the vehicle have precedence over the labels in this guide.

General Warning Pictogram

⚠ WARNING

- Read and understand all safety labels, locate and read operator's guide. Watch the safety video using the QR code link or visit Can-am web site before operation.
- Always wear an approved helmet and protective gear.
- Always wear ear protection.
- Fasten seat belts and nets.
- Make sure operators are 16 or older with a valid driver's license.
- Do not allow operation on public roads (unless designated for off--highway vehicle access) – collisions with cars and trucks can occur.
- Avoid loss of control and rollovers:
  - Avoid abrupt maneuvers, sideways sliding, skidding or fishtailing, and never do donuts.
  - Avoid hard acceleration when turning, even from a stop.
  - Slow down before entering a turn.
  - Plan for hills, rough terrain, ruts, and other changes in traction and terrain.
  - Avoid paved surfaces.
  - Avoid side hilling (riding across slopes).
- Rollovers have caused severe injuries and death, even on flat, open areas.
- Do not exceed seating capacity: 2 occupants.
- Each rider must be able to sit with back against seat, feet flat on the floor or on footrest, and hands on steering wheel or handholds.
- If you think or feel the vehicle may tip or roll, reduce your risk of injury : Keep a firm grip on the steering wheel or handholds and brace yourself. Do not put any part of your body outside of the vehicle for any reason.
- Always stay completely inside the vehicle.
- Do not let people drive or ride after using alcohol or drugs.

https://can-am.brp.com/off-road/safety
16+
4
max
7645
Patent : www.brp.com/en/about-brp/patents.html
MAX INT

Passenger Warning Label

⚠ WARNING

- Always wear an approved helmet and protective gear.
- Always wear ear protection.
- Fasten seat belts.
- Always latch nets or doors.
- Each rider must be able to sit with back against seat, feet flat on the floor or on footrest, and hands on handholds.
- If you think or feel the vehicle may tip or roll, reduce your risk of injury. Keep a firm grip on handholds and brace yourself. Do not put any part of your body outside of the vehicle for any reason.
- Always stay completely inside the vehicle.
- Do not ride after using alcohol or drugs.

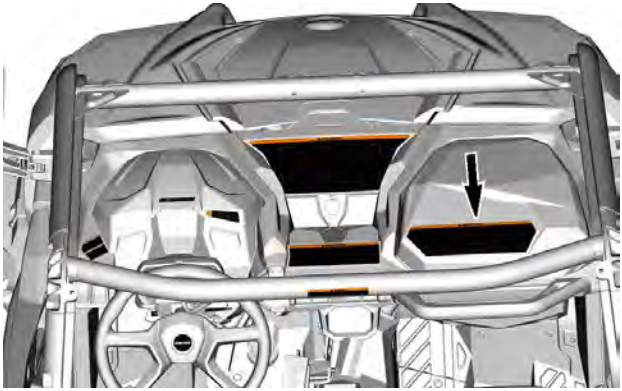

Tire Pressure and Maximum Load - Warning Label

⚠ WARNING

- **Locate and read operator's guide. Improper tire pressure or overloading can cause loss of control, resulting in SEVERE INJURY or DEATH.**
- **Always maintain proper tire pressure as shown.**
- **NEVER exceed the vehicle load capacity, including weight of operator, passenger(s), cargo, accessories and trailer tongue weight if applicable.**
- **Do not overload cargo box.**
- **NEVER carry passenger in cargo box or on tailgate.**
- **NEVER place gasoline, flammable or dangerous liquids container on the carrier. This can lead to an explosion.**

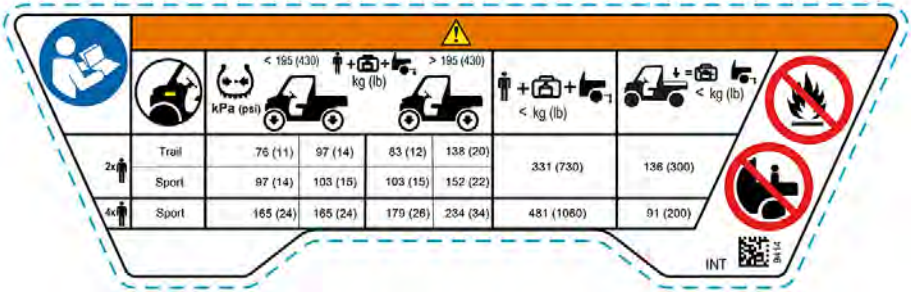

	kPa (psi) < 195 (430)		kPa (psi) > 195 (430)		kg (lb) < kg (lb)	< kg (lb)
2x Trail	76 (11)	97 (14)	83 (12)	138 (20)	331 (730)	136 (300)
2x Sport	97 (14)	103 (15)	103 (15)	152 (22)		
4x Sport	165 (24)	165 (24)	179 (26)	234 (34)	481 (1060)	91 (200)

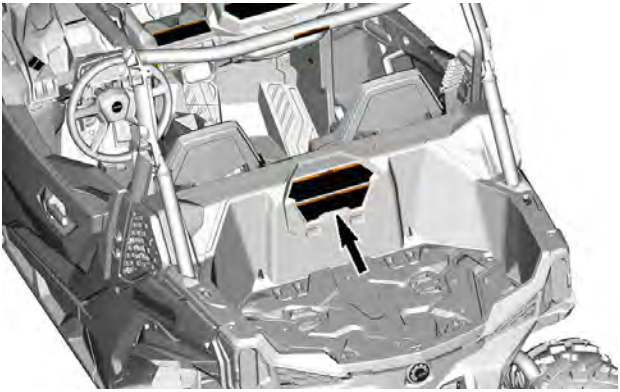

Overload – Warning Label

⚠ WARNING

- **Refer to operator's guide for more details.**
- **NEVER place gasoline, flammable or dangerous liquids container on carrier. This can lead to an explosion.**
- **NEVER carry passenger in cargo box or tailgate.**
- **When carrying a load, Reduce your speed, turn gradually, avoid hills and rough terrain and allow more distance to stop.**

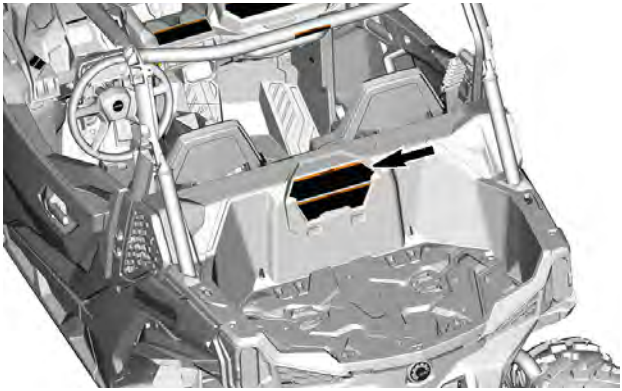

2WD/4WD Selection — Warning Label

⚠ WARNING

- **Stop the vehicle and apply the brake before using the shift lever or the 2WD/4WD switch.**
- **Put the shift lever to PARK (P) before exiting vehicle. The vehicle can roll if not in PARK position.**

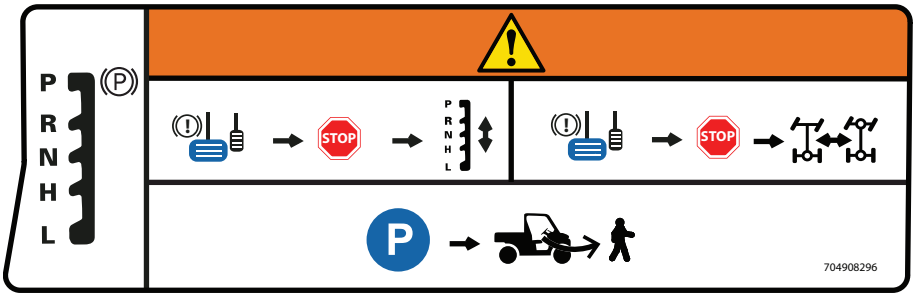

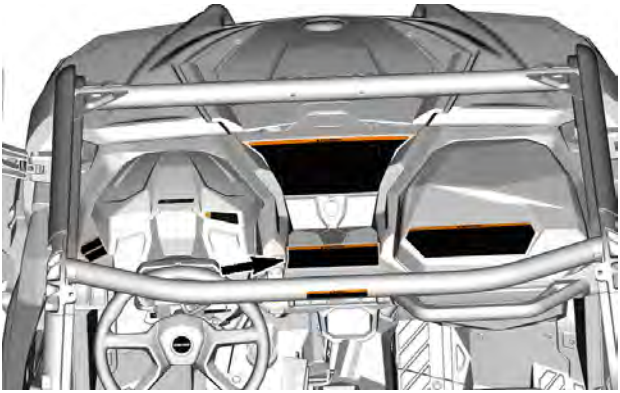

Half Door — Warning Labels

⚠ WARNING

Do NOT put your arm outside of the vehicle, there is a risk of SEVERE INJURY.

LH Side	RH Side
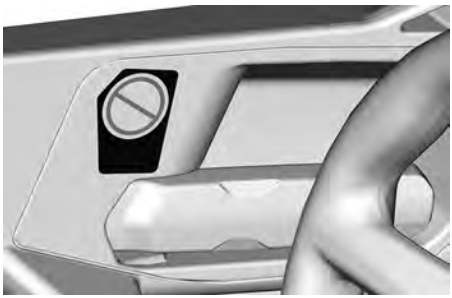	

Rear Door — Warning Labels

⚠ WARNING

Do NOT put your arm outside of the vehicle, there is a risk of SEVERE INJURY.

LH Side	RH Side
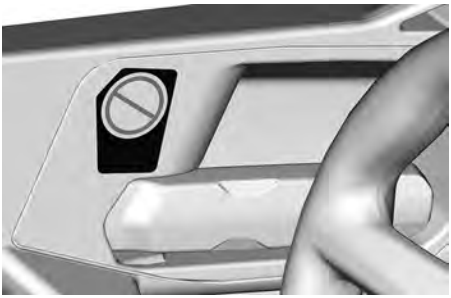	

Rollover - Pictogram

⚠ WARNING

- **If you think or feel the vehicle may tip or roll, reduce your risk of injury. Keep a firm grip on handholds and brace yourself. Do not put any part of your body outside of the vehicle for any reason.**
- **Never hold the cage while riding.**
- **Always latch nets or doors.**
- **Fasten seat belts.**

LH side	RH Side

7690
LH

7691
RH

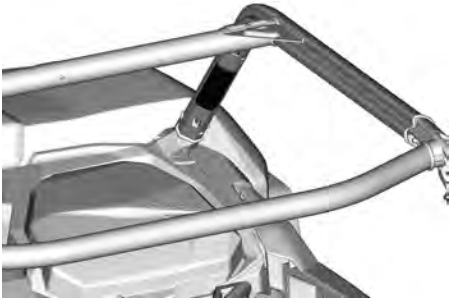

Rear Rollover - Pictogram

LH Side	RH Side

Pulling a Load Using the Cage - Pictogram

⚠ WARNING

Never attach to the cage to pull a load.
This can cause the vehicle to tip over.
Use only the trailer hitch or recovery hook to pull a load.

Towing and Tongue Weights - Pictogram

⚠ WARNING

MAXIMUM towing and tongue weights.
Set the shift lever to LOW (L) gear range when pulling a load.
Reduce your speed and turn gradually.
Avoid hills and rough terrain.
Allow more distance to stop.

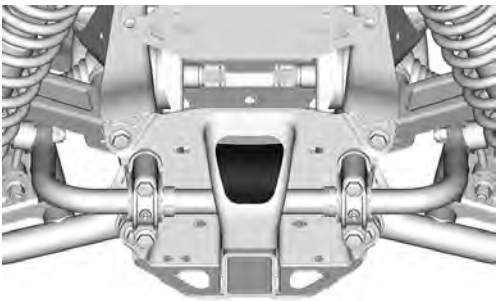

Winch Installation - Pictogram

⚠ WARNING

Never use the frame near the steering column to ground any electrical component such as the winch.
Always use the battery post to ground the winch. Doing otherwise may induce an undesired power steering signal resulting in an unintended steering input.
In certain circumstances, some unintended steering input could lead to a loss of vehicle control increasing the risk of a crash.

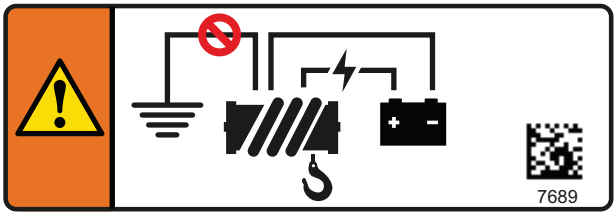

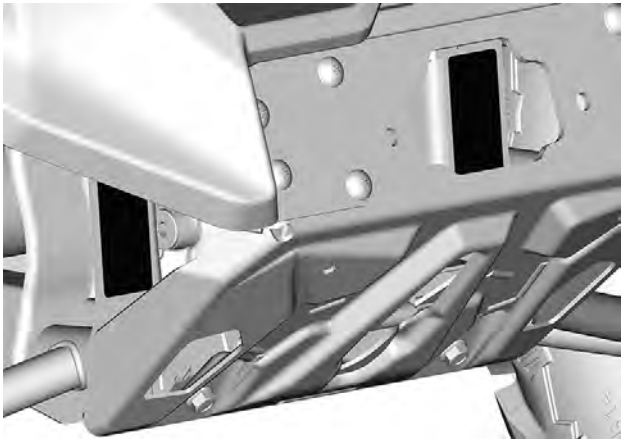

Exhaust — Hot Part Pictogram

⚠ CAUTION

Do not touch when hot.

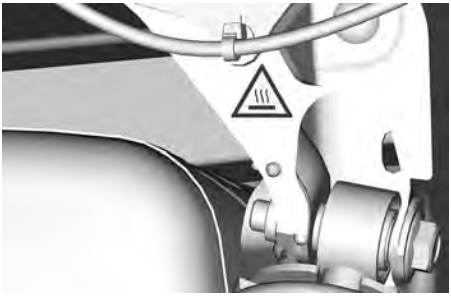

LH SIDE

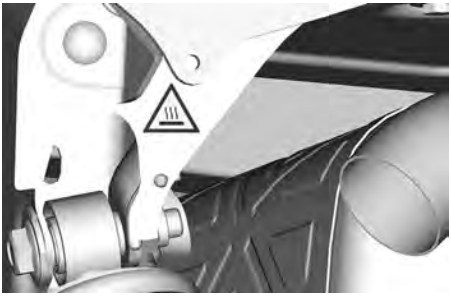

RH SIDE

Coolant Hot - Warning Label

⚠ WARNING

Do not open when HOT.

Jump-Start Information - Pictogram

NOTICE

Do not use any component of the steering system to jump - start the vehicle. Failure to comply will result in DPS unit malfunction.

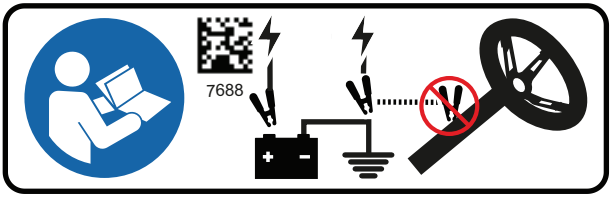

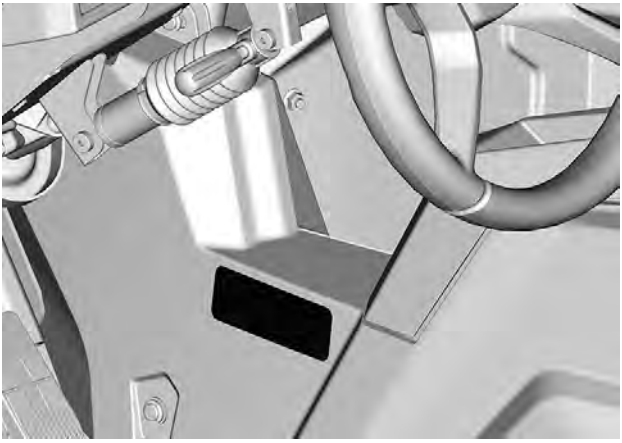

PRE-RIDE INSPECTION

Always inspect and confirm the safe operating condition of your vehicle prior to ride. Always follow the maintenance schedule described in this Operator's Guide.

⚠ WARNING

Perform a pre-ride inspection before each ride to detect any potential problem that could occur during operation. The pre-ride inspection can help you monitor component wear and deterioration before they become a problem. Correct any problem that you discover to reduce the risk of a breakdown or crash.

Before using this vehicle, the operator should always perform the following pre--ride inspection check list.

Refer to *maintenance procedures* for details.

Pre-Ride Inspection Check List

What to Do Before Starting the Engine (Key OFF)

Items to Be Inspected	Inspection to Perform	✓
Engine oil (V-Twin engines)	Check engine oil level.	
Coolant	Check coolant level.	
Brake fluid	Check brake fluid level.	
Engine air filter	Inspect the engine air filter, clean or replace if needed (service more often when riding in dusty conditions).	
CVT air filter	Inspect and clean the CVT air filter (when riding in dusty conditions).	
Radiator	Check cleanliness of the radiator.	
Front grille	Inspect front grille for cleanliness.	
Exhaust system	If not already done, clean the area surrounding the exhaust system, especially if during the last ride, the vehicle was used in a swamp, bog, hay or dead leaves.	
Drive shaft bellows	Check drive shaft bellows and protectors condition.	
Tires	Check tire pressure and condition. Refer to the *Tire Pressure Label* and adjust according to load.	
Wheels	Check wheels for damage and for abnormal play. Make sure that lug nuts are tightened. Refer to	

Items to Be Inspected	Inspection to Perform	✓
	Wheels and Tires in *Maintenance Procedures* for torque specification.	
Cargo and load	**Cargo Load:** If you transport a cargo, respect the maximum loading capacity. Refer to *Loading the Cargo Box*. Ensure cargo is properly secured to the rear cargo box. **Vehicle Load:** Ensure that total load on the vehicle (including operator, passengers, cargo, tongue weight and added accessories) does not exceed specifications. Refer to *Carrying Loads*.	
Hitch	If you are pulling a trailer or another equipment: – Check hitch and trailer ball condition. – Respect the tongue capacity and towing capacity as indicated on the label affixed to the hitch or refer to *Technical Specifications*. – Ensure trailer is properly secured to hitch.	
Chassis and suspension	Check for debris on or in the vicinity of the exhaust system, remove if any and clean properly. Check underneath vehicle for any debris on chassis or suspension components (upper and lower arms, wheels, shock absorber, springs) and clean them properly	
Doors	Check doors for any damage. Have the doors replaced if any damage is found. Close both doors and confirm that they latch securely.	

What to Do Before Starting the Engine (Key ON)

ITEMS TO BE INSPECTED	INSPECTION TO PERFORM	✓
Digital display	Check operation of indicator lamps in digital display(during first few seconds of key ON).	
	Check for messages in gauge.	
Lights	Check operation and cleanliness of: – Headlights (High and Low) – Taillights – Brake lights.	
Seats and seat belts	Check if seats are properly latched.	

ITEMS TO BE INSPECTED	INSPECTION TO PERFORM	✓
	Check seat belts for any damage. Fasten seat belts and confirm that they latch and unlatch securely.	
Accelerator pedal	Press on the accelerator pedal a few times to ensure it operates freely and it returns to the rest position when released.	
Brake pedal	Press down on the brake pedal and make sure you feel firm resistance and that it fully returns to position when released.	
Fuel level	Check the fuel level.	

What to Do After the Engine is Started

ITEMS TO BE INSPECTED	INSPECTION TO PERFORM	✓
Steering	Check if steering operates freely by completely turning it from side to side.	
Ignition switch	Check if switch operates correctly by turning the key to OFF position. The engine should shut down.	
Shift lever	Check operation of shift lever (P, R, N, H and L).	
2WD/4WD/Front Diff Lock selector	Check operation of 2WD/4WD/Front Diff Lock selector.	
Brakes	Drive forward slowly a few feet and apply brakes. The brake pedal must feel firm when applied. The pedal must return to rest position when released. The brakes must respond adequately to the driver's input.	
Winch	Check operation of winch.	

REPORTING SAFETY DEFECTS

In Canada, if you believe that your vehicle has a defect which could cause a crash or could cause injury or death, you should immediately inform Transport Canada in addition to notifying Bombardier Recreational Products Inc.

If Transport Canada receives similar complaints, it may open an investigation, and if it finds that a safety defect exists in a group of vehicles, it may order a recall and remedy campaign. However, Transport Canada cannot become involved in any individual problems between you, your dealer or Bombardier Recreational Products Inc.

To contact Transport Canada:

819-994-3328 (Gatineau-Ottawa area or internationally)
Toll free : 1 800-333-0510 (in Canada)

Transport Canada - ASFAD
330 Sparks Street
Ottawa, ON
K1A 0N5

https://www.tc.gc.ca/recalls

VEHICLE INFORMATION

PRIMARY CONTROL

It is important to know the location and operation of all controls, and to develop and practice smooth and coordinated use of them.

Some vehicle safety labels are not shown on illustrations. For information on vehicle safety labels, refer to *Important On-Product Labels*.

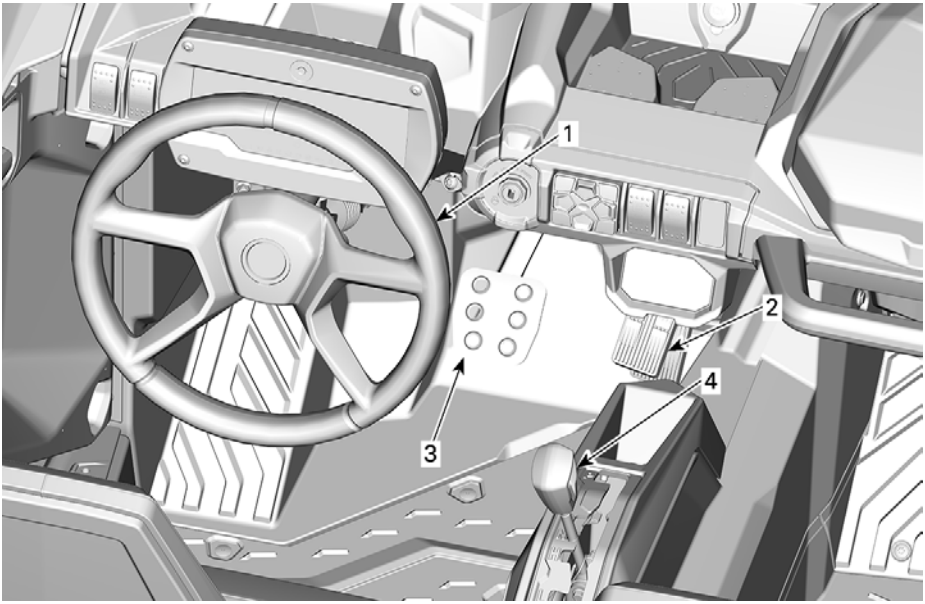

1. *Steering wheel*
2. *Accelerator pedal*
3. *Brake pedal*
4. *Shift lever*

Steering Wheel

The steering wheel is located in front of the driver's seat.

The steering wheel steers the vehicle to the left or right.

Turn the steering wheel in the direction you want to go.

Grip the steering wheel with both hands, without having thumbs rolled around the steering wheel.

⚠ CAUTION

Under rough trail conditions or when crossing an obstacle, the steering wheel could suddenly jerk on one side, causing hand or wrist injuries if the thumbs are rolled around the steering wheel.

A dynamic power steering (DPS) reduces the effort to turn the steering wheel.

Accelerator Pedal

The accelerator pedal is located on the right side of the brake pedal.

The accelerator pedal controls the engine speed.

To increase or maintain vehicle speed, press on the accelerator pedal with your right foot.

To decrease vehicle speed, release the accelerator pedal.

The accelerator pedal is spring loaded and should return to rest position (idle) when not pressed.

Brake Pedal

The brake pedal is located on the left side of the accelerator pedal.

The brake pedal function is to slow down or stop the vehicle.

To decrease vehicle speed or to stop vehicle, press down the brake pedal with your right foot.

The brake pedal is spring loaded and should return to rest position when not pressed.

Shift Lever

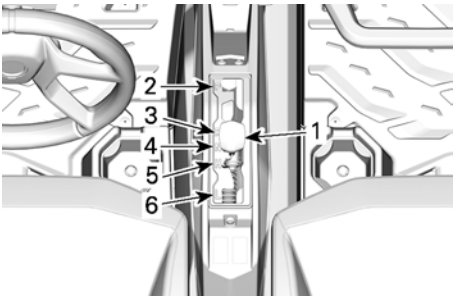

1. *Shift lever*
2. *Park*
3. *Reverse*
4. *Neutral*
5. *High range (forward)*
6. *Low range (forward)*

The shift lever is located on the lower console, between the seats.

The shift lever is used to change the gearbox position.

The vehicle must be stopped and brakes applied prior to selecting any gear.

⚠ WARNING

This gearbox is not designed to shift while vehicle is moving.

Park

The park position locks the gearbox to help prevent vehicle movement.

⚠ WARNING

Always use the PARK (P) position when the vehicle is not in operation. The vehicle can roll if the shift lever is not set to P (PARK).

Reverse

The reverse position allows the vehicle to go backwards.

NOTE:
In reverse operation, the engine RPM is limited thus limiting the vehicle reverse speed.

⚠ WARNING

When driving downhill in reverse, gravity can increase the vehicle speed above safe reverse speed.

Neutral

The neutral position disengages the gearbox.

High Range (Forward)

This position selects the high speed range of the gearbox. It is the normal driving speed range. It allows the vehicle to reach its maximum speed.

Low Range (Forward)

This position selects the low speed range of the gearbox. It allows the vehicle to move slowly with maximum torque at the wheels.

NOTICE

Use the low speed range to pull a trailer, carry heavy cargo, go over obstacles or drive uphill and downhill.

SECONDARY CONTROLS

NOTE:
Some vehicle safety labels are not shown on illustrations. For information on vehicle safety labels, refer to *Important On-Product Labels*.

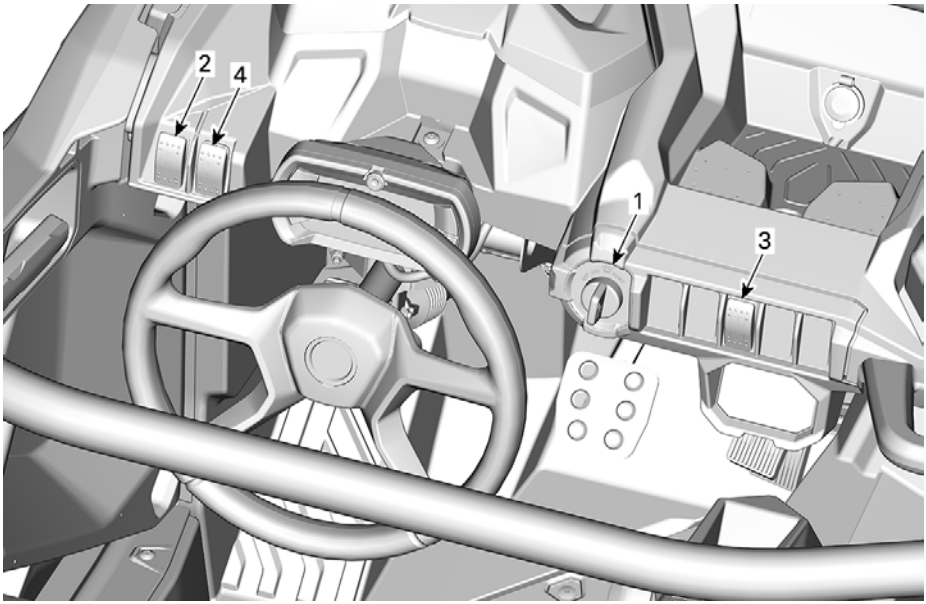

1. *Ignition switch*
2. *Headlight/Dimmer switch*
3. *2WD/4WD Switch*
4. *Horn switch (as per country conformity)*

Ignition Switch and Keys

The ignition switch is located on the upper console area.

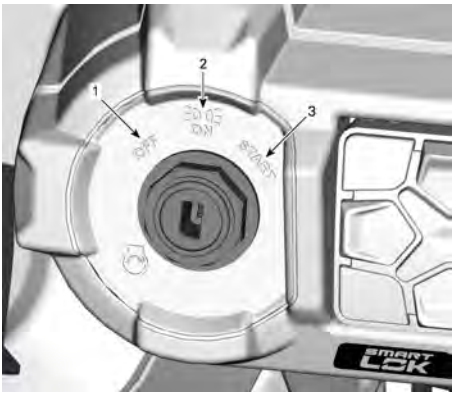

TYPICAL

1. *OFF*
2. *ON*
3. *START*

OFF

The key can be inserted or removed in this position only.

In OFF position, the electrical system of the vehicle is disabled.

The engine is shut down by turning the ignition switch to OFF position.

ON

When the key is turned in this position, the electrical system of the vehicle is activated.

The gauge should wake-up.

The vehicle lights are turned on.

The engine can be started.

START

This position starts the engine.

NOTE:
If the ignition switch is left ON for more than 30 minutes, engine will not start unless ignition switch is turned OFF, then ON again.

Keys

Basic Key

The vehicle is delivered with 2 basic key.

Those 2 mechanical keys do not have speed or torque restrictions.

D.E.S.S. Key (Available as an option)

For all D.E.S.S. related option, see an authorized Can-Am Off-road dealer for information.

Digitally Encoded Security System (D.E.S.S.)

The ignition keys contain an electronic circuit that gives it a unique electronic serial number.

The D. E. S. S. system reads the key code and allows engine starting for keys it recognizes.

This vehicle can be operated using 3 different types of key programming:

– Work
– Normal
– Performance

Refer to your dealer for complete information.

NOTE:
Additional keys are available from your dealer as an accessory.

⚠ WARNING

Rollovers, tipovers, collisions and loss of control resulting in serious injury or death are possible with the performance or normal key. Using the normal key is not a substitute for the operator being prepared, qualified, and operating with care.

Performance Key

The performance key allows the user to access the full torque of the engine as well as the top speed of the vehicle.

This may be useful for riders who prefer crisper throttle response, and for environments where higher speeds and greater acceleration are appropriate. For example, in wide-open straight trails, operators may prefer the performance key.

Normal Key

The normal key limits the vehicle speed to 70 km/h (43 MPH) and applies a torque reduction.

Work key

The work key allows for usage of 100% of maximum engine torque but limits vehicle speed to 40 km/h (25 MPH).

⚠ WARNING

On steep downhills, the engine speed limiter may not prevent the vehicle from accelerating beyond this speed.

This key may be useful for riders who prefer more gradual acceleration, or for riding in environments where full speed and high acceleration are not desirable. For example, in narrow, winding trails, operators may prefer a normal key.

D.E.S.S. Flexibility

The D.E.S.S. of your vehicle can be programmed by your authorized Can--Am Off-road dealer to accept up to 8 different keys.

If you have more than one D.E.S.S. equipped your vehicle, each can be programmed by your authorized Can--Am Off-road dealer to accept the other vehicle D.E.S.S. keys.

Headlight Dimmer Switch

The headlight dimmer switch is located on the upper console.

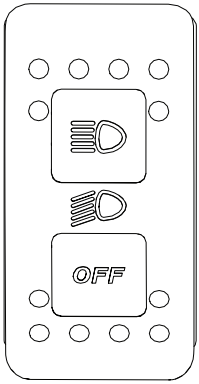

This switch is used to select either the headlights OFF position, low or high beams.

2WD/4WD Switch

The 2WD/4WD switch is located on the upper console.

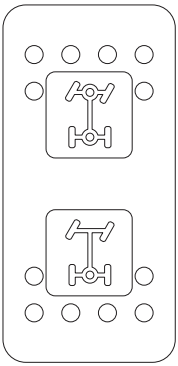

This switch selects 2 wheel drive, or 4 wheel drive mode when the vehicle is stopped.

NOTICE

The vehicle must be stopped to engage or disengage 2WD/4WD switch.
Mechanical damage may occur if switch is engaged or disengaged while driving.

The 4WD mode is engaged when the switch is pushed upwards.

The 2WD mode is engaged when the switch is pushed downwards. The vehicle is then rear wheel drive only.

Front Differential Mode Switch

The front differential mode switch is located on the console.

ROCK/TRAIL Switch

X rc Models

This switch is used to choose between the ROCK or TRAIL mode.

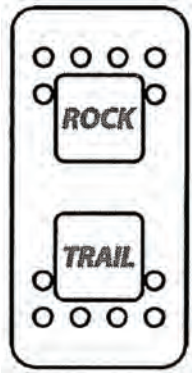

TRAIL

This mode must be used during all normal riding.

The front differential will automatically synchronize the front wheels as needed.

ROCK

This mode must be used when riding in rocky conditions to optimize traction and maneuverability.

The front differential will prevent the wheels to slip by pre-charging the clutches. It will not wait to detect a slip. Based on the driver's demand (engine torque), the module will adjust the clutches to optimize traction while maintaining the ease of manoeuvrability. This function is active up to 20 km/h (12 MPH).

Above 20 km/h (12 MPH), it will monitor for wheel slippage and synchronize as needed.

Rear Differential Lock Switch

The rear differential lock switch is located on the upper console.

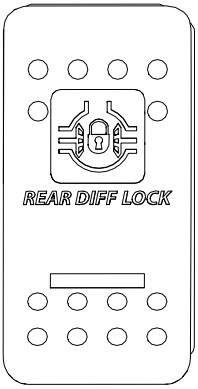

This switch enables locking of rear differential.

NOTICE

The vehicle must be stopped to engage or disengage the differential switch.
The vehicle must be in gear (not in Park) to proceed
Mechanical damage may occur if switch is engaged or disengaged while driving.

The rear differential is locked when the switch is pushed upwards and unlocked when the switch is pushed downwards.

If the vehicle is in Park and the switch is pushed downwards, the rear differential will stay locked.

Keypad

The keypad is used to navigate through various menus and options when the *7.6" Digital Display* is installed.

The keypad is located on the upper console.

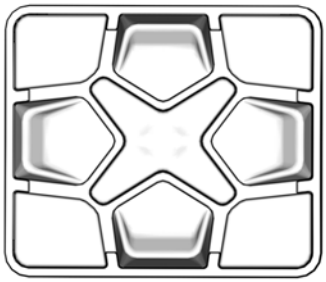

Winch Switch

The winch can be controlled from inside and outside the vehicle with the winch control switch located in the upper console.

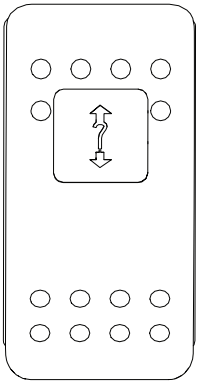

Refer to your *Winch Guide* included with your vehicle for proper winch operation.

Horn Switch (On applicable models)

To activate the horn, push on the switch.

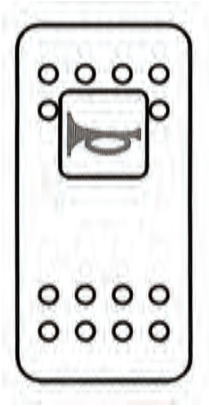

EQUIPMENT

Some features may not apply to your model or could be optional.

Some on-product labels are not shown on illustrations.

For information concerning the safety labels, refer to *Important On-Product Labels*.

Tilt Steering

The steering wheel height is adjustable.

Adjust the steering wheel height to face your chest, not your head.

To adjust steering wheel height:

1. Pull the tilt lever toward you.
2. Move steering wheel to the desired position.
3. Release the tilt lever.

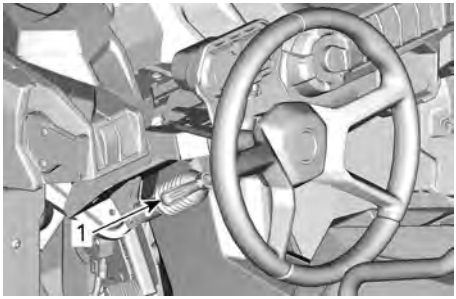

1. Tilt lever

⚠ WARNING

Never adjust the steering wheel height while riding. You may lose control.

Cup Holders

Two cup holders are located on each side of the console.

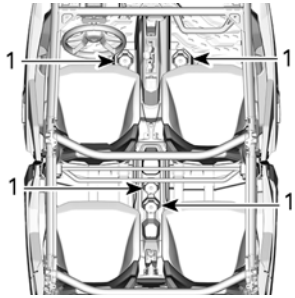

1. Cup holders

NOTE:
Use only tight fitting containers, a loose container can tip over and interfere with feet movements. Do not use cup holders while riding in rough conditions.

Passenger's Handhold

The passenger's handhold are located directly in front of the passenger's seats.

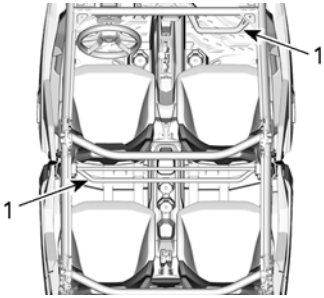

1. Passenger handhold

Holding the handhold helps the passenger brace against the movement of the vehicle and helps keep hands and body inside the cockpit in the event of a rollover.

⚠ WARNING

Never use any part of vehicle cage as handholds. Hands can be struck by objects outside the cockpit or crushed in a rollover.

Storage Compartments

The vehicle is equipped with different types of storage compartments designed to carry light objects.

Closed Storage Compartment

A storage compartment is available behind the multifunction gauge on the driver side.

A glove box is available on the passenger side.

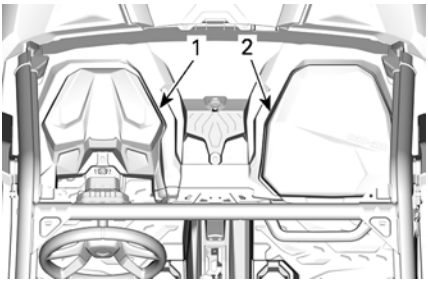

1. *Storage compartment*
2. *Glove box*

Opened Storage Compartments

Multiple opened storage compartments are available in the console.

⚠ WARNING

When riding vehicle, make sure no object stored in opened storage compartments could cause harm in the event of a roll over.

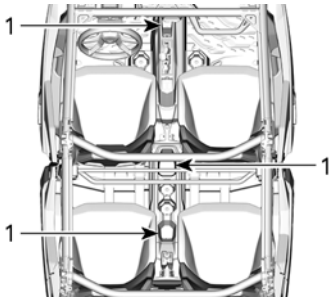

1. *Opened storage compartment*

Tool Kit

A tool kit with basic tools is provided with this vehicle.

It is located inside the glove box.

This tool kit includes:

- Pliers
- Socket wrench 14 and 16 mm
- Open wrench 15 and 17 mm
- Open wrench 10 and 13 mm
- Screwdriver (flat and Phillips)
- Torx key T30
- Suspension adjustment tool

Footrests

The vehicle is equipped with driver and passenger footrests to allow firmly planting feet on vehicle floor, which helps to maintain proper body position while riding.

The footrests help minimize the risk of leg or foot injury.

Always wear appropriate footwear. See *Riding Gear*.

Half Doors

Half doors on each side of the cockpit to help arms, legs or shoulders stay inside the vehicle, thus reducing the risk of injuries. Half doors may also keep bushes or debris out of cockpit.

⚠ WARNING

Never operate the vehicle while the doors are removed or opened.

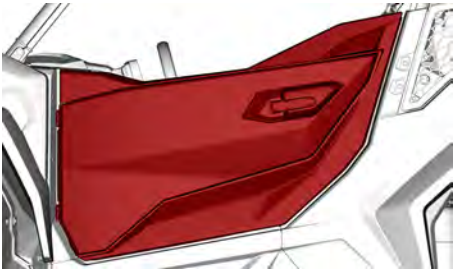

LH DOOR

To open door, pull on handle.

LH EXTERIOR HANDLE

LH INTERIOR HANDLE

Seat Belts

This vehicle is equipped with 3 points seat belts to help protect driver and passenger in the event of a collision, rollover, or tipover. The seat belts can help keep occupants stay in the passenger compartment.

⚠ WARNING

Wear seat belts properly at all times.
Seat belts reduce the risk of injury in case of a crash and help to keep limbs inside the cockpit during a rollover or any accidents. Before riding, everyone aboard should know how to unbuckle their seat belt rapidly. Knowing how to properly detach your seat belt is a crucial skill that can save your life in an emergency situation. In the event of an accident or vehicle malfunction, being able to quickly release your seat belt can help you escape the vehicle and avoid potential hazards such as fire or sinking. Additionally, knowing to quickly release your seat belt can also help you assist others such as children or older persons.

If driver's seat belt is not fastened when:

- The ignition is turned ON
  - The seat belt indicator lamp will be turned ON.
  - The multifunction gauge will display the message: SEAT BELT.
- The engine is started and shift lever is moved out of PARK, vehicle speed will be limited to a maximum

of approximately 20 km/h (12 MPH) on flat ground.

⚠ WARNING

The vehicle may reach higher or lower speed depending on inclines.

⚠ WARNING

There is no indicator light or message for the passengers seat belt. The driver is responsible for the passenger safety and should ensure the passengers buckle their seat belt.

Fastening and Adjusting the Seat Belt

The seat belt is equipped with a semi--cinching tab that locks the lap belt when the webbing is under tension.

TYPICAL

1. *Semi-cinching tab*

To fasten the seat belt, insert the latch plate into the buckle, then pull the belt to ensure it is properly fastened.

Adjust the seat belt tightly against your body by pulling the shoulder belt upwards.

TYPICAL

⚠ WARNING

Wear seat belt properly.
Fasten seat belts and confirm that they latch and unlatch securely and tightened against the body.
Make sure it is not twisted or defective.

To release the seat belt, push on the red button on the seat belt buckle.

Driver's Seat

The driver's seat can be adjusted forward and backward.

To adjust seat, move the seat lever aside to unlock the seat. Release the lever to lock the seat into desired position.

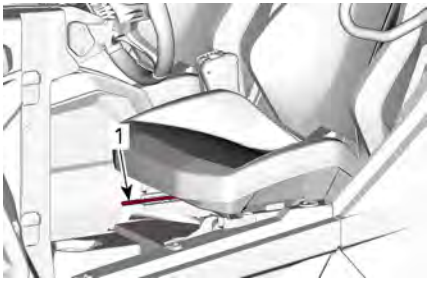

1. *Seat lever*

⚠ WARNING

Never adjust the seat position while driving.

Passenger's Seat

The front passenger's seat can be adjusted forward and backward.

To adjust seat, move the seat lever aside to unlock the seat.

Release the lever to lock the seat into desired position.

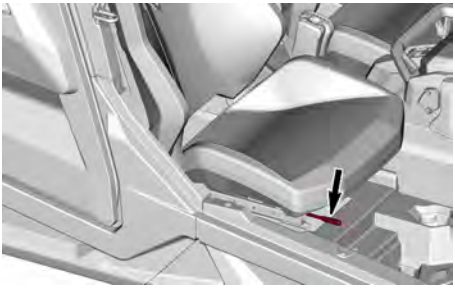

⚠ WARNING

Never adjust the seat position while vehicle moving.

Fuel Reservoir Cap

The fuel reservoir cap is located on the right hand side of the vehicle.

Refer to *Fuel* for information on fueling procedure and fuel requirements.

Winch

⚠ WARNING

To avoid severe injury or death or important components damages.

- **Never use the winch cable/ rope to retain a vehicle during trailering.**
- **Never ride with the winch cable/rope attached to a load or another vehicle.**
- **Only use the winch to help a stuck vehicle (snow, mud, etc.).**
- **Always refer to the winch manufacturer's instruction before pulling loads.**

Refer to your winch guide included with your vehicle for proper winch operation.

The winch can be actuated inside the vehicle using the winch control switch on the upper console.

NOTICE

Using the winch intensively over a long period of time may discharge the battery.

Intensive use of the winch may cause the built-in circuit breakers to momentarily turn OFF. In such a case, wait a moment, then continue winching. The breakers automatically turn ON once they have cooled down.

The following tips will help to reduce the risk of discharging the battery:

- Always unreel manually: Unlock the cable using the handle then pull on the hook strap to unreel.
- Let the vehicle run while winching. Do not stop vehicle immediately after winching to let battery recharge.
- Also, when winching for more than 30 seconds, it is recommended to increase engine RPM in the range

of 3000 RPM to increase charging power to the battery.

⚠ WARNING

Make sure vehicle is in NEUTRAL (N) or PARK (P) before increasing engine RPM.

Cargo Box

The cargo box may be used for various types of cargo.

⚠ WARNING

To reduce the risk of loss of control or loss of load, use the cargo box only in accordance with *Carrying Loads* in the *Safety Information* section.

Anchoring Hooks

To provide anchoring point in order to secure cargo inside the cargo box, 4 anchoring hooks are located inside the cargo area.

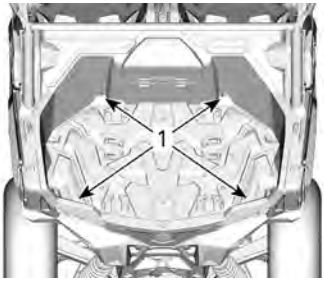

TYPICAL

1. Anchoring Hooks

There are 6 anchoring points inside the cargo box to install LinQ attachments and 2 on top of the sides.

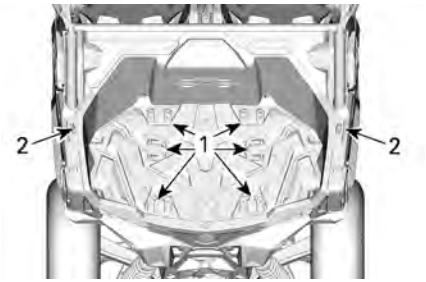

TYPICAL

1. LinQ mounting point in cargo box
2. LinQ mounting point on cargo box sides

NOTICE

Never lift vehicle using anchoring hooks.

Trailer Hitch

The vehicle comes equipped with a 50.8 x 50.8 mm (2 x 2 in) standard receiver hitch.

12-Volt Power Outlet

Convenient for handheld spotlight or other portable equipment.

Remove protective cap to use. Always reinstall it after use to protect against weather.

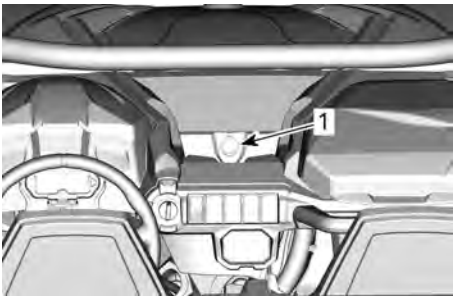

1. 12 V power outlet

Full Underbody Skid Plate

Skid plates provide essential protection.

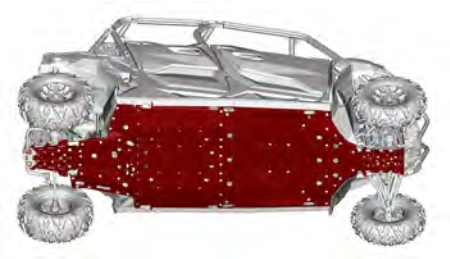

4.5” DIGITAL DISPLAY

MULTIFUNCTION DISPLAY

Lower Display

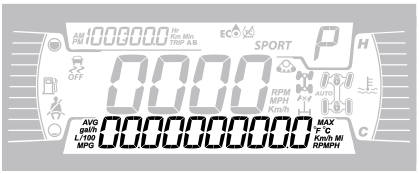

May display the following:

– RPM
– Speed statistics
– Engine Temperature
– Battery Voltage
– Settings
– Messages

Use LOWER button to change the displayed information.

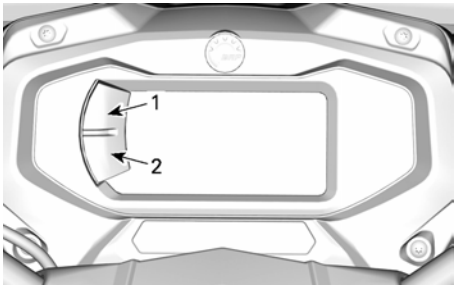

1. Upper button
2. Lower button

Left Lateral Display

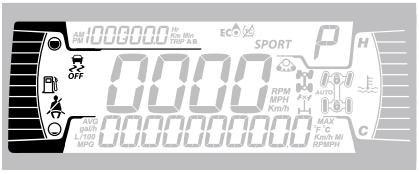

The left lateral display includes:

– Fuel level indicator
– Seat belt icon
– Traction control icon (if equipped)

Right Lateral Display

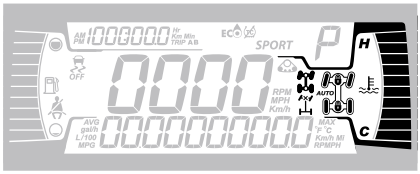

The Right lateral display includes:

– Engine Temperature
– 2X4 / 4X4 telltale
– Rear diff lock
–

Icon	Description
	2X4 icon
	4X4 icon
	Rear differential lock

Central Display

The central display includes:

– Vehicle speed in km/h or MPH or RPM.
– Track kit Active (if equipped)

Transmission Position Display

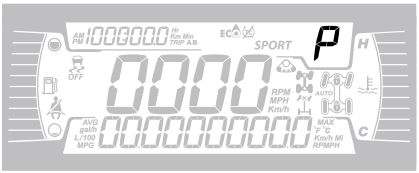

This display shows gear position of gearbox:

– P (Park)
– R (Reverse)
– N (Neutral)
– H (High Range)
– L (Low Range)
– – (Invalid Range)

Engine Mode Display

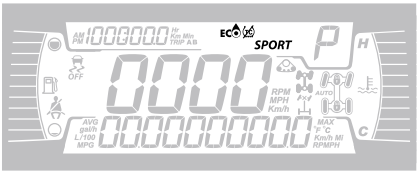

ENGINE MODE DISPLAY

The MODE display indicates the selected mode of operation:

– ECO OFF (nothing is display)
– ECO
– SPORT

To change between modes, hold LOWER button and short press LOWER button to cycle through available modes.

Engine Mode	Message at Activation
Eco OFF	ECO OFF
Eco	ECO MODE
Sport	SPORT MODE

The Traction Control icon is also displays in this area.

Trip Display

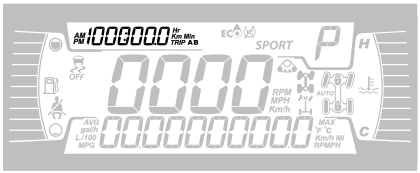

This display shows trip information:

– Cumulative distance odometer
– Trip A
– Trip B
– Vehicle hour meter
– Clock

Use UPPER button to change the displayed information.

Hold UPPER button to reset Trip A/B meters.

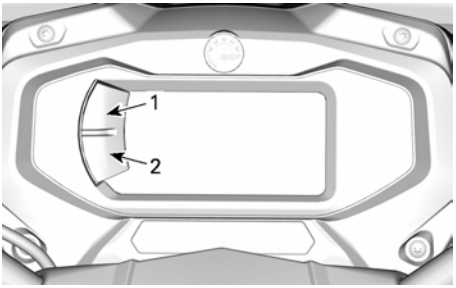

1. *Upper button*
2. *Lower button*

Indicator Lamps

Warning and Telltale Lights

WARNING and Telltale Lights	
!	ORANGE - Vehicle Malfunction
	BLUE - High Beam
	RED - The engine temperature is too high.

WARNING and Telltale Lights	
N	GREEN - Neutral
	RED - Brake lock lever is engaged or malfunction of the brake system
	RED - The battery voltage too low or problem with the electrical system
	RED - Low oil pressure Normally ON when engine is OFF
	ORANGE - Low fuel level
	ORANGE **Turn on**: Malfunction of the vehicle emissions control system **Blink**: Engine problems, the limp home mode is activated. Have the vehicle serviced immediately.

Icons and Indicators

Icons and Indicators	
SPORT	– Denotes SPORT mode is selected.
ECO	– Denotes ECO mode is selected.
	When lit, seat belt not buckled with vehicle immobilized. Flashing when vehicle is moving.
	– When lit, indicates that a

Icons and Indicators	
	maintenance is required. – See your authorized Can-Am Off-road dealer or person of your own choosing for the maintenance.
	– Track kit active (when installed).
	– Denote front differential lock - Smart-Lok is activated. (If Equipped)

SETTINGS

The buttons to navigate through menus are located on the left side of the LCD display.

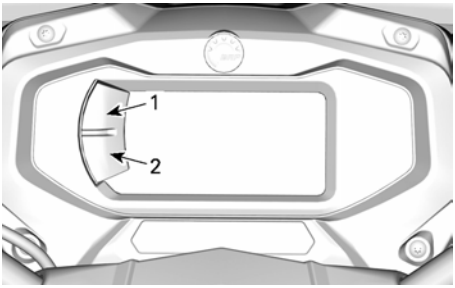

1. *Upper button*
2. *Lower button*

Setup

Using LOWER button, select **SETTINGS** and hold to enter setting menu.

Maintenance Reset

NOTE:
Only when the maintenance icon is displayed.

Using LOWER button, select **RES MAINT** and hold to reset maintenance.

Fault Codes

Available only when at least one code is activated.

Using LOWER button, select **CODES** and hold to see actives fault codes.

Fault codes will be scrolled on the Lower Display.

Reset Stats

Using LOWER button, select **RESET STAT** and hold to reset.

Unit Selection

This multifunction gauge is factory preset in Imperial units but it is possible to change it to Metric units.

Using LOWER button, select **UNITS** and hold button to change units.

Setting Clock

All of the following action must be performed using the LOWER button.

1. Select **CLOCK** and hold to adjust clock.
2. Press the button to select clock display.
3. Push and hold the button for 1 second.
4. Press the button to select 12:00 AM PM or 24:00 time base.
5. Push and hold the button to acknowledge selection.
6. Press the button to change hours (hours flash).
7. Push and hold the button to acknowledge hour selection.
8. Press the button to switch to minutes (minutes flash).
9. Push and hold the button to acknowledge minutes selection.

Setting Language

The gauge display language can be changed.

Refer to an authorized Can-Am Off--road dealer for language availability and to setup the gauge to your preference.

Setting Brightness

The brightness of the LCD display can be adjusted.

Using LOWER button, select **BRIGHTNESS** and hold button to change brightness.

Using LOWER button, adjust brightness then push and hold the button to acknowledge selection.

7.6" DIGITAL DISPLAY

Multifunction Display

⚠ WARNING

Do not adjust the display while riding, you could lose control.

Lower Display

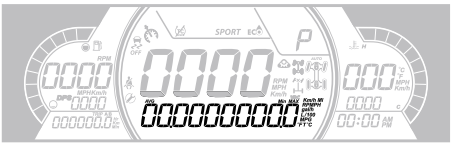

May display the following:

- RPM
- Speed statistics
- Engine Temperature
- Battery Voltage
- Settings
- Messages
- Active DPS mode

The SPEED STAT display shows the maximum and the average speed. Hold MENU or OK button for 1 second to reset.

Left Lateral Display

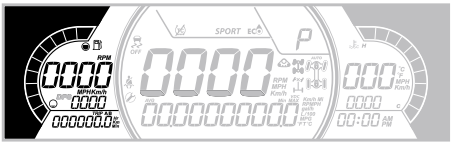

The left lateral display includes:

- Fuel level indicator
- Tripmeter (A - B)
- Odometer
- Vehicle Hour meter
- DPS indicator
- RPM
- Vehicle speed

NOTE:
When the vehicle speed is indicated here, the RPMs are automatically indicated in the central part and vice versa.

Right Lateral Display

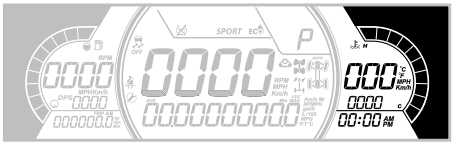

The right lateral display includes:

- Engine Temperature
- Clock
- Utility Speed limiter indicator

The speed indicator in this display is activated when the central display shows information other than the speed. Otherwise it is blank.

Central Display

May display the following:

- RPM
- Vehicle speed

Transmission Position Display

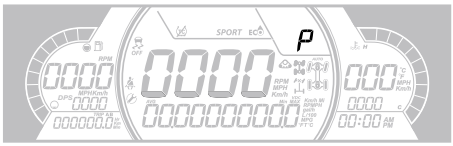

This display shows gears position of gearbox:

- P (Park)
- R (Reverse)
- N (Neutral)
- H (High range)
- L (Low range)
- – (Invalid gear)

Engine Mode Display

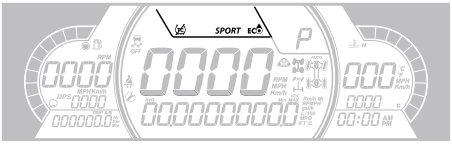

The engine mode display indicates the selected mode of operation:

– SPORT
– ECO

A message of the selected mode will be displayed on the lower display at activation and deactivation as follow:

Engine Mode	Message at Activation
Sport	SPORT MODE
ECO	ECO MODE

The Traction Control icon is also displays in this area.

Middle Right Display

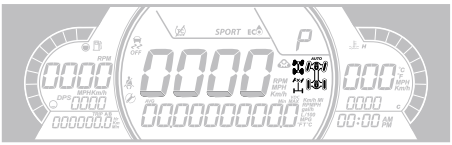

The middle right display indicates the selected mode of operation:

– 2X4
– 4X4
– Front differential lock (Smart–Lok)
– Track kit active (when installed).

Icon	Description
	2X4 icon
	4X4 icon
	Front differential lock
	Track kit active (when installed).

Middle Left Display

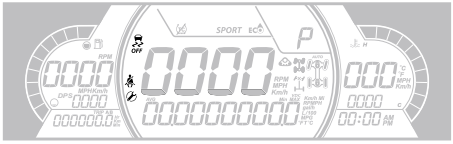

The middle left lateral display includes:

– Traction Control icon
– Seat belt reminder
– Maintenance reminder

Indicator Lamps

Warning and Telltale Lights

WARNING and Telltale Lights	
!	ORANGE - Vehicle Malfunction
	BLUE - High Beam
	RED - The engine temperature is too high.
N	GREEN - Neutral
	RED - Brake lock lever is engaged or malfunction of the brake system

WARNING and Telltale Lights	
	RED - The battery voltage too low or problem with the electrical system
	RED - Low oil pressure Normally ON when engine is OFF
	ORANGE - Low fuel level
	ORANGE **Turn on**: Malfunction of the vehicle emissions control system **Blink**: Engine problems, the limp home mode is activated. Have the vehicle serviced immediately.

Icons and Indicators

Settings

Setup

Using the MENU button on the keypad, select **SETTINGS** and hold to enter setting menu.

OK button can be pressed instead of holding MENU button.

Maintenance Reset

NOTE:
Only when the maintenance icon is displayed.

Using MENU button, select **RES MAINT** and hold to reset maintenance.

Fault Codes

Available only when at least one code is activated.

Using MENU button, select **CODES** and hold to see active fault codes.

Fault codes will be scrolled on the Lower Display.

Reset Stats

Using MENU button, select **RESET STAT** and hold to reset.

Unit Selection

This multifunction gauge is factory preset in Imperial units but it is possible to change it to Metric units.

Using MENU button, select **UNITS** and hold button to change units.

Speed/RPM

The speed and RPM display can be swapped.

Using MENU button, select **SPEED/ RPM** and hold button to invert speed and RPM display.

Setting Clock

All of the following action must be performed using the MENU button.

1. Select **CLOCK** and hold to change time.
2. Press the button to select clock display.
3. Push and hold the button for 1 second.
4. Press the button to select 12:00 AM PM or 24:00 time base.
5. Push and hold the button or OK button to acknowledge selection.
6. Press the button to change hours (hours flash).
7. Push and hold the button or OK button to acknowledge hour selection
8. Push the button to switch to minutes (minutes flash).
9. Push and hold the button to acknowledge minutes selection.

Setting Brightness

The brightness of the LCD display can be adjusted.

Using MENU button, select **BRIGHTNESS** and hold MENU button to select the brightness setting.

Using MENU button, adjust brightness then push and hold MENU button to acknowledge selection.

Setting Language

The gauge display language can be changed.

Refer to an authorized Can-Am Off--road dealer for language availability and to setup the gauge to your preference.

DPS Modes

The lower display can show which DPS mode is active. Refer to *Tune Your ride*.

FUEL

Fuel Requirements

NOTICE

Always use fresh gasoline. Gasoline will oxidize; the result is loss of octane, volatile compounds, and the production of gum and varnish deposits which can damage the fuel system.

Alcohol fuel blending varies by country and region. Your vehicle has been designed to operate using the recommended fuels, however, be aware of the following:

- Use of fuel containing alcohol above the percentage specified by government regulations is not recommended and can result in the following problems in the fuel system components:
  - Starting and operating difficulties.
  - Deterioration of rubber or plastic parts.
  - Corrosion of metal parts.
  - Damage to internal engine parts.
- Inspect frequently for the presence of fuel leaks or other fuel system abnormalities if you suspect the presence of alcohol in gasoline exceeds the current government regulations.
- Alcohol blended fuels attract and hold moisture which may lead to fuel phase separation and can result in engine performance problems or engine damage.

Recommended Fuel

The gasoline must have the following minimum octane requirements:

Premium unleaded gasoline with an AKI (R+M)/2 octane rating of 91, or a RON octane rating of 95

Use unleaded gasoline containing MAXIMUM 10% ethanol.

NOTICE

Never experiment with other fuels. Engine or fuel system damages may occur with the use of an inadequate fuel.

NOTICE

Do NOT use fuel from fuel pumps labeled E85.

Use of fuel labeled E15 is prohibited by U.S. EPA Regulations.

Vehicle Fueling Procedure

⚠ WARNING

- **Fuel is flammable and explosive under certain conditions.**
- **Never use an open flame to check fuel level.**
- **Never smoke or allow flame or spark in vicinity.**
- **Always work in a well-ventilated area.**
- **Vehicle must be on a level surface to perform fueling.**

1. Place vehicle on a level surface.
2. Move the shift lever into PARK position.
3. Stop engine.

⚠ WARNING

Always stop engine before refueling.

4. Have occupants get out of vehicle.

⚠ WARNING

Do not allow anyone to remain in the vehicle while fueling. If there is a fire or explosion during fueling, a vehicle occupant could be unable to quickly leave the area.

5. Slowly unscrew the fuel reservoir cap counterclockwise to remove it.

⚠ WARNING

If a differential pressure condition is noticed (whistling sound heard when loosening fuel reservoir cap) have vehicle inspected and/or repaired before further operation.

6. Insert the spout into the filler neck.
7. Pour fuel slowly so that air can escape from the tank and prevent fuel flow back. Be careful not to spill fuel.
8. Stop filling when the fuel reaches the bottom of filler neck. **Do not overfill.**

⚠ WARNING

Never top up the fuel tank before placing the vehicle in a warm area. As temperature increases, fuel expands and may overflow.

9. Fully tighten fuel reservoir cap clockwise until you hear a clicking noise.

NOTICE

Always wipe off any fuel spillage from the vehicle.

BREAK-IN PERIOD

Operation During Break-In

A break-in period of 10 operating hours or 300 km (200 mi) is required for the vehicle.

Engine

During the break-in period:

- Avoid full throttle operation.
- Avoid pressing accelerator pedal more than 3/4 of the stroke.
- Avoid sustained accelerations.
- Avoid prolonged cruising speeds.
- Avoid engine overheating.

However, brief accelerations and speed variations contribute to a good break-in.

Brakes

⚠ WARNING

New brakes will not operate at their maximum efficiency until their break-in is completed. Braking performance may be reduced, so use extra caution.
Apply moderate braking force for the 40 to 50 first braking events.

Belt

A new belt requires a break in period of 50 km (30 mi).

During the break-in period:

- Avoid strong acceleration and deceleration.
- Avoid pulling a load.
- Avoid high speed cruising.

Starting the Engine

Insert key in ignition switch and turn to the ON position.

Press the brake pedal.

NOTE: If shift lever is not set to PARK (P), the brake pedal must be pressed to allow engine starting.

Turn the key to the start position and hold until the engine starts.

NOTE:
Do not press the accelerator pedal. If the accelerator pedal is pressed at least 50%, the engine will not start.

Release the engine start position immediately when the engine has started.

NOTICE

If engine does not start after a few seconds, do not hold the start position more than 10 seconds. Refer to *Troubleshooting*.

Operating the Shift Lever

1. Apply the brakes and select the desired shift lever position while the engine is at idle.
2. Release the brakes.

NOTICE

When changing gear selection, always completely stop the vehicle and apply the brakes prior to shifting. Damage to the gearbox may occur.

Choosing the Correct Range (Low or High)

It is important to avoid situations known to make the drive belt slip excessively. The main reason the drive belt will slip is if the gearbox is in high range when it should be in low range.

Pay attention to the following:

Low Range

Low range should be used whenever:

- Pulling
- Pushing
- Hauling a load
- 4x4 applications
- Mud holes
- Water holes
- Crossing obstacles
- Climbing onto trailer
- Hill climbing

It is also recommended to use low range if driving for prolonged periods at speeds under 24 km/h (15 MPH).

Please refer to *Break-In Period* for drive belt break-in information.

High Range

High is the default riding range.

Electronic Drive Belt Protection (if available and activated on your model)

Some vehicles have the electronic drive belt protection function activated.

Refer to your authorized Can-Am dealer for availability and possible activation.

This function is activated when riding at too slow speed for the **High Range**, such as in the following situations:

- Pulling
- Pushing
- Hauling a load
- 4x4 applications
- Mud holes
- Water holes
- Crossing obstacles
- Climbing onto trailer
- Hill climbing

In the above mentioned situations the electronic drive belt protection will help protect the CVT drive belt from being damaged by activating the engine torque limiter. The gauge will also scroll a *LOW GEAR* message,

suggesting the operator to immobilize the vehicle and shift to LOW GEAR.

NOTICE

Whenever the electronic drive belt protection is activated, you MUST shift in LOW range. Refer to *Operating the Shift Lever*.

⚠ WARNING

Apply brakes to immobilize vehicle. Put shift lever in reverse (R), and back down the hill, barely releasing brakes to remain at low speed. Do not attempt to turn around. Never coast down hill while vehicle is in neutral. Do not perform hard braking as it increases the risk of tipover.

Stopping the Engine and Parking the Vehicle

⚠ WARNING

Avoid parking on steep slope as the vehicle may roll away.

⚠ WARNING

Always put the vehicle in PARK when stopped or parked to prevent rolling.

⚠ WARNING

Avoid parking in places where hot parts can start a fire.

1. Select the flattest terrain available for parking.
2. Release accelerator pedal and use brakes to completely stop the vehicle.
3. Set shift lever in PARK position.
4. Remove the D.E.S.S. key from the D. E. S. S. post or turn the ignition key in OFF position.

NOTE:
If you must park on a steep incline or if the vehicle is carrying cargo, block the wheels using rocks or bricks.

Tips for Maximizing Drive Belt Durability

Riding style and conditions have a direct impact on drive belt durability.

Your vehicle features a CVT system design that is optimized to offer the best performance.

The CVT and drive belt have successfully endured thousands of miles of durability tests.

However, to maximize drive belt durability and to prevent premature failures, it is important that the operator understands the limits of a belt driven CVT system and adapts their riding style and speed accordingly.

If riding in any of the conditions listed below, BRP highly recommends not to constantly hold the throttle wide open (WOT) for more than five (5) minutes.

– High ambient temperatures (above 30 °C (86 °F)
– Heavy loads: Passengers / Heavy cargo
– Heavy drag: Soft sand / Hill climbing / Mud / Using a track kit.

After a few minutes at WOT, partially release the accelerator and allow the CVT to cool down.

For more tips for maximizing the drive belt durability, refer to *Choosing the Correct Range (Low or High)*.

NOTE:
Component failures resulting from these events are not covered by warranty.

Fuel Flooded Engine

If the engine does not start and it is fuel-flooded, the drowned mode can be activated to prevent fuel injection and to cut ignition while cranking. Proceed as follows:

1. Move shift lever in park position.
2. Turn the ignition key in ON position.
3. Press completely and HOLD accelerator pedal.
4. Turn ignition key in START position during 10 seconds.
5. Release the ignition key.
6. Release accelerator pedal completely.
7. Turn the ignition key to START position again to allow starting.

If it does not work:

1. Remove the spark plugs. Refer to *Spark Plugs* in *Maintenance Procedures* section.
2. Crank engine several times.
3. Install new spark plugs if possible or clean and dry spark plugs.

If engine does not start, see an authorized Can-Am Off-road dealer, a repair shop, or a person of your own choosing for maintenance, repair, or replacement.

Please refer to the *US EPA Emission-Related Warranty* contained herein for information about warranty claims.

What to do if Water is Suspected to be in the CVT

If water is present in the CVT, the engine will accelerate but the vehicle will remain still.

NOTICE

Stop the engine and drain the water to avoid damage to the CVT.

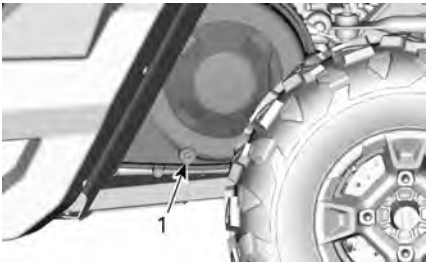

TYPICAL - LEFT SIDE OF VEHICLE UNDER CARGO BOX

1. CVT drain

See an authorized Can-Am dealer , a repair shop or person of your choosing to have the CVT inspected and cleaned.

What to do if Battery is Drained Out

The vehicle can be jump started by using the RED (+) cable to the battery positive pole and the BLACK (-) cable to the vehicle chassis.

NOTICE

Do not connect any electrical source to the steering column or components which are in contact with DPS.

What to Do if Vehicle Rolled Over

Abrupt maneuvers, sharp turns, side hilling or accident may cause vehicle to rollover.

Should the vehicle be rolled over, it will be necessary to have it transported to an authorized Can-Am Off--road dealer for inspection as soon as possible. **NEVER START THE ENGINE!**

Points to be verified, including but not limited to:

- All fluid levels
- Seat belts, including retractors, buckles and semi-cinching tabs
- Cage and its attachment points
- Steering system
- Suspension and its attachment points.

What to do if Vehicle is Submerged

Should the vehicle become immersed, it will be necessary to have it transported to an authorized Can-Am Off--road dealer as soon as possible.

NOTICE

Never start the engine as immersion of the vehicle can cause serious damage to the engine if the correct restart procedure is not followed.

Suspension Adjustment Guidelines

Your vehicle handling and comfort depend upon suspension adjustments.

⚠ WARNING

Suspension adjustment could affect vehicle handling. Always take time to familiarize yourself with the vehicle's behavior after any suspension adjustment has been made.

Choice of suspension adjustments vary with vehicle load, personal preference, riding speed and terrain condition.

The best way to set up the suspension, is to start from factory settings, then customize each adjustment one at a time.

Front and rear adjustments are interrelated. It may be necessary to readjust the rear shock absorbers after adjusting front shock absorbers for instance.

Test run the vehicle under the same conditions; trail, speed, load, etc. Change one adjustment and retest. Proceed methodically until you are satisfied.

Suspension Factory Settings

Factory settings are suitable for almost all conditions.

Take into consideration that an increase in ground clearance can affect the handling of the vehicle.

Front Suspension

Spring Preload
45 mm (1.77 in)

Rear Suspension

Spring Preload
36 mm (1.42 in)

Suspension Adjustments

Spring Preload Adjustment

⚠ WARNING

The left and right shock adjustment on front or rear suspension must always be set to the same position.
Never adjust one shock only. Uneven adjustment can cause poor handling and loss of stability, which could lead to an accident.

Following are guidelines to fine-tune suspension. Use suspension adjustment tool provided in the tool kit.

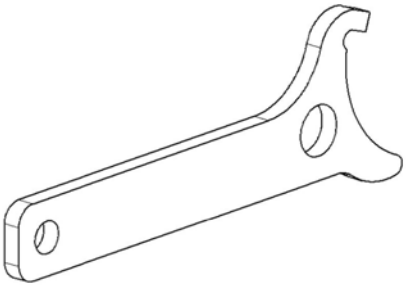

The spring preload affects the ground clearance of the vehicle.

Shorten the springs for a firmer ride and rough conditions.

Lengthen the springs for a softer ride and smooth conditions.

Adjust spring preload by turning the adjuster ring.

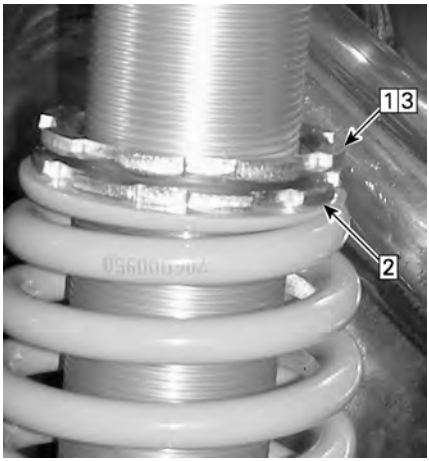

TYPICAL – SHOCK WITH THREADED ADJUSTMENT

1. *Loosen top locking ring*
2. *Turn adjusting ring accordingly*
3. *Tighten top locking ring*

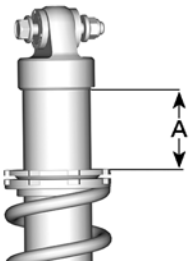

1. *Distance to measure*

DPS Function

The Dynamic Power Steering (DPS) provides a computer controlled, variable power assist, achieved by an electric motor to optimize the amount of steering input required by the rider.

TRANSPORTING THE VEHICLE

When contacting a towing or transporting service, be sure to ask if they have a flatbed trailer, loading ramp or power ramp to safely lift the vehicle and tie-down straps. Ensure the vehicle is properly transported as specified in this section.

NOTICE

Do not tow this vehicle — towing can seriously damage the vehicle's drive system.

NOTICE

Avoid using chains to tie the vehicle — they may damage the surface finish or plastic components.

⚠ WARNING

To avoid severe injury or death or important components damages.

- **Never use the winch cable/ rope to retain a vehicle during trailering.**
- **Never ride with the winch cable/rope attached to a load or another vehicle.**
- **Only use the winch to help a stuck vehicle (snow, mud, etc.).**
- **Always refer to the winch manufacturer's instruction before pulling loads.**

⚠ WARNING

Make sure all accessories, cargo and loose objects inside the vehicle are properly secured, or remove it to prevent from failing on the road and creating a hazard for following vehicles.

⚠ WARNING

Always transport the vehicle facing forward to avoid damaging the windshield or other components. Parts may detach during transport.

⚠ WARNING

Before attempting to mount vehicle onto a platform or a trailer, make sure to respect the following safety precautions.

Safety Precautions	
Carrying equipment	The carrying item (platform or trailer or flat bed) must be of appropriate dimensions and capacity to safely support and transport the vehicle.
Hauling vehicle	Do not exceed vehicle hauling capacity and specifications. Ensure the trailer or platform is properly secured to the hauling vehicle hitch.
Visibility	Ensure you have a good visibility during the entire maneuver.
Terrain	The hauling vehicle and trailer must be on a leveled surface. Use wheel chocks on trailer and hauling vehicle to avoid any movement.
Ramps	Use ramps with proper rating and secure ramps to the trailer or platform. Avoid steep ramps.

Safety Precautions	
Bystanders	Always make sure bystanders are not close to the vehicle or the trailering equipment while climbing up.
Accessories and cargo	Make sure all accessories, cargo and loose objects inside the vehicle are properly secured, or remove it to prevent from failing on the road and creating a hazard for following vehicles.

Using Vehicle Power to Climb Onto Trailering Equipment

When vehicle can climb on its own power, proceed as follows;

1. Wear protective gear.
2. Fasten seat belt.
3. Use low gear only (if equipped).
4. If vehicle has 4WD option, use it.
5. When driving remain seated at all times.
6. Ensure proper alignment on rails or platform.
7. Start from a sufficient distance from the trailer to align the vehicle in a straight line with the ramps. Never attempt to turn while getting closer to the ramp. Rear wheels might not be aligned once you get to the ramp and vehicle may fall off.
8. Slowly climb the front wheels onto the ramp to verify alignment.
9. Back off the vehicle, verify ramps are still secure, then proceed at proper speed.
10. Carefully drive vehicle onto platform or trailer. Use sufficient speed to climb without spinning or abruptly accelerating. Avoid acceleration while on ramps to prevent ramps movement.
11. If trailer is inclined towards front, simply let vehicle roll in without acceleration.
12. Once vehicle is climbed, put shift lever to Park. Apply brake locking mechanism (if equipped).

⚠ CAUTION

When vehicle cannot move on its own power, or in case overshooting is a risk or if any dangerous condition prevents for embarking on its own power, proceed using a winch.

Using a Winch to Pull Vehicle Onto Trailering Equipment

When vehicle cannot climb on its own power, proceed as follows;

⚠ WARNING

Have the help of an assistant. One person should be in vehicle to have access to vehicle steering, brakes and winch switch, while the other person controls the environment and safety of the maneuver.

⚠ WARNING

Ensure the winch hook can be safely attached to a proper anchoring point. Use proper rigging.

NOTE:
If vehicle can be started safely, let engine idle during winching to avoid draining the battery.

1. Place shift lever to NEUTRAL (N).
2. If the vehicle is equipped with a winch, use the winch to roll the vehicle on the platform.
3. If the vehicle is not equipped with a winch, proceed as follows:

1. Attach strap to lower front bumper anchor.
2. Attach the strap to the winch cable of the towing vehicle.
3. Pull the vehicle on the flatbed trailer with the winch.

4. Put shift lever to Park. Apply brake locking mechanism (if equipped).

Securing Vehicle for Transport

⚠ WARNING

Never use the winch to secure the vehicle during transport.

1. Remove the key from the vehicle.
2. At rear, secure the vehicle on both sides using a strap around the suspension arm as close to the wheel as possible.
3. At front, secure the vehicle on both sides using a strap around the lower suspension arm as close to the wheel as possible.

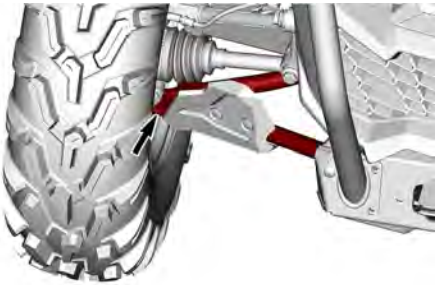

4. Strap the rear tires by using tire towing straps.
5. Firmly attach the rear suspension tie-down straps to both sides of the rear of the trailer with ratchets.
6. Ensure that both the front and rear wheels are firmly attached to the trailer.

Getting Vehicle Out of Trailer

⚠ WARNING

Vehicle may have moved during transport. Ensure vehicle is properly aligned with ramps before proceeding.

⚠ WARNING

Visibility will be greatly reduced when backing off from the trailer. Have the help of an assistant to ensure proper alignment and safe environment.

LIFTING AND SUPPORTING THE VEHICLE

Front of Vehicle

1. Place vehicle on a flat non slippery ground.
2. Ensure vehicle shift lever is set to PARK.
3. Install an hydraulic jack under the front skid plate.
4. Lift front of vehicle and install a jack stand on each side under frame section.

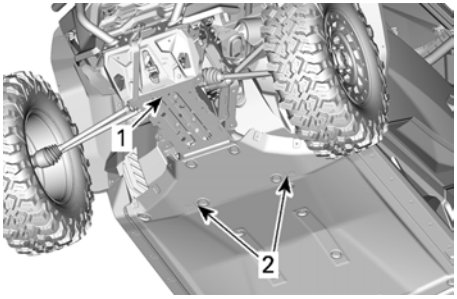

1. Front of vehicle
2. Frame section

5. Lower hydraulic lift and ensure vehicle is supported safely onto both jack stands.

Rear of Vehicle

1. Place vehicle on a flat non slippery ground.
2. Activate 4WD mode.
3. Ensure vehicle shift lever is set to PARK.
4. Install an hydraulic jack under the skid plate.
5. Lift rear of vehicle and install a jack stand on each side under frame section in front of rear wheel.

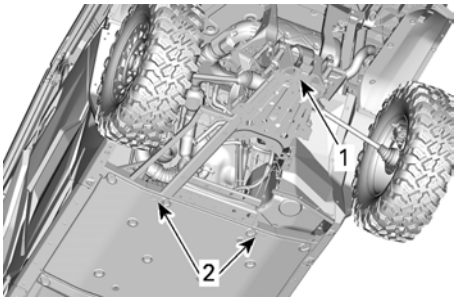

1. Lifting location under skid plate
2. Frame section to install jack stands

6. Lower hydraulic lift and ensure vehicle is supported safely onto both jack stands.

MAINTENANCE

MAINTENANCE SCHEDULE

Maintenance is very important to keep your vehicle in safe operating condition. The vehicle should be serviced as per the maintenance schedule.

Proper maintenance is the owner's responsibility. A warranty claim may be denied if, among other things, the owner or operator caused the problem through improper maintenance or use.

Perform periodic checks and follow the maintenance schedule. **The maintenance schedule does not exempt the pre-ride inspection**.

⚠ WARNING

Failure to properly maintain the vehicle according to the maintenance schedule and procedures can make it unsafe to operate.

EPA Regulation - Canadian and USA Vehicles

A repair shop or person of the owner's choosing may maintain, replace, or repair emission control devices and systems. These instructions do not require components or service by BRP or authorized Can-Am Off-road dealers.

Although an authorized Can-Am Off-road dealer has an in-depth technical knowledge and tools to service your vehicle, the emission-related warranty is not conditioned on the use of an authorized Can-Am Off-road dealer or any other establishment with which BRP has a commercial relationship.

Proper maintenance is the owner's responsibility. A warranty claim may be denied if, among other things, the owner or operator caused the problem through improper maintenance or use.

For emission-related warranty claims, BRP is limiting the diagnosis and repair of emission-related parts to the authorized Can-Am Off-road dealers. For more information, please refer to the *US EPA Emission-Related Warranty* contained in the *Warranty* section.

You must follow the instructions for fuel requirements in the fueling section of this manual. Even if gasoline containing greater than ten volume percent ethanol is readily available, the US EPA issued a prohibition against the use of gasoline containing greater than 10 vol% ethanol that applies to this vehicle. The use of gasoline containing greater than 10 vol% ethanol with this engine may harm the emission control system.

Air Filter Maintenance Guideline

Air filter maintenance should be adjusted according to riding conditions.

Air filter maintenance must be increased in frequency when riding on snow, dry sand, dirt, gravel or similar conditions which have a high dust or particle dispersion.

Riding in a group in these conditions will require increasing the air filter maintenance frequency further.

NOTE:
Accessory filters and pre-filter are available for such conditions. Contact an authorized Can-Am off-road dealer for details.

Severe Duty Use

If your vehicle is used in the following conditions, refer to the *Severe Duty* section of the maintenance schedule.

- Repeated hauling of loads at more than 75% the maximum capacity.
  - The increase workload applied to the drive system accelerates the differentials, gearbox/transmission, and engine oil life. This reduces internal component longevity if not replaced more frequently.
- Driving at excessive speeds for prolonged amount of time.

Commercial/work and rental vehicles must also use the *Severe Duty* maintenance schedule.

Higher than the average use requires more frequent fluid and wear component replacement than trail, recreational, or occasional utility purposes.

Extreme Cold Condition

An engine that is frequently operated at or below an ambient temperature of -25 ° C (-13 °F) will require an increase in service and maintenance schedule.

Any combustion engine operated at these low ambient temperature will collect an increased amount of condensation at every startup/warm-up.

Since the engine is not reaching operating temperatures for extended periods of time, the oil is starting to be strongly diluted with water and gas residue (more water content).

An engine needs to reach operating temperature, in order to be able to evaporate condensate out of the oil.

If daily usage (work or leisure driving cycle) is similar to those mentioned below, BRP strongly recommends changing the oil at least once a month.

Parameters of an increase in service and maintenance schedule:

- Engine not reaching the proper operating temperature during normal daily usage
- Multiple starts and stops without reaching operating temperature
- Short idle periods
- Low RPM driving cycle in short distances without reaching operating temperature.

NOTE:
BRP strongly recommends the installation of a block heater to help warm up the liquids, this will also help to extend the oil lifetime.

Deep Mud / Water Use

Whether your vehicle is a X mr model or was accessorized for deep mud / water use, this type of usage requires more frequent maintenance and inspections to ensure debris has not infiltrated mechanical components.

If you regularly ride in deep mud or water, refer to the *Deep Mud / Water* section of the maintenance schedule.

After every ride, be sure to perform the *Post Operation Care for Deep Mud / Water Environment* .

Post Operation Care for Deep Mud / Water Environment

– Rinse the vehicle and its components with fresh water.
– Clean the CVT air filters.
– Drain the CVT compartment and clean if any water or mud is found.
– Inspect and clean engine air filters and engine air filter housing.
– Clean debris around exhaust pipe and muffler area and the spark arrester.
– Clean radiator.
– Visually inspect for any water accumulation in the vent hoses (fuel tank, gearbox, front differential and rear final drive). If there is water, bring the vehicle to your nearest authorized Can-Am off-road dealer for inspection and servicing of main components related to the vents.
– Clean front and rear shock absorbers to prevent seal from damage by dust or dirt.
– Clean drive shaft bellows and the propeller shaft yokes or boots.

Maintenance Schedule

Make sure to perform proper maintenance at recommended intervals as indicated in the tables.

The maintenance chart intervals are based on 3 factors:

– Calendar time
– Vehicle hours
– Odometer reading.

Take in account whichever comes first to determine the maintenance threshold.

Your driving habits determines the factors you shall adhere too. For example:

– Someone who uses their vehicle every other weekend trail riding with friends would most likely follow the **odometer reading** to determine the maintenance interval.
– Someone who uses their vehicle seldomly over the year or only on a few occasions (hunting, camping) would most likely follow the **calendar time** to determine the maintenance interval.
– Someone who uses their vehicle daily / weekly for long periods of time such as agricultural / work would most likely follow the **vehicle hours** to determine the maintenance interval.

IMPORTANT: The following tables show the appropriate maintenance application for the first 3 years. For subsequent years, repeat the same pattern alternatively.

Regular Maintenance Overview			
Calendar Years	**Vehicle Hours**	**Odometer**	**Regular Duty**
1	200	3000 km (1900 mi)	**A**
2	400	6000 km (3700 mi)	**A** and **B**
3	600	9000 km (5600 mi)	**A**

Severe Duty and Mud/Water Maintenance Overview			
Calendar Years	**Vehicle Hours**	**Odometer**	**Severe Duty and Deep Mud / Water**
0.5	100	1500 km (900 mi)	**A+**
1	200	3000 km (1900 mi)	**A+** and **A**
1.5	300	4500 km (2800 mi)	**A+**
2	400	6000 km (3700 mi)	**A+** and **A** and **B**
2.5	500	7500 km (4700 mi)	**A+**
3	600	9000 km (5600 mi)	**A+** and **A**

REGULAR DUTY	A	B
A = Adjust **C = Clean** **I = Inspect** **L = Lubricate** **R = Replace** **T = Tighten**	**Every year or 200 hours or 3000 km (1900 mi)**	**Every 2 years or 400 hours or 6000 km (3700 mi)**
Air and Fuel Delivery		
Engine air filter	**I, C** or **R**	
Air delivery components and function (airbox, throttle body, ducts, clamps)*	**I, C**	
Fuel components and function (Fuel tank cap, fuel tank, hoses, clamps, leaks)*	**I**	
Fuel pump pressure		**I**
Body, Chassis and Accessories		
Cage fasteners	**T**	
Seat belts retractors, buckles and semi-cinching	**I, C**	
Winch	**I, C**	
Windshield hinge screws (if equipped)	**T**	
Door latches, hinges and key barrels	**L, T**	
Power tilt bed hydraulic cylinder spherical bearing (If equipped)	**L**	
Engine and Cooling		
Engine oil and filter	**R**	
Valve clearance (Regardless of calendar time)	**I, A** (V-twin engines)	**I, A** (Mono cyl. engines)
Spark plugs (Regardless of calendar time)		**R**
Engine seals and gaskets	**I**	
Engine cooling components (Coolant concentration, coolant level, hoses condition, clamps, leaks)*	**I, A**	
Engine coolant	**R** Every 5 years or 12 000 km (7500 mi)	
Radiator	**C**	
Exhaust and Emissions		
Exhaust components (gaskets, pipes, muffler condition, leaks)*	**I**	

REGULAR DUTY	A	B
A = Adjust C = Clean I = Inspect L = Lubricate R = Replace T = Tighten	**Every year or 200 hours or 3000 km (1900 mi)**	**Every 2 years or 400 hours or 6000 km (3700 mi)**
Fuel tank vent breather filter (Non EVAP models)	**R**	
Canister vent pre-filter (CARB and EVAP models)		**R**
Muffler spark arrester	**C**	
Debris around exhaust pipe and muffler area	**C**	
HVAC		
Air filter	**I, C**	
Heating and air conditioning components and function*	**I, C**	
Air conditioning compressor belt		**I**
Brake		
Brake components and function (Oil level, brake pads, brake discs, calipers, brake lines and master cylinder)*	**I, C, L, A**	
Brake fluid	**R** Every 2 years	
Drive		
Gearbox oil	Replace at first 3000 km (1900 mi) and at 6000 km (3700 mi), then follow the regular schedule	
Gearbox oil	**I, A**	**R**
Front differential oil	**I, A**	**R**
Rear final drive oil (Mono-cyl. engine)	**I, A**	**R**
Middle and rear differential oil (6x6 models)	**I, A**	**R**
Tires (Wear, pressure)	**I, A**	
Wheel lug nuts	**T**	
Wheel beadlock bolts (if equipped)	**T**	
Drive components and function*	**I**	
Controls		
Gearbox position lever operation	**I, A**	

REGULAR DUTY	A	B
A = Adjust **C = Clean** **I = Inspect** **L = Lubricate** **R = Replace** **T = Tighten**	**Every year or 200 hours or 3000 km (1900 mi)**	**Every 2 years or 400 hours or 6000 km (3700 mi)**
Throttle operation	**I**	
Continuously Variable Transmission (CVT)		
CVT components (air filter, drive and driven pulley cleaning, drive belt, drive pulley rollers and hub bearing)*	**I, C,** L	
Rollers in driven pulley	**I**	
Electrical		
Battery connections and condition	**I, C**	
Fault codes module and applicable software updates	**I**	
Operation of controls switches and lighting*	**I**	
Vehicle speed sensor (VSS)		**C**
Steering		
Steering components and function*	**I**	
Suspension		
Suspension components and function*	**I, C,** L, **T**	
Stabilizer bar and A-arm bushings (Models without double-bonded bushing)	**I, L** Recommended at every 1000 km (620 mi)	

* For an extensive list of maintenance actions to be performed, refer to your local dealership.

SEVERE DUTY	A+	A	B
A = Adjust **C = Clean** **I = Inspect** **L = Lubricate** **R = Replace** **T = Tighten**	**Every 6 months or 100 hours or 1500 km (900 mi)**	**Every year or 200 hours or 3000 km (1900 mi)**	**Every 2 years or 400 hours or 6000 km (3700 mi)**
Air and Fuel Delivery			
Engine air filter	**I, C**	**R**	
Air delivery components and function (airbox, throttle body, ducts, clamps)*	**I, C**		
Fuel components and function (Fuel tank cap, fuel tank, hoses, clamps, leaks)*		**I**	
Fuel pump pressure			**I**
Body, Chassis and Accessories			
Cage fasteners		**T**	
Seat belts retractors, buckles and semi-cinching		**I, C**	
Winch	**I, C**		
Windshield hinge screws		**T**	
Door latches, hinges and key barrels		**L, T**	
Power-tilt bed hydraulic cylinder spherical bearing (If equipped)		**L**	
Engine and Cooling			
Engine oil and filter	**R**		
Valve clearance (Regardless of calendar time)		**I, A** (V-twin engines)	**I, A** (Mono cyl. engines)
Spark plugs (Regardless of calendar time)			**R**
Engine seals and gaskets		**I**	
Engine cooling components (Coolant concentration, coolant level, hoses condition, clamps, leaks)*		**I, A**	
Engine coolant	**R** Every 5 years or 12 000 km (7500 mi)		
Radiator		**C**	

SEVERE DUTY	A+	A	B
A = Adjust **C = Clean** **I = Inspect** **L = Lubricate** **R = Replace** **T = Tighten**	**Every 6 months or 100 hours or 1500 km (900 mi)**	**Every year or 200 hours or 3000 km (1900 mi)**	**Every 2 years or 400 hours or 6000 km (3700 mi)**
Exhaust and Emissions			
Fuel tank vent breather filter (Non EVAP models)		**R**	
Canister vent pre-filter (CARB and EVAP models)			**R**
Exhaust components (gasket, pipes, muffler condition, leaks)*		**I**	
Muffler spark arrester	**C**		
Debris around exhaust pipe and muffler area	**C**		
HVAC			
Air filter	**I, C**		
Heating and air conditioning components and function*		**I, C**	
Air conditioning compressor belt			**I**
Brake			
Brake components and function (Oil level, brake pads, brake discs, calipers, brake lines and master cylinder)*	**I, C, A**	**C, L**	
Brake fluid	**R** Every 2 years		
Drive			
Gearbox oil and filter	Replace at first 1500 km (900 mi) and at 3000 km (1900 mi), then follow the regular schedule		
Gearbox oil and filter	**I, A**	**R**	
Front differential oil	**I, A**	**R**	
Rear final drive oil (Mono-cyl. engine)	**I, A**	**R**	
Middle and rear differential oil	**I, A**	**R**	
Tires (Wear, pressure)	**I, A**		
Wheel lug nuts	**T**		

SEVERE DUTY	A+	A	B
A = Adjust **C = Clean** **I = Inspect** **L = Lubricate** **R = Replace** **T = Tighten**	**Every 6 months or 100 hours or 1500 km (900 mi)**	**Every year or 200 hours or 3000 km (1900 mi)**	**Every 2 years or 400 hours or 6000 km (3700 mi)**
Wheel beadlock bolts (if equipped)		**T**	
Drive components and function*	**I**		
Controls			
Gearbox position lever operation		**I, A**	
Throttle operation		**I**	
Continuously Variable Transmission (CVT)			
CVT components (air filter, drive and driven pulley cleaning, drive belt, drive pulley rollers and hub bearing)*		**I, C, L**	
Rollers in driven pulley		**I**	
Electrical			
Battery connections and condition		**I, C**	
Fault codes module and applicable software updates		**I**	
Operation of controls switches and lighting*		**I**	
Vehicle speed sensor (VSS)		**C**	
Steering			
Steering components and function*	**I**		
Suspension			
Suspension components and function*	**I, C, L**	**T**	
Stabilizer bar and A-arm bushings (Models without double-bonded bushings)	**I, L** Recommend-ed at every 1000 km (620 mi)		

* For an extensive list of maintenance actions to be performed, refer to your local dealership.

DEEP MUD / WATER	A+	A	B
A = Adjust **C = Clean** **I = Inspect** **L = Lubricate** **R = Replace** **T = Tighten**	**Every 6 months or 100 hours or 1500 km (900 mi)**	**Every year or 200 hours or 3000 km (1900 mi)**	**Every 2 years or 400 hours or 6000 km (3700 mi)**
Air and Fuel Delivery			
Engine air filter	**I, C**	**R**	
Air delivery components and function (airbox, throttle body, ducts, clamps)*	**I, C**		
Fuel components and function (Fuel tank cap, fuel tank, hoses, clamps, leaks)*		**I**	
Fuel pump pressure			**I**
Body, Chassis and Accessories			
Cage fasteners		**T**	
Seat belts retractors, buckles and semi-cinching		**I, C**	
Winch	**I, C**		
Windshield hinge screws		**T**	
Door latches, hinges and key barrels		**L, T**	
Power tilt bed hydraulic cylinder spherical bearing (If equipped)		**L**	
Engine and Cooling			
Engine oil and filter	**I, A**	**R**	
Valve clearance (Regardless of calendar time)		**I, A** (V-twin engines)	**I, A** (Mono cyl. engines)
Spark plugs (Regardless of calendar time)			**R**
Engine seals and gaskets		**I**	
Engine cooling components (Coolant concentration, coolant level, hoses condition, clamps, leaks)*		**I, A**	
Engine coolant	**R** Every 5 years or 12 000 km (7500 mi)		
Radiator	**C**		

DEEP MUD / WATER	A+	A	B
A = Adjust **C = Clean** **I = Inspect** **L = Lubricate** **R = Replace** **T = Tighten**	**Every 6 months or 100 hours or 1500 km (900 mi)**	**Every year or 200 hours or 3000 km (1900 mi)**	**Every 2 years or 400 hours or 6000 km (3700 mi)**
Exhaust and Emissions			
Fuel tank vent breather filter (Non EVAP models)		**R**	
Canister vent pre-filter (CARB and EVAP models)			**R**
Exhaust components (gasket, pipes, muffler condition, leaks)*	**I**		
Muffler spark arrester	**C**		
Debris around exhaust pipe and muffler area	**C**		
HVAC			
Air filter	**I, C**		
Heating and air conditioning components and function*		**I, C**	
Air conditioning compressor belt	**I**		
Brake			
Brake components and function (Oil level, brake pads, brake discs, calipers, brake lines and master cylinder)*	**I, C, A**	**C, L**	
Brake fluid	**R** Every 2 years		
Drive			
Gearbox oil and filter	Replace at first 1500 km (900 mi) and at 3000 km (1900 mi), then follow the regular schedule		
Gearbox oil and filter	**I, A**		**R**
Front differential oil	**I, A**		**R**
Rear final drive oil (Mono-cyl. engine)	**I, A**		**R**
Middle and rear differential oil	**I, A**		**R**
Tires (Wear, pressure)	**I, A**		
Wheel lug nuts	**T**		

DEEP MUD / WATER	A+	A	B
A = Adjust **C = Clean** **I = Inspect** **L = Lubricate** **R = Replace** **T = Tighten**	**Every 6 months or 100 hours or 1500 km (900 mi)**	**Every year or 200 hours or 3000 km (1900 mi)**	**Every 2 years or 400 hours or 6000 km (3700 mi)**
Wheel beadlock bolts (if equipped)		**T**	
Drive components and function*	**I**		
Controls			
Gearbox position lever operation		**I, A**	
Throttle operation	**I**		
Continuously Variable Transmission (CVT)			
CVT components (air filter, drive and driven pulley cleaning, drive belt, drive pulley rollers and hub bearing)*		**I, C, L**	
Rollers in driven pulley		**I**	
Electrical			
Battery connections and condition		**I, C**	
Fault codes module and applicable software updates		**I**	
Operation of controls switches and lighting*		**I**	
Vehicle speed sensor (VSS)		**C**	
Steering			
Steering components and function*	**I**		
Suspension			
Suspension components and function*	**I, C, L**	**T**	
Stabilizer bar and A-arm bushings (Models without double-bonded bushings)	**I, L** Recommend-ed at every 1000 km (620 mi)		

* For an extensive list of maintenance actions to be performed, refer to your local dealership.

Maintenance Records

Send photocopy of maintenance record to BRP if needed.

Pre-delivery	
Serial number: _____ Mileage / km: _____ Hours: _____ Date: _____ Dealer no: _____ Notes: _____	Signature/Print:
Refer to vehicle Pre-Delivery Bulletin for detailed installation procedures	

FIRST inspection	
Mileage / km: _____ Hours: _____ Date: _____ Dealer no: _____ Notes: _____	Signature/Print:
For maintenance schedule refer to Maintenance Information section of this operator's guide	

Service	
Mileage / km:	Signature/Print:
Hours:	
Date:	
Dealer no:	
Notes:	
For maintenance schedule refer to Maintenance Information section of this operator's guide	

Service	
Mileage / km:	Signature/Print:
Hours:	
Date:	
Dealer no:	
Notes:	
For maintenance schedule refer to Maintenance Information section of this operator's guide	

Service	
Mileage / km:	Signature/Print:
Hours:	
Date:	
Dealer no:	
Notes:	
For maintenance schedule refer to Maintenance Information section of this operator's guide	

Service	
Mileage / km:	Signature/Print:
Hours:	
Date:	
Dealer no:	
Notes:	
For maintenance schedule refer to Maintenance Information section of this operator's guide	

Service	
Mileage / km:	Signature/Print:
Hours:	
Date:	
Dealer no:	
Notes:	
For maintenance schedule refer to Maintenance Information section of this operator's guide	

Service	
Mileage / km:	Signature/Print:
Hours:	
Date:	
Dealer no:	
Notes:	
For maintenance schedule refer to Maintenance Information section of this operator's guide	

Service	
Mileage / km:	Signature/Print:
Hours:	
Date:	
Dealer no:	
Notes:	
For maintenance schedule refer to Maintenance Information section of this operator's guide	

Service	
Mileage / km:	Signature/Print:
Hours:	
Date:	
Dealer no:	
Notes:	
For maintenance schedule refer to Maintenance Information section of this operator's guide	

Service	
Mileage / km:	Signature/Print:
Hours:	
Date:	
Dealer no:	
Notes:	
For maintenance schedule refer to Maintenance Information section of this operator's guide	

Service	
Mileage / km:	Signature/Print:
Hours:	
Date:	
Dealer no:	
Notes:	
For maintenance schedule refer to Maintenance Information section of this operator's guide	

Service	
Mileage / km:	Signature/Print:
Hours:	
Date:	
Dealer no:	
Notes:	
For maintenance schedule refer to Maintenance Information section of this operator's guide	

Service	
Mileage / km:	Signature/Print:
Hours:	
Date:	
Dealer no:	
Notes:	
For maintenance schedule refer to Maintenance Information section of this operator's guide	

MAINTENANCE PROCEDURES

This section includes instructions for basic maintenance procedures.

Due to the complexity of some of the maintenance procedures, good mechanical skills are required. If you are not comfortable with these procedures, do not hesitate to contact an authorized Can-Am off-road dealer, repair shop or person of your own choosing.

⚠ WARNING

Unless otherwise indicated, always turn ignition switch to the OFF position before performing any maintenance and remove key.

⚠ WARNING

Should removal of a locking device be required (e.g. lock tab, self-locking fastener, etc.) , always replace it with a new one.

Accessing Maintenance Components

Front Service Cover

To open the front service cover, pull up on handle toward the front.

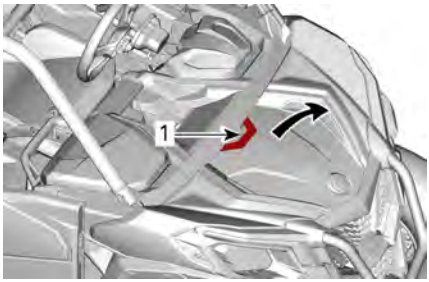

1. Handle

It is very important to follow the steps shown to close the front service cover.

1. Locate the trim clips under the service cover.

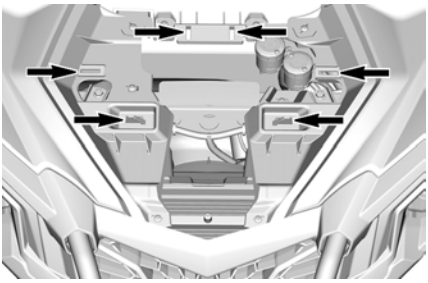

2. Align the BRP logo with the locating dowel.

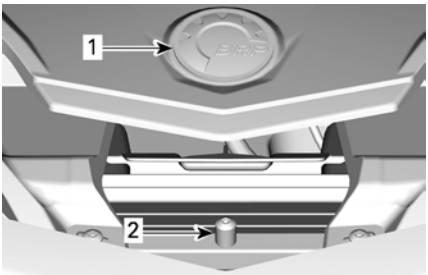

1. BRP logo
2. Locating dowel pin

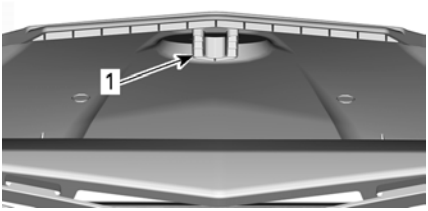

1. Locating slot on underside of service cover

3. Slide the front edge of the service cover under the front fascia.
4. Push down cover making sure all the tabs are fully seated.

Engine Service Cover

The engine service cover gives an access to the following components:

– Engine oil filter
– Engine front spark plug.

1. Remove the seats.

NOTE: On MAX models, remove the rear passenger seats.

2. Remove the plastic rivets and the dart.
3. Remove the engine service cover.

NOTE:
If installed, no need to remove the acoustic panel from the engine service cover.

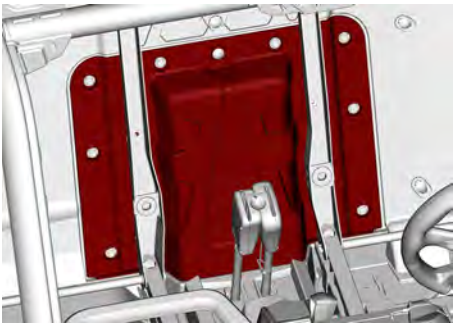

4. The installation is the reverse of the removal procedure.

Seat Cushion and Backrest

1. Remove the seat cushion by lifting the front up and pulling toward the front.

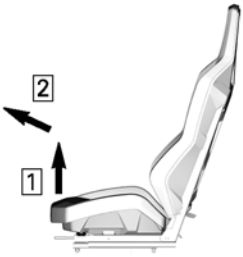

1. Lift front of seat
2. Pull toward the front

2. Remove the backrest by pulling the lower part toward the front and lifting up.

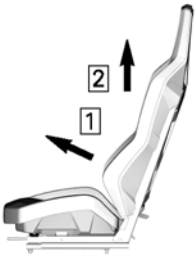

1. Pull toward the front
2. Lift

Rear Body Module

To remove the rear body module;

1. Remove cargo box retaining screws.

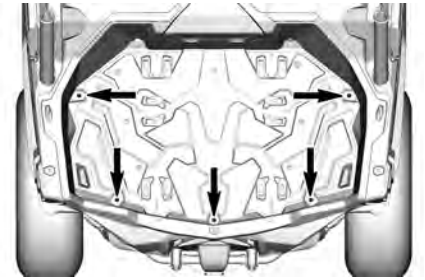

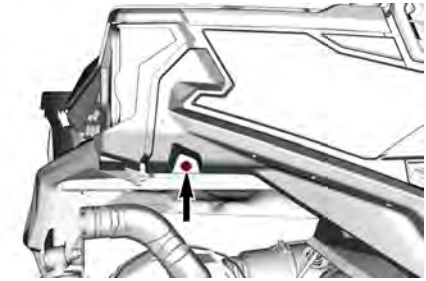

RH SIDE SHOWN, REPEAT ON LH SIDE

TYPICAL

2. On RH side, remove air filter access cover and side panel.

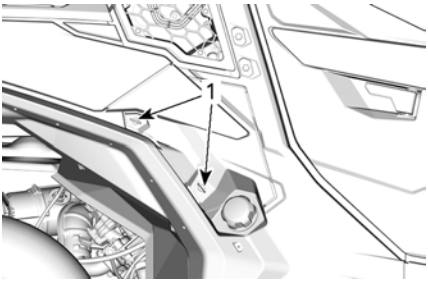

TYPICAL

1. *Quarter turn fasteners*

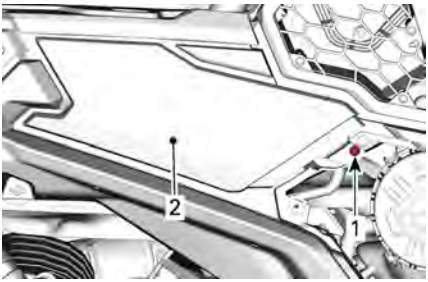

1. *Plastic rivet*
2. *Side panel*

3. On LH side, remove side panel.

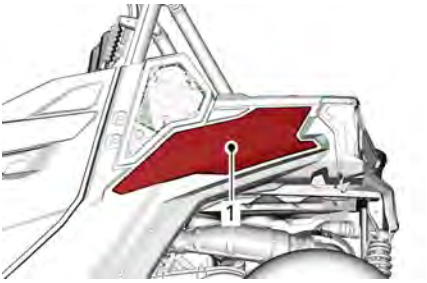

TYPICAL

1. *Side panel*

4. On both sides, disconnect rear lights electrical connectors and remove the rear cage extensions.

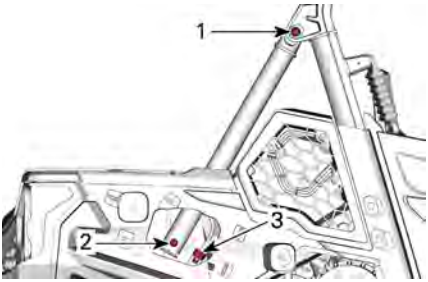

TYPICAL

1. *Cage extension upper screw*
2. *Cage extension lower screw*
3. *Electrical connector*

5. Lift rear body module.

TYPICAL

6. At installation, tighten all screws to specifications.

Tightening Torque	
Cargo box retaining screw	2.5 ± 0.5 Nm (22 ± 4 lbf-in)
Upper cage extension screw	24.5 ± 3.5 Nm (18 ± 3 lbf-ft)
Lower cage extension screw	

ENGINE AIR FILTER

NOTICE

Never modify the air intake system. Otherwise, engine performance degradation or damage can occur. The engine is calibrated to operate specifically with these components.

Engine Air Filter Replacement Guideline

Engine air filter inspection and replacement frequency should be adjusted according to riding conditions as it is critical to ensure proper engine performance and life span.

Engine air filter inspection and replacement frequency must be increased for the following severe riding conditions:

- Riding on dry sand.
- Riding on dry dirt covered surfaces.
- Riding on dry gravel trails or similar conditions.
- Riding in areas with high concentration of seeds or crop husks.
- Riding in severe snow conditions.

NOTICE

When riding in dusty conditions or sand, the air box needs to be cleaned before every ride.

NOTE:
Riding in a group, under these conditions, increases the frequency of the air filter maintenance.

Removing the Engine Air Filter

Remove side access cover by unscrewing the quarter turn fasteners.

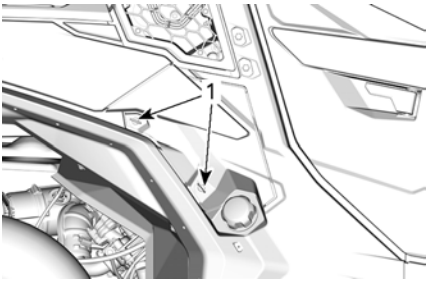

1. Quarter turn fasteners

Unlatch air filter cover and remove air filter.

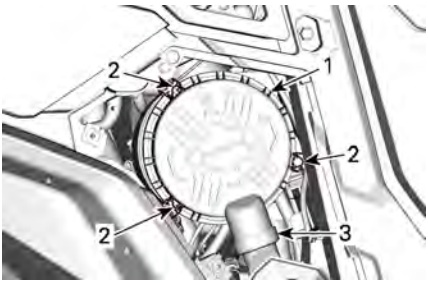

TYPICAL - RH SIDE OF VEHICLE, UNDER CARGO BOX

1. Air filter cover
2. Latches
3. Duck bill valve

The filter fits tightly over the outlet tube and there will be some initial resistance. Gently move the end of the filter back and forth to break the seal, then rotate while pulling straight out.

Avoid knocking the filter against the housing.

Cleaning the Engine Air Filter

1. Inspect the filter for any signs of leaks. A streak of dust on the clean side of the filter is a telltale sign. Replace filter if there is any damages. Eliminate any source of air leaks before installing a new filter.
2. Clean engine air filter by tapping out heavy dust from paper element, this will allow dirt and dust to get out of the paper filter.

NOTICE

It is not recommended to blow compressed air on the paper element; this could damage the paper fibers and reduce its filtration ability when used in dusty environments. If engine air filter is too dirty and cannot be cleaned following the recommended procedure, it should be replaced.

3. Inspect air filter housing for cleanliness. Clean if necessary.
4. Use a clean damp cloth to wipe both the filter sealing surface and the inside of the inlet tube. Ensure that the inlet tube sealing area is undamaged.

Duckbill Valve Cleaning

Installing the Engine Air Filter

1. Insert the filter carefully.
    1. Seat the filter by hand, making certain it is inserted completely into the air cleaner housing.
    2. Apply pressure by hand on the outer rim of the filter, not the flexible center.
2. Inspect and carefully clean gasket in the groove of the cover. Replace if damaged.
3. Secure air filter cover with latches.

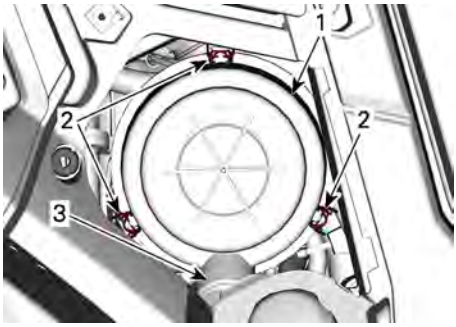

1. *Air filter cover*
2. *Latches*
3. *Duckbill valve*

4. Reinstall the air filter access door and secure it with the quarter-turn screw.

CVT Air Filter

CVT Air Filter Replacement Guideline

CVT air filter inspection and replacement frequency should be adjusted according to riding conditions as it is critical to ensure proper engine performance and life span.

Under the following severe riding conditions, the inspection and replacement frequency must be increased:

– Riding on dry sand.
– Riding on dry dirt covered surfaces.
– Riding on dry gravel trails or similar conditions.
– Riding in muddy conditions.
– Riding in areas with high concentration of seeds or crop husks.

– Riding in severe snow conditions.

NOTICE

When riding in dusty conditions or sand, the air filter needs to be cleaned before every ride.

NOTE:
Riding in a group, under these conditions, increases the frequency of the air filter maintenance.

Removing the CVT Air Filter

1. Remove fasteners

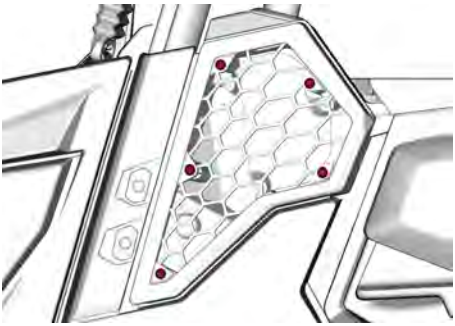

2. Remove the CVT air filter.

Inspecting and Cleaning the CVT Air Filter

1. Inspect filter and replace if damaged.
2. Remove the seals.
3. Clean filter and seals using a solution of soft soap and water, then rinse.
4. Gently shake off excess water and allow filter and seals to dry at room temperature.
5. Clean inside the CVT air inlet with a vacuum cleaner.

Installing the CVT Air Filter

1. Install seals in CVT filter. Make sure the upper ends of the seals touch and there is a gap at the bottom to allow water to drain.

   1. Seal touching
   2. Gap
2. Reinstall CVT air filter.
3. Reinstall fasteners.

Tightening Torque	
CVT air filter retaining screw	3.5 ± 0.5 Nm (31 ± 4 lbf-in)

Evaporative Emission System Pre-Filter (If Equipped)

Evaporative Emission System Pre-Filter Replacement

1. Remove rear body module, refer to *Accessing Maintenance Components*.
2. On LH side, remove side panel.
3. Remove the hose clamps.
4. Remove the retaining screws.
5. Remove the pre-filter assembly.

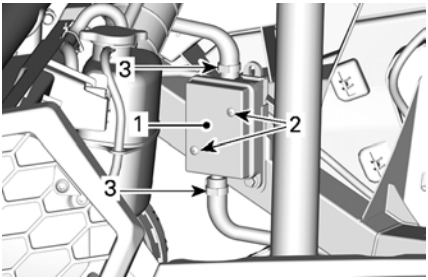

1. *Pre-Filter*
2. *Retaining screw*
3. *Clamps*

6. Install a new pre-filter assembly.

Tightening Torque	
Pre-filter retaining screw	2.5 ± 0.5 Nm (22 ± 4 lbf-in)

7. Secure hoses with clamps.
8. Install all other removed parts.

ENGINE OIL

Recommended Engine Oil

Rotax® engines were developed and validated using the XPS® oil.

BRP recommends the use of its XPS engine oil or an equivalent at all time.

Damage caused by the use of an oil not suitable for the engine may not be covered by the BRP Limited Warranty.

XPS Recommended Engine Oil	
General purpose	5W40 synthetic oil
Cold temperature	0W40 synthetic oil
Warm temperature	10W50 synthetic oil

If the recommended XPS engine oil is not available:

– Use a 4-stroke SAE engine synthetic oil meeting or exceeding the following lubricant industry specifications.
– Always check the API service label certification on the oil container, it must contain at least one of the indicated standards.
  – **API service classification SN, or**
  – **JASO MA2**

Verifying the Engine Oil Level (V-Twin)

NOTICE

Operating the engine with an improper level may severely damage engine.

NOTICE

Check the oil level when the engine is COLD.

1. Place vehicle on a level surface.
2. Clean around dipstick to avoid foreign particles falling down the tube.

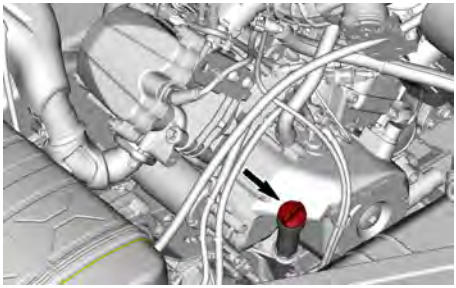

3. Unscrew dipstick then remove it and wipe clean.
4. Reinstall dipstick, screw in it completely.
5. Remove dipstick and check oil level. It should be near or equal to the upper mark.

1. MIN
2. MAX

If the level is between marks, reinstall the dipstick.

If the level is below the lower mark, add oil as follow:

– Place a funnel into the dipstick hole.

- Add a small amount of recommended oil and recheck oil level.
- Continue to add oil until the level reaches the upper mark.

NOTICE

Do not overfill. Wipe off any spillage.

Changing the Engine Oil

NOTICE

Engine oil and oil filter must be replaced at the same time.

Oil change and oil filter replacement should be done with a warm engine.

⚠ CAUTION

The engine oil can be very hot. Wait until engine oil is warm.

1. Place the vehicle on a level surface.
2. Clean the dipstick area.
3. Remove the dipstick.
4. Place a drain pan under the engine drain plug area.
5. Clean the drain plug area.
6. Unscrew drain plug and discard the gasket ring.

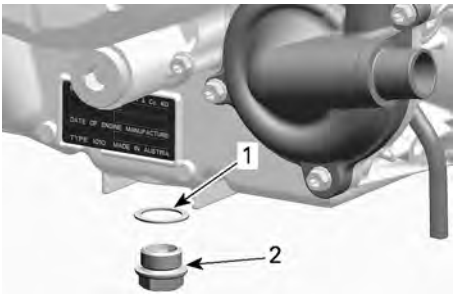

1. *Gasket ring (discard)*
2. *Drain plug*

7. Allow oil to drain completely from the crankcase.
8. Replace oil filter, refer to *Oil Filter*.
9. Clean the magnetic drain plug from metal shavings and residue.

NOTE: Presence of debris gives an indication of internal engine damage.

10. Install a NEW gasket ring on the drain plug.

NOTICE

Never use the gasket ring a second time. Always replace with a new one.

11. Install and tighten drain plug to the recommended specification.

Tightening Torque	
Drain plug	30 ± 2 Nm (22 ± 1 lbf-ft)

12. Refill engine, refer to *Recommended Engine Oil*.

NOTE:
For engine oil capacity, refer to *Technical Specifications*.

13. Start engine and let it idle for a 60 seconds.
14. Stop engine.
15. Check the oil level immediately, refer to *Verifying the Engine Oil Level*.
16. Refill as necessary.
17. Ensure oil filter and drain plug areas are not leaking.
18. Dispose oil and filter as per your local environmental regulations.

OIL FILTER

Removing the Oil Filter

1. If not already done, remove the engine service cover.
2. Clean oil filter area.

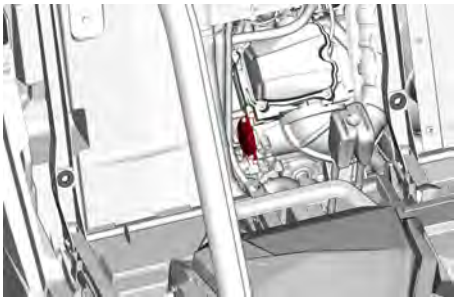

3. Remove oil filter cover.
4. Remove and discard oil filter.

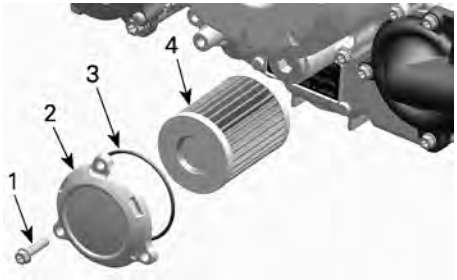

TYPICAL

1. *Oil filter screw*
2. *Oil filter cover*
3. *O-ring*
4. *Oil filter*

Installing the Oil Filter

1. Check and clean the oil filter inlet and outlet area for dirt and other contaminations.

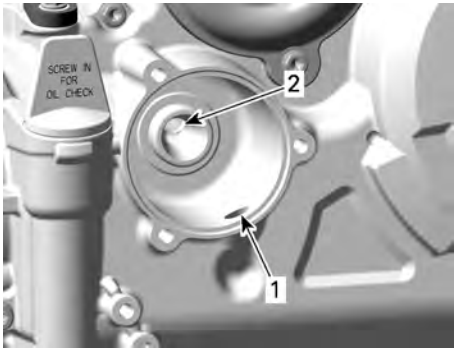

1. *Inlet bore from the oil pump to the oil filter*
2. *Outlet bore to the engine oil providing system*

2. Wet a NEW O-ring with engine oil and slip onto oil filter cover.
3. Install the new filter into the cover.
4. Apply engine oil to the seal on the open end of the oil filter.

1. *Slightly oil*
2. *Slightly oil*

NOTICE

Pay attention to avoid pinching the O-ring during filter and cover installation.

5. Install the cover on the engine.
6. Tighten oil filter cover screws to recommended specification.

Tightening Torque	
Oil filter cover screws	10 ± 1 Nm (89 ± 9 lbf-in)

7. Wipe off any oil spillage on engine.

RADIATOR

Inspecting and Cleaning the Radiator

Periodically check the radiator area for cleanliness.

1. To access radiator, pull lower part of front grille and slide it down.

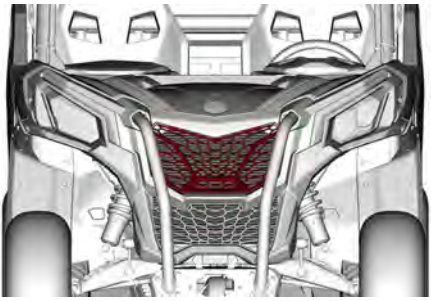

2. Inspect radiator and hoses for leaks or any damage.
3. Inspect radiator fins. They must be clean, free of mud, dirt, leaves and any other deposit that would prevent the radiator to cool properly.

   If available, use a garden hose to rinse the radiator fins.

⚠ CAUTION

Never clean radiator with your hands when it is hot. Let the radiator cool down before cleaning.

NOTICE

Be careful not to damage the radiator fins when cleaning. Do not use any object/tool that could damage the fins. When hosing, use low pressure only. Never use a HIGH PRESSURE washer.

ENGINE COOLANT

Recommended Engine Coolant

1. XPS recommended coolant

XPS Extended life pre-mixed coolant

Alternative, or if the XPS product is not available.

– Distilled water and antifreeze solution (50% distilled water, 50% antifreeze)

NOTICE

Always use ethylene-glycol anti-freeze containing corrosion inhibitors specifically for internal combustion aluminum engines.

Verifying the Engine Coolant Level

⚠ WARNING

Check coolant level with engine cold.

1. Place vehicle on a level surface.
2. Remove the coolant tank access cover.

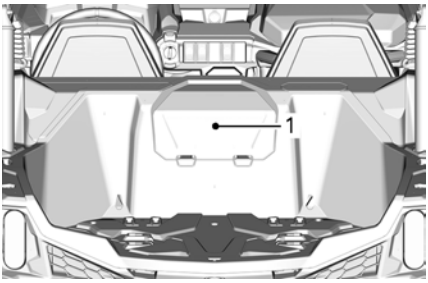

1. Coolant tank access cover

⚠ WARNING

In order to avoid potential burns, do not remove the pressure cap or loosen the coolant drain plug if the engine is hot.

3. Ensure cooling system is full up to the Max line.

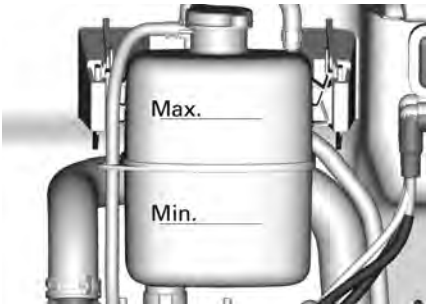

Adding Coolant

1. Remove the coolant tank pressure cap.

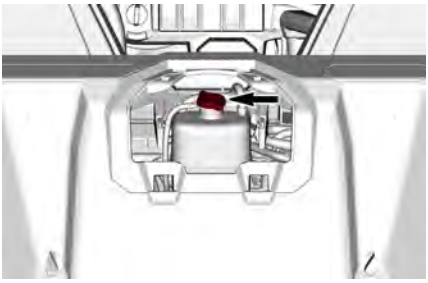

2. Add coolant in system as necessary. Use a funnel to avoid spillage. **Do not overfill**.
3. Properly reinstall pressure cap on cooling tank.
4. Reinstall cooling tank access cover.

NOTE:
A cooling system that frequently requires addition of coolant is an indication of leaks or engine problems.

Replacing the Engine Coolant

⚠ WARNING

In order to avoid potential burns, do not remove the pressure cap or loosen the coolant drain plug if the engine is hot.

1. Remove the cooling system pressure cap.
2. Unscrew coolant drain plug partially to drain the coolant into a suitable container.

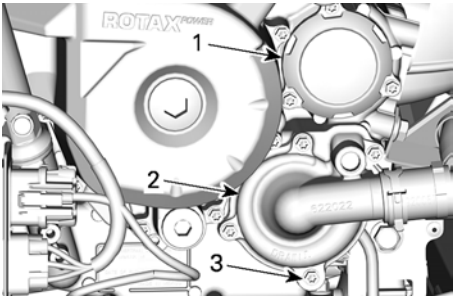

V-TWIN ENGINE

1. Oil filter cover
2. Water pump cover
3. Coolant drain plug

3. Disconnect the lower radiator hose from the water pump cover and drain the remaining coolant into a suitable container.
4. Tighten the coolant drain plug to specification.

Tightening Torque	
Coolant drain plug	10 ± 1 Nm (89 ± 9 lbf-in)

5. Reinstall radiator hose.
6. Fill cooling system with coolant, refer to *Bleeding the Cooling System* procedure.

Bleeding the Cooling System

1. Remove the pressure cap.
2. Fill coolant system until it is full up to the Max line on the coolant tank.

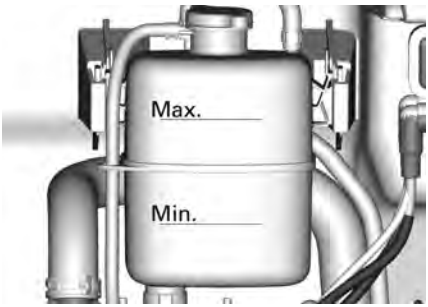

3. Install pressure cap.
4. Run engine at idle with the pressure cap **ON** until the cooling fan cycles on for a second time.
5. Stop the engine and let it cool down.

⚠ WARNING

In order to avoid potential burns, do not remove the pressure cap if the engine is hot.

6. When the engine is cool, remove pressure cap and add coolant if required.
7. Install pressure cap.
8. After the next ride, following this procedure, check coolant level. Add coolant as required. Refer to *Verifying the Engine Coolant Level* in this section.

EXHAUST SYSTEM

Cleaning the Area Surrounding the Exhaust System

⚠ WARNING

Debris accumulation could lead to a vehicle fire when the exhaust system is hot and the debris are dried.
In some cases, that could result in serious properly damages, injuries or even death.
Clean often and regularly the area surrounding the exhaust system when riding in swamp, bog, hay or dead leaves.
In other situations, clean as per maintenance schedule requirement.
Also, check all exhaust heat shields for damage regularly and replaced when needed.

⚠ CAUTION

Never perform this operation immediately after the engine has been running because exhaust system is very hot.

1. From the rear of the vehicle, clean the areas around the muffler.
2. Clean the areas around the exhaust pipe and the exhaust manifold.

⚠ WARNING

Clean also under the heat shields.

Inspecting and Cleaning the Muffler Spark Arrester

⚠ CAUTION

Never perform this operation immediately after the engine has been running as exhaust system is very hot.

1. Remove and discard the tail pipe retaining screws.

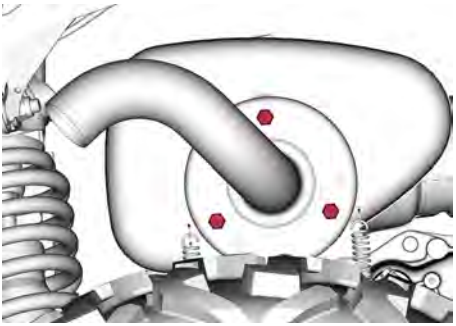

V-TWIN ENGINE CONFIGURATION

2. Remove exhaust tail pipe, gasket (discard) and spark arrester.

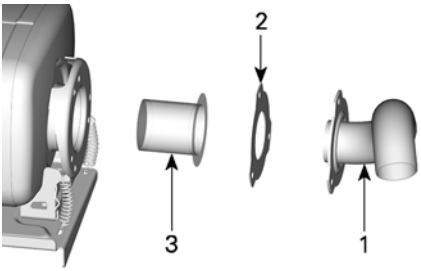

TYPICAL

1. *Tail pipe*
2. *Gasket (discard)*
3. *Spark arrester*

3. Remove carbon deposits from the spark arrester using a brush.

NOTICE

Use a metallic soft brush and be careful to avoid damaging spark arrester mesh.

4. Inspect mesh of spark arrester for any damage. Replace as required.
5. Inspect spark arrester chamber in muffler. Remove any debris as required.
6. Reinstall the muffler spark arrester in the reverse of the removal procedure. However pay attention to the following.

Tighten to specification.

Tightening Torque	
Tail pipe retaining screw	32 ± 2 Nm (24 ± 1 lbf-ft)

GEARBOX

Recommended Gearbox Oil

The XPS oil is specially formulated to meet the lubrication requirements of this gearbox. BRP strongly recommends the use of its XPS oil.

NOTICE

Do not use another type of oil when servicing.

XPS Recommended Gearbox Oil
75W140 Synthetic gear oil
Alternative, or if not available
75W 140 API GL-5 Synthetic gear oil

Verifying the Gearbox Oil Level (V-Twin)

1. Place the vehicle on a level surface.
2. Select PARK position.
3. Clean dipstick area.
4. Remove the gearbox oil dipstick.

5. Wipe and reinstall the dipstick.

6. Remove dipstick again and check oil level. It should be near or equal to the upper mark.

1. *MIN.*
2. *MAX.*
3. *Operating range*

7. Add oil (if required):
   1. Place a funnel into the dipstick hole.
   2. Add a small amount of recommended oil.
   3. Recheck oil level often.
   4. Repeat the above procedures until oil level reaches the dipstick's upper mark.

NOTICE

Operating the gearbox with an improper oil level may severely damage gearbox.

NOTE:
Do not overfill. Wipe off any spillage.

8. Properly tighten oil dipstick.

Changing the Gearbox Oil

1. Place the vehicle on a level surface.
2. Clean the following areas.
   – Drain plug area.

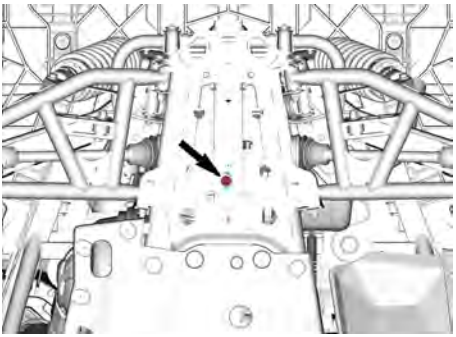

   – Dipstick area.

3. Place a drain pan underneath the oil drain plug area.
4. Remove the dipstick.
5. Remove the drain plug.
6. Let oil completely drain from gearbox.
7. Clean drain plug from any metallic particles.
8. Install the drain plug.

Tightening Torque	
Drain plug	20 ± 2 Nm (15 ± 1 lbf-ft)

9. Refill gearbox.

NOTE:
The oil should be level with the bottom of the oil level orifice.

NOTICE

Use ONLY the recommended type of oil.

10. Reinstall dipstick.
11. Lubricate the VSS O-ring.

Super Lube Grease

12. Wipe off any spillage.

FRONT DIFFERENTIAL

Recommended Front Differential Oil

The XPS oil is specially formulated to meet the lubrication requirements of this differential. BRP strongly recommends the use of its XPS oil.

NOTICE
Do not use another type of oil when servicing.

XPS Recommended Front Differential Oil
75W90 Synthetic gear oil
Alternative if XPS Product is not Available
75W90 (API GL-5) synthetic gear oil

Verifying the Front Differential Oil Level

1. Place the vehicle on a level surface.
2. Clean filler plug area prior to checking oil level.

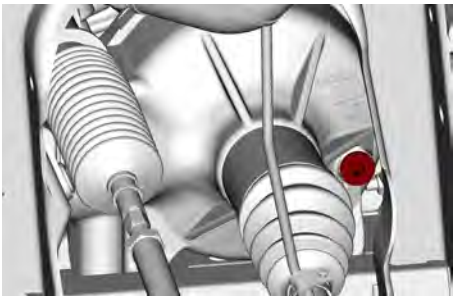

3. Remove the filler plug.
4. Check oil level. The oil should reach the lower edge.
5. Reinstall the filler plug.

Tightening Torque	
Filler plug	16.5 ± 2.5 Nm (146 ± 22 lbf-in)

Changing the Front Differential Oil

1. Place vehicle on a level surface.
2. Set gearbox in park position.
3. From underneath the vehicle, clean the drain plug area.

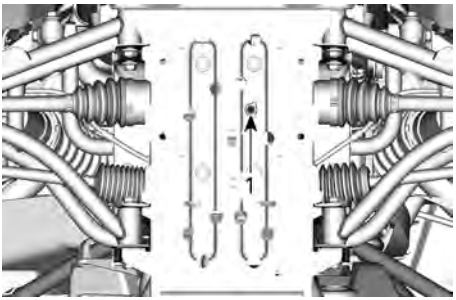

1. Drain plug

4. Place a drain pan under the rear differential.
5. Remove drain plug.
6. Unscrew filler plug.

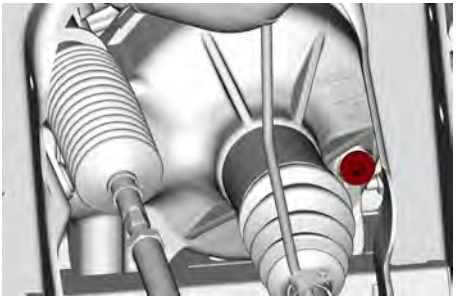

FRONT DIFFERENTIAL (NO ACTUATOR)

7. Let oil drip completely.
8. Install drain plug.

Tightening Torque	
Drain plug	2.5 ± 0.5 Nm (24 ± 4 lbf-in)

9. Refill differential with recommended oil for optimal performance.
10. For the differential oil capacity, refer to *Technical Specifications*.
11. Reinstall filler plug.

Tightening Torque	
Filler plug	16.5 ± 2.5 Nm (146 ± 22 lbf-in)

SPARK PLUGS

Accessing the Spark Plug(s)

The front spark plug can be reached by removing the engine service cover. Refer to *Accessing the Maintenance Components* for the procedure.

The rear spark plug can be reached through the right rear wheel arch.

Removing the Spark Plug

1. Unplug spark plug cable.
2. Clean spark plug area with pressurized air before removing spark plug.
3. Unscrew spark plug completely using a spark plug socket, then remove it.

Installing the Spark Plugs

1. Prior to installation make sure that the contact surface of cylinder head and spark plug is free of grime.
2. Using a feeler gauge, set the spark plug gap.

Spark Plug Gap
0.8 to 0.9 mm (.031 to .035 in)

3. Coat spark plug threads with the following anti-seize lubricant.

Service Product
Copper-based anti-seize lubricant

4. Screw spark plug into cylinder heads by hand and tighten with a torque wrench and a proper socket.

NOTICE

Do not overtighten spark plugs, engine damage can occur.

Tightening Torque	
Spark plug	11 Nm (97 lbf-in)

CVT COVER

For a better understanding, some illustrations are taken with engine out of vehicle. To perform the following instructions, it is not necessary to remove engine.

⚠ WARNING

Never touch CVT while engine is running.
Never drive vehicle when CVT cover is removed.

⚠ CAUTION

Engine must be cool before cover is removed.

NOTICE

This CVT is lubrication free. Never lubricate any components except drive pulley bearing.

Accessing the CVT Cover

The CVT cover is accessible by the rear LH wheel well.

Removing the CVT Cover

1. Place the vehicle on a level surface.
2. If equipped, remove the CVT air intake hose.
3. Manually, remove all CVT cover retaining screws.

NOTICE
Do not use an impact tool to remove CVT cover screws.

NOTE:
Remove the center top screw last to support the cover during removal.

4. Remove the CVT cover and its gasket.

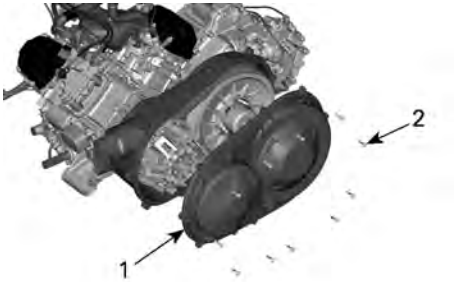

1. *CVT cover*
2. *CVT cover screws*

Installing the CVT Cover

1. Install the center top screw of first.
2. Tighten the CVT cover screws as per following sequence.

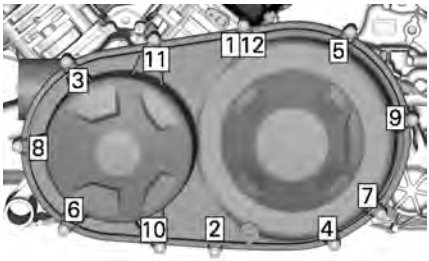

Tightening Torque	
CVT cover screws	7 ± 0.8 Nm (62 ± 7 lbf-in)

3. If equipped, install CVT air intake hose.

Tightening Torque	
Clamp worm gear	2 ± 0.3 Nm (18 ± 2 lbf-in)

Drive Belt

Removing the Drive Belt (Twin Cylinder Engine)

NOTICE
In case of a drive belt failure, the CVT, cover and air outlet must be cleaned.

Please refer to *Tips for Maximizing Drive Belt Durability* in *Basic Procedures* for some important information.

1. Remove the *CVT Cover*.
2. Install the adaptor in the threaded hole of the driven pulley.

Driven pulley adapter **(P/N 708200720)**	

3. Screw the puller/locking tool in the threaded hole of the adaptor.

Puller/locking tool **(P/N 529000088)**	

4. Tighten to open the pulley.

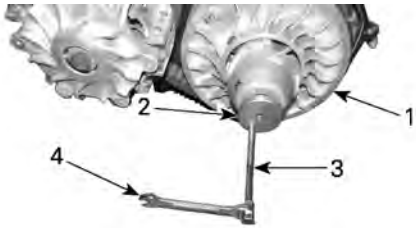

1. *Fixed sheave of driven pulley*
2. *Adaptor*
3. *Puller/locking tool*
4. *Wrench*

5. To remove belt, slip the belt over the top edge of fixed sheave, as shown.

Installing the Drive Belt

NOTICE

The maximum drive belt life span is obtained when the drive belt has the proper rotation direction.

1. To install the drive belt, slip the drive belt over the top edge of fixed sheave.
2. Install it so that the arrow printed on belt is pointing towards front of the vehicle, viewed from top.

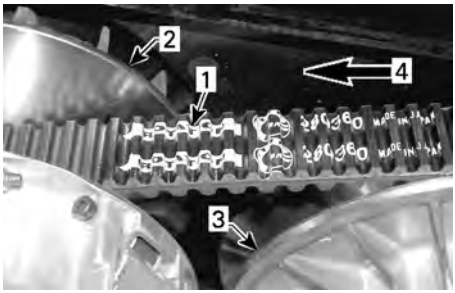

1. *Arrow printed on belt*
2. *Drive pulley (front)*
3. *Driven pulley (rear)*
4. *Rotation direction*

3. Unscrew and remove the puller/locking tool.

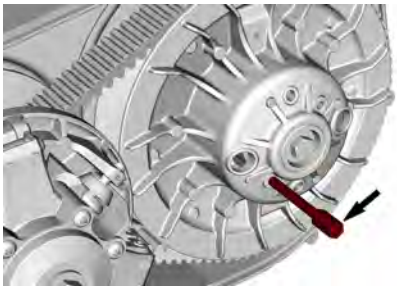

4. Turn the driven pulley until the lowest portion of the cogs on the external surface of the drive belt is even with the driven pulley edge.

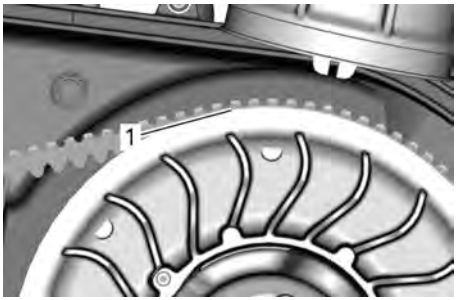

1. *Lowest portion of cogs even with driven pulley edge*

5. Install the CVT cover.

Drive and Driven Pulleys

Inspecting Drive and Driven Pulleys

This inspection must be performed by an authorized Can-Am Off-road dealer, repair shop, or person of your own choosing for maintenance, repair, or replacement.

Drive Pulley

Inspect the bushings and rollers of the sliding sheave of the drive pulley, replace worn parts.

Driven Pulley

Inspect rollers on fixed sheave.

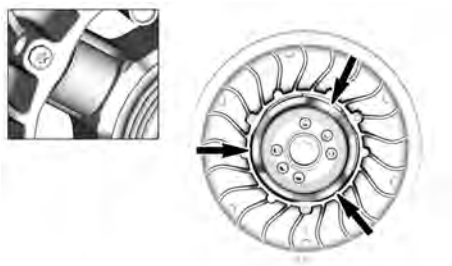

BATTERY

Battery Maintenance

NOTICE

Never charge a battery while installed in vehicle.

These vehicles are equipped with a VRLA battery (Valve Regulated Lead Acid). It is a maintenance-free type battery, there is no need to add water to adjust electrolyte level.

NOTICE

Never remove the battery sealing cap.

Removing the Battery

1. Remove the driver's seat cushion.
2. Disconnect BLACK (-) cable first then RED (+) cable.

NOTICE

Always respect this order for disassembly; disconnect BLACK (-) cable first.

3. Remove battery holder retaining screw(s).

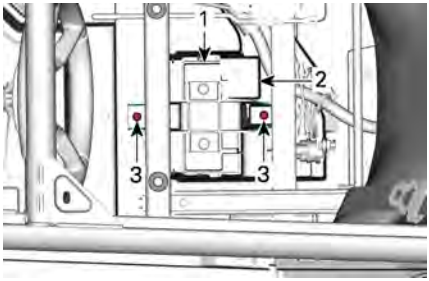

1. Battery holder
2. Battery
3. Battery holder retaining screw(s)

4. Remove battery holder.
5. Remove battery.

Installing the Battery

Battery installation is the reverse of the removal procedure.

NOTICE

Improper orientation of the battery cables (reverse polarity) will result in damage to the voltage regulator.

NOTICE

Always connect RED (+) cable first then BLACK (-) cable.

Fuses and Fusible Links

Replacing a Fuse

If a fuse is burnt, replace it by one of the same rating.

NOTICE

Do not use a higher rated fuse as this can cause severe damage.

Fuse Boxes Location

The vehicle is equipped with two fuse boxes.

The front fuse box is located under the LH dashboard.

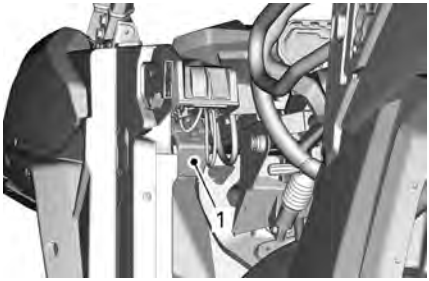

1. Front fuse box

The rear fuse box is located behind the rear left passenger's seat backrest, underneath the acoustic panel.

Fuse Links and Individual Fuse

The vehicle is equipped with 2 fuse links and an individual fuse.

The fuse link 1 is connected to battery positive post.

The fuse link 2 is located between the fuse box #1 and the accessory post (located under the dash).

The regulator fuse holder is also located near the battery.

Fuse Boxes Description

Individual Fuse Holders		
No	**Description**	**Rating**
PF3	DPS (Under the dash, near DPS)	40 A
PF4	Accessory post (Under dash terminal block)	30 A
PF8	Smart Lok (Under dash, near front diff module) (if equipped)	20 A
PF10	Regulator (Near the battery)	50 A

Fuse Box #1 (Under the Dash) (Fuses are identified on the fuse box cover)		
No	**Description**	**Rating**
F11	Headlamps	20 A
F12	DC3 Winch	10 A
F14	12 V accessory outlet 1	10 A
F16	Tail lamps	10 A
R9	Fuses PF1/F14 (DC outlet) PF4 Accessory post	N/A
R3	ECM accessory 12V	N/A
R8	Brake lights	N/A
Spare1	Spare	20 A

Fuse Box #2 (Behind driver's Seat) (Fuses are identified on the fuse box cover)		
No	**Description**	**Rating**
F4	Cluster/relays	10 A
F5	Ignition/injection/fuel pump	10 A
F6	Engine Control Module (ECM)	10 A
F7	4WD actuator	10 A
F8	Ignition switch Clock	10 A
F9	Cooling fan	25 A
F18	Oxygen sensor Evap purge valve	10 A
R1	Fan	N/A
R2	Main	N/A

Fuse Links		
Fuse Link	**Description**	**Rating**
1	Main	18 awg
2	Accessory post	14 awg

Lights

Replacing a Headlight Bulb

⚠ WARNING

Improper bulb installation, may cause its dislodgement from the headlight housing.
In this situation, the bulb could enter into contact with the headlight housing, lens or any other parts located in this area, resulting in parts melting and/or fire hazard.

NOTICE

Never touch glass portion of a halogen bulb with bare fingers, it shortens its operating life. If glass is touched, clean it with isopropyl alcohol which will not leave a film on the bulb.

Unplug connector from bulb.

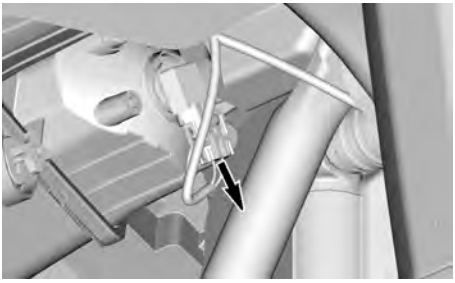

TYPICAL

Rotate bulb.

TYPICAL

Pull out bulb.

Properly reinstall removed parts in the reverse order of their removal.

Validate headlights operation.

Headlight Beam Aiming

Turn adjustment screw to adjust beam height to your convenience.

NOTE:
Adjust headlights evenly.

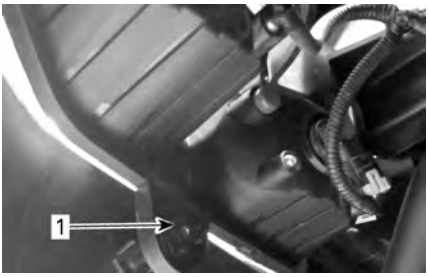

1. Adjustment screw

Taillight

The taillights are built with LEDs (light emitting diode) and this technology proved to be reliable. In the unlikely

event they do not work, have them checked by an authorized Can-Am dealer, a repair shop or person of your choosing.

Drive Shaft Bellow and Protector

Inspecting Drive Shaft Bellows and Protector

1. Visually inspect drive shaft protectors and bellows condition.
2. Check protectors for damage or rubbing against shafts.
3. Check bellows for cracks, tears, leaking grease, etc.
4. Repair or replace damaged parts as necessary.

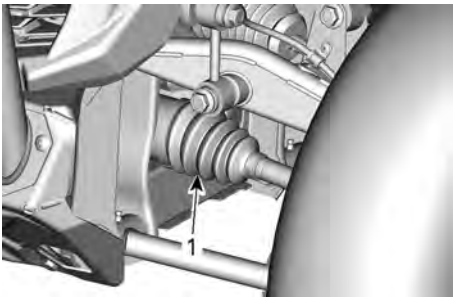

TYPICAL — FRONT DIFFERENTIAL SIDE

1. Inner drive shaft bellows

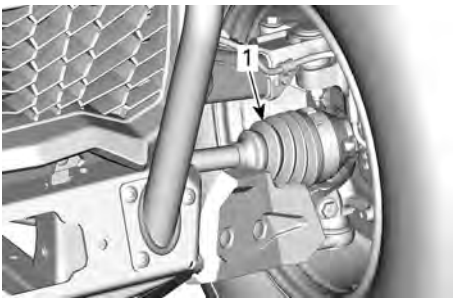

TYPICAL — FRONT WHEEL SIDE

1. Outer drive shaft bellows

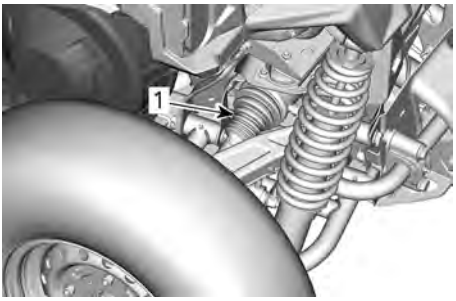

TYPICAL — REAR GEARBOX SIDE

1. Inner drive shaft bellows

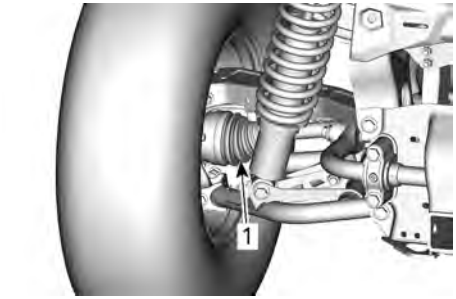

TYPICAL — REAR WHEEL SIDE

1. Outer drive shaft bellows

Wheel Bearing

Inspecting a Wheel Bearing

1. Lift and support vehicle. Refer to *Lifting and Supporting the Vehicle*.
2. Push and pull the wheels from the upper edge to feel the play.
3. See an authorized Can-Am Off--road dealer, a repair shop or a person of your choosing if there is excessive play.

TYPICAL

Wheels and Tires

Removing a Wheel

1. Place the vehicle on a level surface.
2. Place shift lever on PARK position.
3. Loosen the wheel lug nuts.
4. Lift and support vehicle. Refer to *Lifting and Supporting Vehicle* section
5. Remove lug nuts and wheel.

Installing a Wheel

1. Inspect studs threads and lug nuts. Replace if needed.
2. Install the wheel.

NOTE: The tires are unidirectional and their rotation must be kept in a specific direction for proper operation.

3. Install all lug nuts by hand.

NOTICE

Always use the recommended wheel lug nuts for the type of wheel. Using a different lug nut could cause damages to the rim or studs.

4. Tighten wheel lug nuts in accordance with the following illustration.

Tightening Torque	
Wheel lug nuts	100 ± 10 Nm (74 ± 7 lbf-ft)

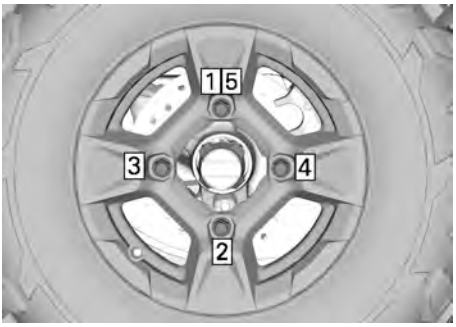

TIGHTENING SEQUENCE

Tire Pressure

⚠ WARNING

Tire pressure greatly affects vehicle handling and stability. Insufficient pressure may cause tire to deflate and rotate on wheel. Overpressure may burst the tire. Always follow recommended pressure.
NEVER set tire pressure below minimum. It could cause the tire to dislodge from the rim.

Check pressure when tires are **cold** before using the vehicle. Tire pressure changes with temperature and altitude. Recheck pressure if one of these conditions has changed.

Refer to the *Tires Pressure and Maximum Load Label* on your vehicle for applicable pressure.

NOTE:
Although the tires are specifically designed for off-road use, a flat may still occur. Therefore, it is recommended to carry a tire gauge, tire pump and a repair kit.

Tire Inspection

Check tire for damage and wear. Replace if necessary.

⚠ WARNING

Do not rotate tires. The front and rear tires have a different size. The left and right tires have different unidirectional tread patterns.

Tire Replacement

Tire replacement should be performed by an authorized Can-Am Off-road dealer, a repair shop or a person of your choosing.

⚠ WARNING

Replace tires only with the same type and size as original tires. For unidirectional tread pattern, ensure that the tires are installed in the correct direction of rotation. Tires should be replaced, by an experienced person, in accordance with tire industry standards and tools.

SUSPENSION

See an authorized Can-Am Off-road dealer, a repair shop or a person of your choosing if any problem is detected.

Inspecting the Suspension

See an authorized Can-Am Off-road dealer, a repair shop or a person of your choosing if any problem is detected.

Shock Absorbers

1. Inspect shock absorber for leaks, bump stop wear out or other damages.
2. Verify if fasteners are still well tightened.

Tightening Torque	
M12 bolt	74.5 ± 4.5 Nm (55 ± 3 lbf-ft)

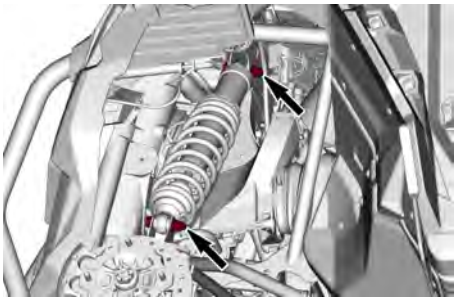

TYPICAL — FRONT SHOCK ABSORBER FASTENERS

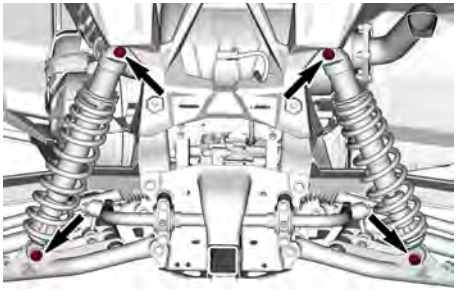

TYPICAL — REAR SHOCK ABSORBER FASTENERS

Front Suspension Arms

1. Check suspension arms for cracks, bending or other damages.
2. Re-tighten the suspension arm bolts to specifications at ride height.

NOTICE

To avoid suspension bushings damages, never lift the vehicle from the ground to re-tighten suspension arm fasteners.
When possible, always apply the tightening torque by the bolt head and not by using the nut to ensure optimal clamping.

Tightening Torque	
M12 bolt	112.5 ± 7.5 Nm (83 ± 6 lbf-ft)

Rear Suspension Arms

1. Check suspension arms for distortion, cracks or bending.
2. Re-tighten suspension arm to specifications at ride height.

NOTICE

To avoid suspension bushings damages, never lift the vehicle from the ground to re-tighten suspension arm fasteners.

NOTICE

The suspension arms must be tightened on the M12 bolt head and not on the nut (when possible) to insure optimal clamping.

Tightening Torque	
M12 bolt	130 ± 10 Nm (96 ± 7 lbf-ft)
Hexagonal flanged elastic nut M10	90 ± 10 Nm (66 ± 7 lbf-ft)

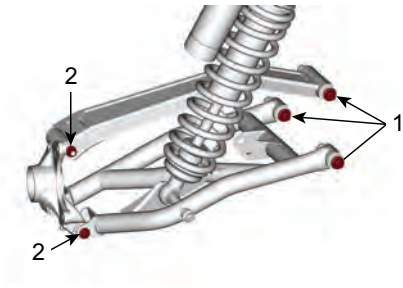

1. *M12 fasteners*
2. *M10 fasteners*

Stabilizer Bar

1. Check stabilizer bars for cracks, bending or, other damaged.
2. Tighten bracket screws to specification.

Tightening Torque	
Stabilizer bar bracket screws	95 ± 5 Nm (70.1 ± 3.7 lbf-ft)

Lubricating the Suspension

Stabilizer Bar

1. Lubricate stabilizer bars using the following product.

XPS synthetic suspension grease

Stabilizer Bars Grease Fittings Location

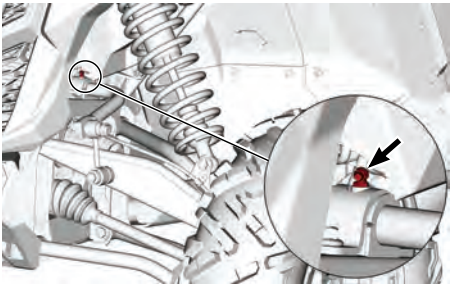

TYPICAL — FRONT STABILIZER BAR

NOTE: There is one grease fitting on the top of each stabilizer bar pivot bushing.

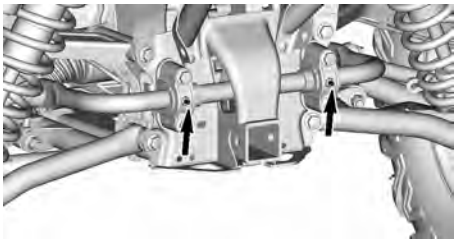

TYPICAL — REAR STABILIZER BAR

BRAKES

Verifying Brake Fluid Level

The brake fluid reservoirs are located under the front service cover. Refer to *Accessing Maintenance Components* section.

1. Place the vehicle on a level surface.
2. Check brake fluid in each reservoir for proper level. The level should be between MIN and MAX marks.

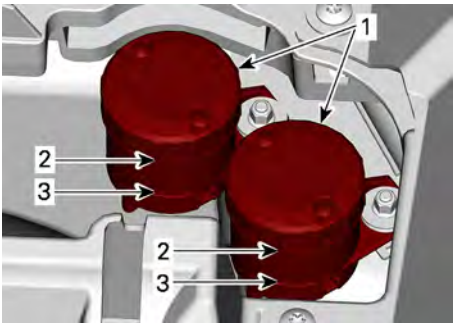

1. *Brake fluid reservoirs*
2. *MAX*
3. *MIN*

⚠ WARNING

A low level may indicate leaks or worn brake pads.

Adding Brake Fluid

1. Clean both reservoir covers and the surrounding area.
2. Add enough new brake fluid to increase the level near the MAX mark.

NOTICE

Do not overfill.

⚠ WARNING

Ensure diaphragm is pushed back inside the cover before installing it.

Recommended Brake Fluid

Always use brake fluid meeting the specification DOT 4 only.

NOTICE

To avoid serious damage to the braking system, do not use fluids other than the recommended one, nor mix different fluids for topping up.
Do not use brake fluid taken from old or already opened containers.

Inspecting Brake System

The brake inspection, maintenance and repair should be performed by an authorized Can-Am dealer, a repair shop or person of your choosing.

However, verify the following between visits to your dealer:

- Brake fluid level
- Brake system for fluid leaks
- Brake pad wear
- Brake cleanliness

⚠ WARNING

The brake fluid replacement or brake system maintenance and repairs should be performed by an authorized Can-Am dealer.

SEAT BELTS

Cleaning Seat Belt

To clean dirt and debris from the seat belts, sponge the straps with mild soap and water.

⚠ WARNING

To avoid damaging the seat belt components, never use a pressure washer to clean them.

NOTICE

Do not use bleach, dye, or household detergents.

Doors

Lubricating Door Latch Mechanism

1. Lubricate door latch mechanisms (lock and hinges) periodically using a silicone based lubricant.

NOTICE

Never apply any type of grease on door lock mechanism.

CAGE

Verifying Cage Fasteners

Tighten cage fasteners to specification periodically.

NOTE: LH side shown, repeat on RH side.

1. Remove the lower trims from the front pillars.

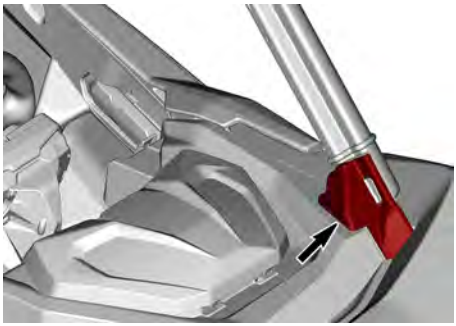

2. Remove seat backrests, refer to *Accessing Maintenance Components* section.
3. Tighten all fasteners.

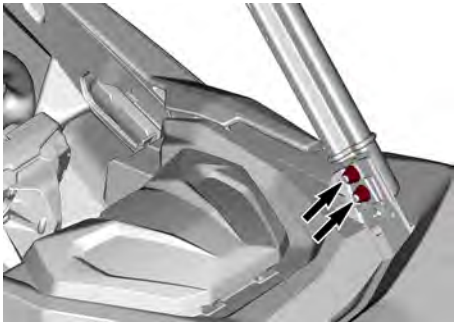

Tightening Torque	
Cage fasteners	67.5 ± 2.5 Nm (50 ± 2 lbf-ft)

Vehicle Cleaning and Protection

NOTICE

Never use a high pressure washer to clean the vehicle. USE LOW PRESSURE ONLY (like a garden hose).
High pressure can cause damage to electrical or mechanical components.

Pay attention to certain areas where salt-water, mud or debris can accumulate and potentially cause:

- Fire
- Wear
- Interference
- Corrosion.

This list includes but is not limited to:

- Around exhaust system and between muffler and muffler cover
- Under and around the fuel tank
- Radiator
- Shock absorbers
- Around front and rear differentials
- Around and underneath engine and gearbox
- Inside wheels
- On top of skid plates.

⚠ WARNING

Debris accumulation could lead to a vehicle fire when the exhaust system is hot and the debris are dried.
In some cases, that could result in serious properly damages, injuries or even death.
Clean often and regularly the area surrounding the exhaust system when riding in swamp, bog, hay or dead leaves.
In other situations, clean as per maintenance schedule requirement.

When vehicle is used in salt-water environment rinsing the vehicle with fresh water is necessary to preserve vehicle and its components after each operating day.

Metallic parts lubrication is highly recommended.

Use anti-corrosive lubricant or an equivalent.

XPS Lubricant and anti-corrosive

Painted parts which are damaged should be properly repainted to prevent rust.

When required, wash the body with warm water and soap (only use mild detergent). Apply non-abrasive wax.

NOTICE

Never clean plastic parts with strong detergent, degreasing agent, paint thinner, acetone, etc.

Protect the vehicle with a cover to prevent dust accumulation during storage.

NOTICE

The vehicle has to be stored in a cool and dry place and covered with an opaque tarpaulin. This will prevent sun rays and grime from affecting plastic components and vehicle finish.

STORAGE AND PRESEASON PREPARATION

When a vehicle is not in use for more than 4 months, proper storage is a necessity.

If the vehicle is to be remain inactive for more than 21 days, disconnect the BLACK (-) cable of the battery.

The use of a low amperage trickle charger is recommended to keep battery fully charged.

Before using your vehicle after storage, a preparation is required.

See an authorized Can-Am Off-road dealer, a repair shop, or a person of your own choosing to have your vehicle prepared properly.

TECHNICAL INFORMATION

VEHICLE IDENTIFICATION

The main components of your vehicle (engine and frame) are identified by different serial numbers. It may sometimes become necessary to locate these numbers for warranty purposes or to trace your vehicle in the event of loss. These numbers are required by the authorized Can-Am Off-road dealer to complete warranty claims properly. We strongly recommend that you take note of all the serial numbers on your vehicle and supply them to your insurance company.

Vehicle Identification Number

VIN LABEL - EUROPEAN COUNTRIES

VIN LABEL - OTHER COUNTRIES

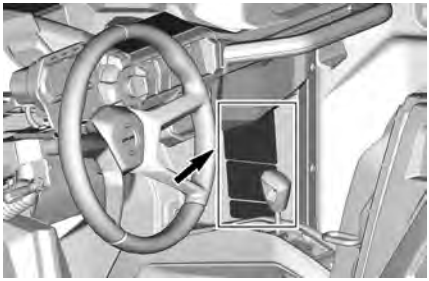

TYPICAL - VIN LABEL LOCATION

Engine Identification Number (EIN)

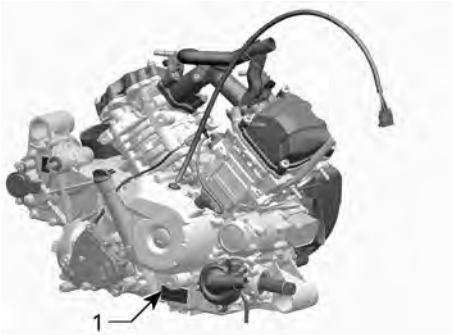

TYPICAL

1. *EIN (Engine Identification Number)*

Compliance Label

ROHVA Compliance Label

Regulation (EU) 2016/1628 Applicable for Non-Road Mobile Machineries

Vehicles who comply to Regulation (EU) 2016/1628 (NRMM) are identified on the engine valve cover as well as on the vehicle, near the VIN label.

TYPICAL

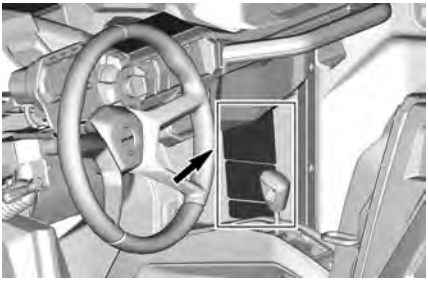

TYPICAL

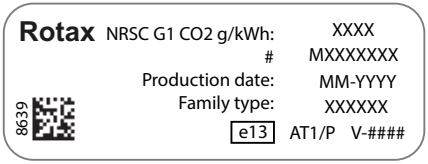

TYPICAL - NRMM IDENTIFICATION LABEL

NOTE:
Tampering with the engine or its components voids the EU type-approval of that particular engine.

Emission Control Information

CARB Model	Other Model
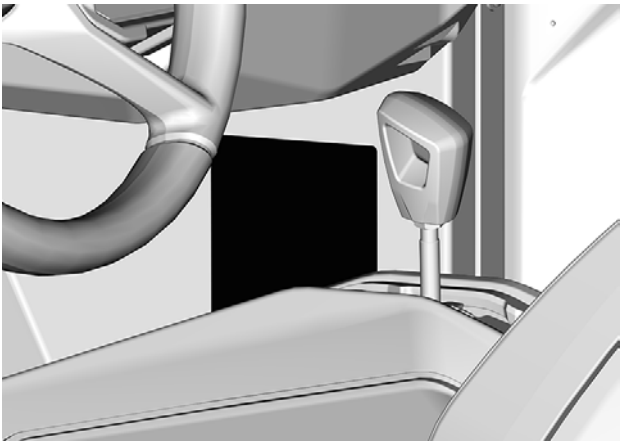	

Ethanol Compliance Pictogram

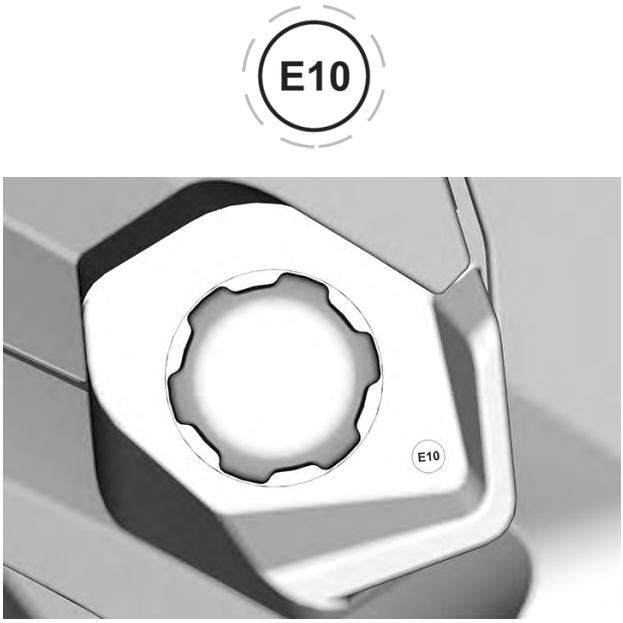

Technical Information Label

Air Box Cover Installation Label

North America

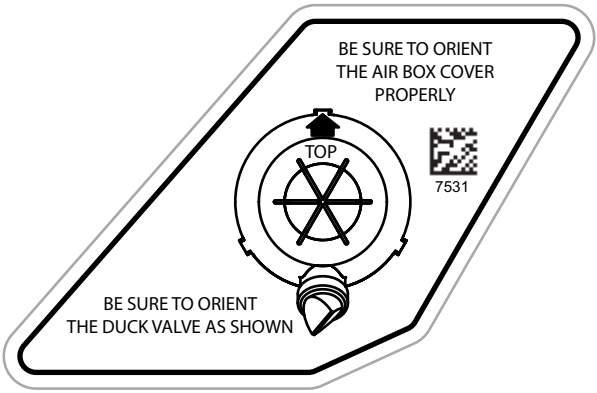

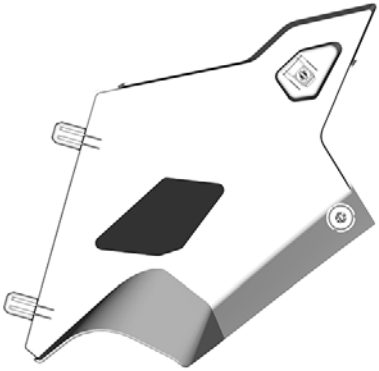

Outside North America
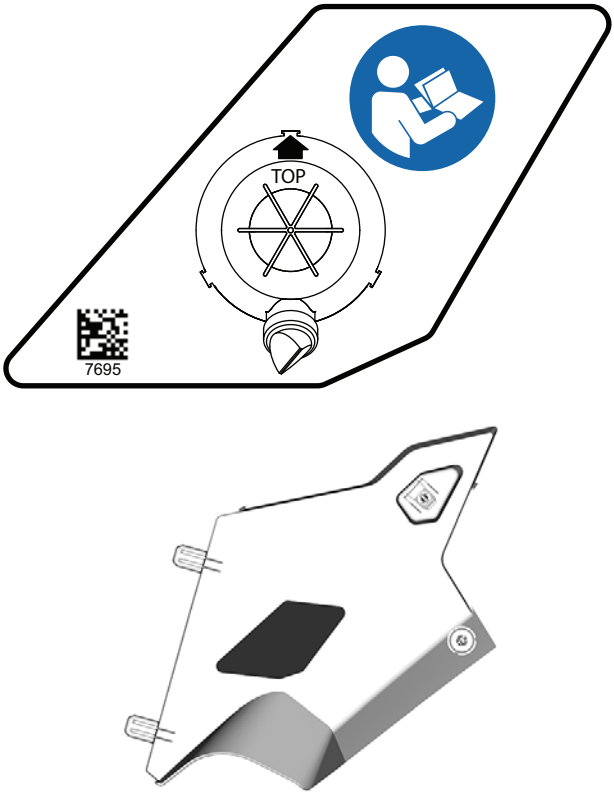

Air Filter Maintenance Label

North American Models

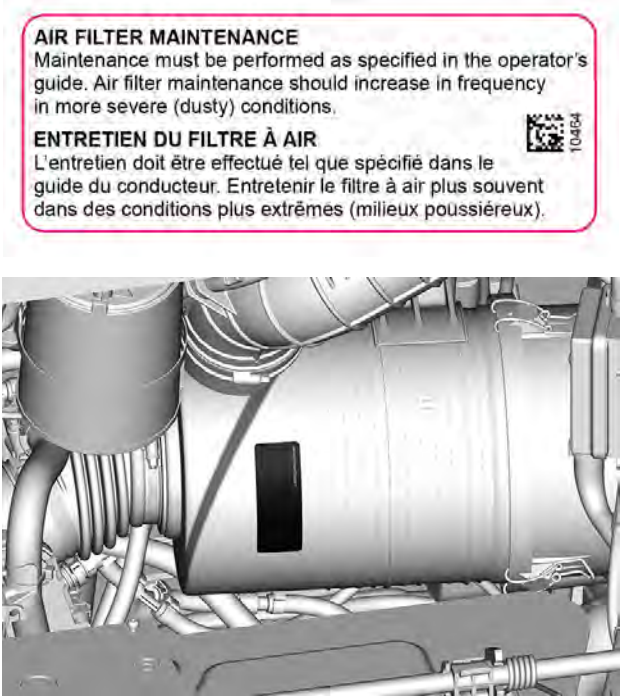

Models Outside North America

NOTICE

To replace the air filter, refer to the operator's guide for the procedure.

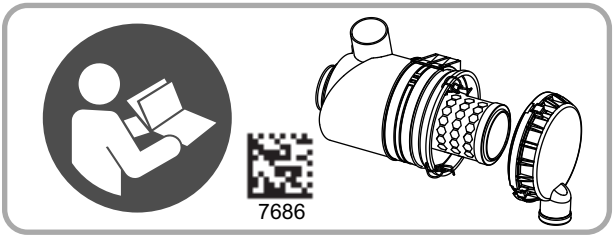

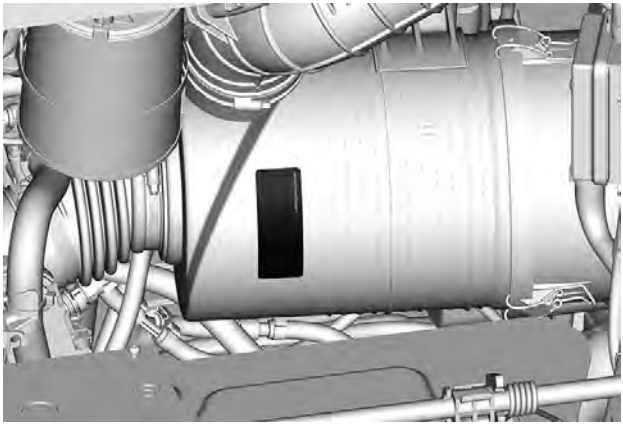

BRP RF DESS POST GEN3 (CAN)

USA and Canada

This device complies with FCC Part 15 and Industry Canada license exempt RSS standard(s). Operation is subject to the following two conditions:

1. this device may not cause interference, and
2. this device must accept any interference, including interference that may cause undesired operation of the device.

This equipment has been tested and found to comply with the limits for a Class B digital device, pursuant to part 15 of the FCC Rules. These limits are designed to provide reasonable protection against harmful interference in a residential installation. This equipment generates, uses and can radiate radio frequency energy and, if not installed and used in accordance with the instructions, may cause harmful interference to radio communications. However, there is no guarantee that interference will not occur in a particular installation. If this equipment does cause harmful interference to radio or television reception, which can be determined by turning the equipment off and on, the user is encouraged to try to correct the interference by one or more of the following measures:

– Reorient or relocate the receiving antenna.
– Increase the separation between the equipment and receiver.
– Connect the equipment into an outlet on a circuit different from that to which the receiver is connected.
– Consult the dealer or an experienced radio/TV technician for help.

The device has been evaluated to meet general RF exposure requirement. The device can be used in portable exposure condition without restriction.

Le dispositif a été évalué à satisfaire l’exigence générale de l’exposition aux rf. L’appareil peut être utilisé dans des conditions d’exposition portatif sans restriction.

L’émetteur/récepteur exempt de licence contenu dans le présent appareil est conforme aux CNR d’Innovation, Sciences et Développement économique Canada applicables aux appareils radio exempts de licence.

1. l'appareil ne doit pas produire de brouillage, et
2. l'appareil doit accepter tout brouillage radioélectrique subi, même si le brouillage est susceptible d'en compromettre le fonctionnement.

Changes or modifications not expressly approved by the party responsible for compliance could void the user's authority to operate the equipment.

IC: 12006A-1001317030 For variant 1001316154 (CAN)

FCC ID: 2ACER 1001317030 For variant 1001316154 (CAN)

Mexico

IFETEL

Marca: BRP Megatech

Número: BRME1023-28186

BRP Megatech Certificate number: 1450978

Modelo: 1001316154

NOM-208-SCFI-2016 (Disposición Técnica IFT-008-2015)

La operación de este equipo está sujeta a las siguientes dos condiciones:

1. Es posible que este equipo o dispositivo no cause interferencia perjudicial y
2. Este equipo o dispositivo debe aceptar cualquier interferencia, incluyendo la que pueda causar su operación no deseada.

Brazil

Número: 05254-23-15603

BRP Megatech Certificate number: 1450991

Modelo: 1001316154

Este equipamento não tem direito à proteção contra interferência prejudicial e não pode causar interferência em sistemas devidamente autorizados. Para maiores informações, consulte o site da ANATEL.

Japan

This device is granted pursuant to the Japanese Radio Law (電波法) and the Japanese Telecommunications Business Law (電気通信事業法). This device should not be modified (otherwise the granted designation number will become invalid).

Europe

Declaration of Conformity

Simplified EU Declaration of Conformity according Radio Equipment Directive 2014/ 53/EU

CE

DE

Hiermit erklärt BRP Megatech, dass der Funkanlagentyp 1001316154 der Richtlinie 2014/53/EU entspricht. Der vollständige Text der EU-Konformitätserklärung ist unter der folgenden Internetadresse verfügbar: https://www. brp. com/en/corporatesocialresponsibility/productsafety.html

FR

Le soussigné, BRP Megatech, déclare que l'équipement radioélectrique du type 1001316154 est conforme à la directive 2014/53/UE. Le texte complet de la déclaration UE de conformité est disponible à l'adresse internet suivante: https://www.brp.com/en/corporatesocialresponsibility/productsafety.html

BG

С настоящото BRP Megatech декларира, че този тип радиосъоръжение 1001316154 е в съответствие с Директива 2014/53/ЕС.

Цялостният текст на ЕС декларацията за съответствие може да се намери на следния интернет адрес: https://www. brp. com/en/corporatesocialresponsibility/productsafety.html

EL

Με την παρούσα ο/η BRP Megatech, δηλώνει ότι ο ραδιοεξοπλισμός 1001316154 πληροί την οδηγία 2014/53/ΕΕ. Το πλήρες κείμενο της δήλωσης συμμόρφωσης ΕΕ διατίθεται στην ακόλουθη ιστοσελίδα στο διαδίκτυο: https://www.brp.com/en/corporatesocialresponsibility/productsafety.html

CS

Tímto BRP Megatech prohlašuje, že typ rádiového zařízení 1001316154 je v souladu se směrnicí 2014/53/EU. Úplné znění EU prohlášení o shodě je k dispozici na této internetové adrese: https://www.brp.com/en/corporatesocialresponsibility/productsafety.html

DA

Hermed erklærer BRP Megatech, at radioudstyrstypen 1001316154 er i overensstemmelse med direktiv 2014/53/EU.

EU-overensstemmelseserklæringens fulde tekst kan findes på følgende internetadresse: https://www. brp. com/en/corporatesocialresponsibility/productsafety. html

ET

Käesolevaga deklareerib BRP Megatech, et käesolev raadioseadme tüüp 1001316154 vastab direktiivi 2014/53/EL nõuetele.

ELi vastavusdeklaratsiooni täielik tekst on kättesaadav järgmisel internetiaadressil: https://www.brp.com/en/corporatesocialresponsibility/productsafety.html

ES

Por la presente, BRP Megatech declara que el tipo de equipo radioeléctrico 1001316154 es conforme con la Directiva 2014/53/UE.

El texto completo de la declaración UE de conformidad está disponible en la dirección Internet siguiente: https://www.brp.com/en/corporatesocialresponsibility/productsafety.html

FI

BRP Megatech vakuuttaa, että radiolaitetyyppi 1001316154 on direktiivin 2014/53/EU mukainen. EU-vaatimustenmukaisuusvakuutuksen täysimittainen teksti on saatavilla seuraavassa internetosoitteessa: https://www.brp.com/en/corporatesocialresponsibility/productsafety.html

EN

Hereby, BRP Megatech declares that the radio equipment type 1001316154 is in compliance with Directive 2014/53/EU. The full text of the EU declaration of conformity is available at the following internet address: https://www.brp.com/en/corporatesocialresponsibility/product-safety.html

HR

BRP Megatech ovime izjavljuje da je radijska oprema tipa 1001316154 u skladu s Direktivom 2014/53/EU. Cjeloviti tekst EU izjave o sukladnosti dostupan je na sljedećoj internetskoj adresi: https://www. brp. com/en/corporate-social-responsibility/productsafety.html

HU

BRP Megatech igazolja, hogy a 1001316154 típusú rádióberendezés megfelel a 2014/53/EU irányelvnek. Az EU-megfelelőségi nyilatkozat teljes szövege elérhető a következő internetes címen:https://www.brp.com/en/corporate-socialresponsibility/productsafety.html

IT

Il fabbricante, BRP Megatech, dichiara che il tipo di apparecchiatura radio 1001316154 è conforme alla direttiva 2014/53/UE.

Il testo completo della dichiarazione di conformità UE è disponibile al seguente indirizzo Internet: https://www. brp. com/en/corporate-socialresponsibility/product-safety.html

LT

Aš, BRP Megatech, patvirtinu, kad radijo įrenginių tipas 1001316154 atitinka Direktyvą 2014/53/ES. Visas ES atitikties deklaracijos tekstas prieinamas šiuo interneto adresu: https://www. brp. com/en/corporate-social-responsibility/productsafety.html

LV

Ar šo BRP Megatech deklarē, ka radioiekārta 1001316154 atbilst Direktīvai 2014/53/ES. Pilns ES atbilstības deklarācijas teksts ir pieejams šādā interneta vietnē:https://www.brp.com/en/corporate-social-responsibility/productsafety.html

MT

B'dan, BRP Megatech, niddikjara li dan it-tip ta' tagħmir tar-radju 1001316154 huwa konformi mad-Direttiva 2014/53/UE. It-test kollu tad-dikjarazzjoni ta' konformità tal-UE huwa disponibbli f'dan l-indirizz tal-Internet li ġej: https://www.brp.com/en/corporatesocialresponsibility/productsafety.html

NL

Hierbij verklaar ik, BRP Megatech, dat het type radioapparatuur 1001316154 conform is met Richtlijn 2014/53/EU.

De volledige tekst van de EU-conformiteitsverklaring kan worden geraadpleegd op het volgende internetadres: https://www.brp.com/en/corporatesocialresponsibility/productsafety.html

PL

BRP Megatech niniejszym oświadcza, że typ urządzenia radiowego 1001316154 jest zgodny z dyrektywą 2014/53/UE. Pełny tekst deklaracji zgodności UE jest dostępny pod następującym adresem internetowym: https://www. brp. com/en/corporatesocialresponsibility/productsafety.html

PT

O(a) abaixo assinado(a) BRP Megatech declara que o presente tipo de equipamento de rádio 1001316154 está em conformidade com a Diretiva 2014/53/UE.

O texto integral da declaração de conformidade está disponível no seguinte endereço de Internet: https://www. brp. com/en/corporatesocialresponsibility/productsafety.html

RO

Prin prezenta, BRP Megatech declară că tipul de echipamente radio 1001316154 este în conformitate cu Directiva 2014/53/UE. Textul integral al declaratiei UE de conformitate este disponibil la următoarea adresă internet: https://www.brp.com/en/corporatesocialresponsibility/productsafety.html

SV

Härmed försäkrar BRP Megatech att denna typ av radioutrustning 1001316154 överensstämmer med direktiv 2014/53/EU. Den fullständiga texten till EU-försäkran om överensstämmelse finns på följande webbadress: https://www. brp. com/en/corporatesocialresponsibility/productsafety.html

SL

BRP Megatech potrjuje, da je tip radijske opreme 1001316154 skladen z Direktivo 2014/53/EU. Celotno besedilo izjave EU o skladnosti je na voljo na naslednjem spletnem naslovu: https://www. brp. com/en/corporatesocialresponsibility/productsafety.html

SK

BRP Megatech týmto vyhlasuje, že rádiové zariadenie typu 1001316154 je v súlade so smernicou 2014/53/EÚ. Úplné EÚ vyhlásenie o zhode je k dispozícii na tejto internetovej adrese: https://www. brp. com/en/corporatesocialresponsibility/productsafety.html

IS

BRP Megatech lýsir því hér með yfir að þráðlausi fjarskiptabúnaðurinn 1001316154 er í samræmi við tilskipun 2014/53/ESB. Óstyttan texta ESB-samræmisyfirlýsingarinnar er að finna á veffanginu: https://www.brp.com/en/corporatesocialresponsibility/productsafety.html

Liechtenstein

Hiermit erklärt BRP Megatech, dass der Funkanlagentyp 1001316154 der Richtlinie 2014/53/EU entspricht. Der vollständige Text der EU-Konformitätserklärung ist unter der folgenden Internetadresse verfügbar: https://www. brp. com/en/corporatesocialresponsibility/productsafety.html

NO

Hermed erklærer BRP Megatech at radioutstyrstypen 1001316154 er i samsvar med direktiv 2014/53/EU. Hele teksten i EU-samsvarserklæringen finnes på følgende internettadresse: https://www.brp.com/en/corporatesocialresponsibility/productsafety.html

RU

Компания BRP Megatech настоящим заявляет, что радиотехническое оборудование категории 1001316154 отвечает требованиям Директивы 2014/53/EU.

Полный текст декларации соответствия ЕС доступен на сайте : https://www.brp.com/en/corporatesocialresponsibility/productsafety.html

EVAPORATIVE EMISSION CONTROL SYSTEM

California Models with Evaporative Emission Control System

Beginning with the 2018 model-year vehicles, some California models are certified to meet the CARB (California Air Resources Board) TP-933. These models are equipped with an evaporative emission control system consisting of a low permeation fuel tank (LPFT), low permeation fuel lines (LPFL) and an actively purged carbon canister.

The following statement is required by the CCR (California Code of Regulation): An add-on or modified part must be compliant with applicable ARB evaporative emission control standards. A violation of this requirement is punishable by civil and/or criminal punishment.

NOISE EMISSION CONTROL SYSTEM REGULATION

USA and Canada Only

Tampering with Noise Control System Is Prohibited!

U.S. Federal law and Canadian provincial laws may prohibit the following acts or the causing there of:

1. The removal or rendering inoperative by any person other than for purposes of maintenance, repair or replacement of any device or element of design incorporated into any new vehicle for the purpose of noise control prior to its sale or delivery to the ultimate purchaser or while it is in use or
2. The use of the vehicle after such device or element of design has been removed or rendered inoperative by any person.

Among those Acts Presumed to Constitute Tampering Are the Acts Listed Below:

1. Removal or alteration or the puncturing of the muffler or any engine component which conducts removal of engine exhaust gases.
2. Removal or alteration or the puncturing of any part of the intake system.
3. Replacing any moving parts of the vehicle or parts of the exhaust or intake system, with parts other than those specified by the manufacturer.
4. Lack of proper maintenance.

NOISE EMISSION AND VIBRATION VALUES

Machinery Directive 2006/42/EC Compliant Models

Noise emission and Vibration values are measured in accordance with Machinery Directive 2006/42/EC on a paved surface, at neutral or without belt.

MODEL		1000R
Noise Emission and Vibration Values		
Noise	Sound pressure level (LpA)	83 dB (A) (Uncertainty (KpA) 3dB)
	Sound power level (LWA)	97 dB (A) (Uncertainty (KwA) 3dB)
Vibration	Hand-arm system	Less than 2.5 m/s2
	Whole body at seat	Less than 0.5 m/s2

EU Declaration of Conformity

565 de la Montagne Street
Valcourt (Québec) J0E 2L0
Canada

www.brp.com

ADVENTURE BY DESIGN

EU Declaration of Conformity

Authorized Representative: BRP-Rotax GmbH Co. KG, Rotaxstrasse 1, Gunskirchen, A-4623 Austria

This declaration of conformity is issued under the sole responsibility of the manufacturer.

The undersigned, representing the manufacturer, hereby declares that model year **2026 Side by Side Vehicles** marked with the CE mark and a 17-character vehicle identification number (VIN) structured as **3JBxxxxxxTxxxxxxx** under commercial names **Can-Am Traxter, Can-Am Maverick Sport, Can-Am Maverick,** and **Can-Am Maverick R** comply with all the relevant provisions of the following Directives and Regulations:

Machinery (MD) Directive 2006/42/EC as amended up to and including Regulation (EU) 2019/1243	ISO 12100:2010 & EN 16990:2020
Non-Road Mobile Machinery (NRMM) Regulation (EU) 2016/1628 on gaseous pollutants as amended up to and including Regulation (EU) 2022/992	Category ATS, Stage V emission limits
Electromagnetic Compatibility (EMC) Directive 2014/30/EU as amended up to and including Regulation (EU) 2018/1139	CISPR 12:2007/A1:2009 & IEC 61000-6-1:2007 or UN R10.05 or later version
Battery Directive 2006/66/EC as amended up to and including Directive (EU) 2018/849 and,	
Regulation (EU) 1103/2010 on battery capacity labelling	EN 50342-7:2015
Radio Equipment (RED) Directive 2014/53/EU as amended up to and including Regulation (EU) 2023/1717 (If fitted with radio frequency (RF) D.E.S.S. key)	Art. 3.1a: IEC 62368-1:2014 Art. 3.1b: CISPR 25:2016 & ISO 11452-2:2004 Art. 3.2: ETSI EN 300 330 V2.1.1:2017

Luc Bouchard
Luc Bouchard (Mar 6, 2025 12:06 EST)

Luc Bouchard, Eng.
Director, Product Development, Can-Am SSV
Bombardier Recreational Products Inc.

Valcourt, QC, Canada

06/03/2025

SKI-DOO LYNX SEA-DOO EVINRUDE ROTAX CAN-AM

UK Declaration of Conformity

565 de la Montagne Street
Valcourt (Québec) J0E 2L0
Canada

www.brp.com

ADVENTURE BY DESIGN

UK Declaration of Conformity

Authorized Representative: BRP Recreational Products UK Ltd., Mitchell Charlesworth Suites C, D, E & F, 14th Floor The Plaza, 100 Old Hall Street, Liverpool, L3 9QJ

This declaration of conformity is issued under the sole responsibility of the manufacturer.

The undersigned, representing the manufacturer, hereby declares that model year **2026 Side by Side Vehicles** marked with the UK CA mark and a 17-character vehicle identification number (VIN) structured as **3JBxxxxxxTxxxxxxx** under commercial names **Can-Am Traxter**, **Can-Am Maverick Sport, Can-Am Maverick,** and **Can-Am Maverick R** comply with all the relevant provisions of the following Statutory Instruments:

Supply of Machinery (Safety) Regulations 2008, UK SI 2008/1597 as amended up to and including SI 2024/696	ISO 12100:2010 & EN 16990:2020
Non-Road Mobile Machinery (Type-Approval and Emission of Gaseous and Particulate Pollutants) Regulations 2018, UK SI 2018/764 as amended up to and including SI 2022/1273	Category ATS, Stage V emission limits
Electromagnetic Compatibility Regulations 2016, UK SI 2016/1091 as amended up to and including SI 2024/696	CISPR 12:2007/A1:2009 & IEC 61000-6-1:2007 or UN R10.05 or later version
Batteries and Accumulators (Placing on the Market) Regulations 2008, UK SI 2008/2164 as amended up to and including UK SI 2020/1540	EN 50342-7:2015
Radio Equipment Regulations 2017, UK SI 2017/1206 as amended up to and including SI 2024/1231 (If fitted with radio frequency (RF) D.E.S.S. key)	Art. 3.1a: IEC 62368-1:2014 Art. 3.1b: CISPR 25:2016 & ISO 11452-2:2004 Art. 3.2: ETSI EN 300 330 V2.1.1:2017

Luc Bouchard
Luc Bouchard (Mar 6, 2025 12:06 EST)

Luc Bouchard, Eng.
Director, Product Development, Can-Am SSV
Bombardier Recreational Products Inc.

Valcourt, QC, Canada

06/03/2025

ski-doo LYNX SEA-DOO EVINRUDE ROTAX can-am

EAC DECLARATION OF CONFORMITY

Left blank for Eurasian Conformity

mark where applicable

This page is intentionally blank

TECHNICAL SPECIFICATIONS

TECHNICAL SPECIFICATIONS

Engine		
Engine type		ROTAX 1000R
		Twin cylinder. 4-stroke, Single Over Head Camshaft (SOHC), liquid cooled
Number of cylinders		2
Number of valves		8 valves (mechanical adjustment)
Intake valve clearance		0.06 to 0.14 mm (.0024 to .0055 in)
Exhaust valve clearance		0.11 to 0.19 mm (.0043 to .0075 in)
Bore		91 mm (3.58 in)
Stroke		75 mm (2.95 in)
Displacement		976 cm³ (59.56 in³)
Exhaust system	NRMM models	Catalyst
	Other models	Spark arrestor approved by USDA Forest Service
Air filter		Synthetic paper filter

Lubrication System		
Type		Wet sump
Oil filter		Replaceable cartridge oil filter (paper type)
Engine oil	Capacity	2 l (2.1 qt (liq.,US))
	Recommended XPS oil	See *Recommended Engine Oil* in the *Maintenance Procedures* section of this guide

Cooling System		
Coolant	Recommended XPS coolant	See Recommended Engine Coolant in the Maintenance Procedures section of this guide
	Capacity	6.7 l (1.77 gal (liq.,US))

Transmission	
Type	CVT (Continuously Variable Transmission)
Engagement	1850 ± 100 RPM

Gearbox		
Type		Dual range (HI-LO) with PARK, neutral and reverse
Gearbox oil	Capacity	Approximately: 1.25 l (1.3 qt (liq.,US))
	Recommended XPS gearbox oil	See Recommended Gearbox Oil in the Maintenance Procedures section of this guide

Electrical System		
Magneto generator output		650 W @ 5000 RPM
Ignition system type		IDI (Inductive Discharge Ignition)
Spark plug	Quantity	2
	Make and type	NGK LMAR8C-9
	Gap	0.8 to 0.9 mm (.031 to .035 in)
Battery	Type	Maintenance free - SLA (Sealed Lead Acid)
	Voltage	12 volts

Electrical System		
	Nominal rating	20 A•h
	Power starter output	0.7 kW
Headlight		2x 55W (H11)
Taillight		LED
Fuses		Refer to *Fuses* in the *Maintenance* section

Fuel System		
Fuel delivery		Electronic fuel injection (EFI) with iTC
Throttle body		54 mm with ETA
Fuel pump		Electric (in fuel tank)
Idle speed	ECO mode	1350 ± 100 RPM
	SPORT mode	1500 ± 100 RPM
Fuel	Type	Premium unleaded gasoline
	Minimum Octane rating	91 AKI (R+M)/2 95 RON
Fuel tank capacity		± 38 l (10 gal (liq.,US))
Fuel remaining when low fuel light turns ON		± 8.5 l (2.2 gal (liq.,US))

Drive System		
Drive system type		Selectable 2WD/4WD
Front differential oil	Capacity	400 ml (14 fl oz (US))
	Recommended XPS differential oil	See Recommended Front Differential Oil in the Maintenance Procedures section of this guide
Front drive		Selectable 2WD / 4WD with auto-locking front differential, spiral gears

Drive System		
Front drive ratio		3.6:1
Rear drive		Lockable differential
Rear drive ratio		3.43:1
CV joint grease		XPS CV joint grease
Spline's propeller shaft grease (grease applied to spline connections)		XPS Propeller shaft grease or equivalent

Steering		
Type		Rack and pinion
Steering wheel		Adjustable tilt steering

Front Suspension		
Suspension type		Double suspension arms with stabilizer bar
Suspension travel		292 mm (11.5 in)
Shock absorber	Quantity	2
	Type	HPG
Preload adjustment		Threaded

Rear Suspension		
Suspension type		Double suspension arms with stabilizer bar
Suspension travel		305 mm (12 in)
Shock absorber	Quantity	2
	Type	HPG
Preload adjustment		Threaded

Brakes		
Front brake	Qty	2

Brakes		
	Type	220 mm (8.7 in) ventilated brake disc with hydraulic twin-pistons calipers of 32 mm (1.26 in)
Rear brake	Qty	2
	Type	220 mm (8.7 in) ventilated brake disc with hydraulic twin-pistons calipers of 28 mm (1.1 in)
Brake fluid	Type	DOT 4
	Capacity	Approximately 295 ml (10 fl oz (US))
Caliper		Floating
Brake pad material		Metallic
Minimum brake pad thickness		0.5 mm (.02 in)
Minimum brake disc thickness		4 mm (.157 in)
Maximum brake disc warpage		0.2 mm (.01 in)

Tires		
Pressure		Recommended tire inflation pressure is found on the Tire Label. Refer to appropriate *Important On-Product Labels* section for its location.
Tire size	Front	686 x 229 x 305 mm (27 x 9 x 12 in)
	Rear	686 x 279 x 305 mm (27 x 11 x 12 in)
Minimum tire thread depth		3 mm (.118 in)

Wheels		
Type		Cast aluminum wheels
Rim size	Front	30.5 x 15.24 cm (12 x 6 in)
	Rear	30.5 x 19.05 cm (12 x 7.5 in)
Wheel lug nuts torque		100 ± 10 Nm (74 ± 7 lbf-ft)
Wheel Offset	Front	41.2 mm (1.6 in)
	Rear	51 mm (2 in)

Chassis	
Cage type	Profiled tube section, high strength steel, ISO 3471 certified

Dimensions		
Overall length		378.4 cm (149 in)
Overall width		152.4 cm (60 in)
Overall height		193.5 cm (76.2 in)
Wheelbase		306.3 cm (120.6 in)
Wheel track	Front	128 cm (50.4 in)
	Rear	123 cm (48,2 in)
Ground clearance		30.5 cm (12 in)

Loading Capacity and Weight	
Dry weight	796.1 kg (1,755 lb)
Weight distribution (front/rear)	42/58
Cargo box capacity	91 kg (300 lb)
Total vehicle load allowed (including driver, passengers, all other loads and added accessories)	481 kg (1,060 lb)
Gross vehicle weight rating	1291 kg (2,846 lb)
Towing capacity	680 kg (1,500 lb)
Tongue capacity	68 kg (150 lb)
Receiver Hitch	50.8 x 50.8 mm (2 x 2 in)

TROUBLESHOOTING

TROUBLESHOOTING GUIDELINES

CVT Belt Is Slipping

1. Water has entered in the CVT.

– *Refer to Special Procedures.*

"–" Is Displayed On the Gearbox Position Display

1. Shift lever is between 2 positions.

– *Properly position the shift lever in the desired position.*

2. Shift lever is not properly adjusted.

– *Contact an authorized Can-Am Off-road dealer.*

3. Electrical communication error.

– *Contact an authorized Can-Am Off-road dealer.*

Engine Does Not Turn

1. Starting procedure not performed correctly.

– *Refer to Starting the Engine.*

2. Shift lever is not set on PARK.

– *Set shift lever to either in PARK or press the brake pedal.*

3. Burnt fuse.

– *Check fuses.*

4. Weak battery or loose connections.

– *Check charging system fuse.*
– *Check fault message in cluster.*
– *Check battery connections and terminals condition.*
– *Have the battery checked by an authorized Can-Am Off-road dealer.*

5. Defective starter solenoid.

– *Contact an authorized Can-Am Off-road dealer.*

6. D. E. S. S. key is not installed on D. E. S. S. post. (if equipped)

– *Securely install key to D.E.S.S. post.*

7. D.E.S.S. key not recognized is displayed in the multifunction gauge. (If equipped)

– *Clean D.E.S.S. key. If message still displayed after cleaning, see an authorized Can-Am Off-road dealer.*

Engine Turns Over But Fails To Start

1. Flooded engine

– *Active the drowned mode to start the engine. Refer to Flooded Engine in Special Procedures section.*

2. No fuel to the engine (spark plug dry when removed).

– *Check fuel tank level.*
– *Check fuel pump fuse.*
– *Obstructed fuel pump pre-filter or fuel pump failure.*

See an authorized Can-Am Off-road dealer, a repair shop, or a person of your own choosing for maintenance, repair, or replacement.

Please refer to the US EPA Emission-Related Warranty contained herein for information about warranty claims.

3. Spark plug/ignition (no spark).

– *Check ignition fuse.*
– *Remove spark plug then reconnect to ignition coil.*
– *Start engine with spark plug grounded to the engine away from spark plug hole. If no spark appears, replace spark plug.*

If trouble persists, see an authorized Can-Am Off-road dealer, a repair shop, or a person of your own choosing for maintenance, repair, or replacement.

Please refer to the US EPA Emission-Related Warranty contained herein for information about warranty claims.

Engine Lacks Acceleration or Power

1. Seat belt not buckled properly. Check cluster message.

– *Buckle up seat belt.*

2. Fouled or damaged spark plug.

– *Replace spark plugs.*

3. Engine air filter plugged or dirty.

– *Check air filter and replace if necessary.*
– *Check deposits in engine air filter housing.*

4. Water in CVT

– *Drain water from CVT. Refer to Special Procedures section.*

5. CVT dirty or worn-out.

– *Contact an authorized Can-Am Off-road dealer.*

6. Lack of fuel

– *Dirty or clogged fuel pump pre-filter. See an authorized Can-Am Off-road dealer, a repair shop, or a person of your own choosing for maintenance, repair, or replacement. Please refer to the US EPA Emission-Related Warranty contained herein for information about warranty claims.*

7. Engine is in Torque Limitation mode (if equipped).

– *Engine torque is gradually limited for protection when coolant temperature is too high. Check multifunction gauge display for engine temperature.*
– *Let engine cool down.*

8. Engine is in limp home mode.

– *Multifunction gauge CHECK ENGINE indicator lamp is on and display shows LIMP HOME. See an authorized Can-Am Off-road dealer, a repair shop, or a person of your own choosing for maintenance, repair, or replacement. Please refer to the US EPA Emission-Related Warranty contained herein for information about warranty claims.*

Engine Overheats

1. Low coolant level in cooling system.

– *Check coolant level and refill. See Maintenance Procedures. Seek service from an authorized Can-Am Off-road dealer, a repair shop, or a person of your own choosing for maintenance, repair, or replacement. Please refer to the US EPA Emission-related warranty contained herein for information about warranty claims.*

2. Cooling fan is not working.

– *Ensure cooling fan is not jammed and working properly.*
– *Check fan fuse. See Fuses and Fusible Links in the Maintenance Procedures.*

3. Dirty radiators fins.

– *Check and clean radiator fins. See Maintenance Procedures.*

Engine Misfire

1. Fouled/damaged/worn spark plug.

– *Replace spark plugs as required.*

2. Water in fuel.

– *Drain fuel system and refill with fresh fuel.*

The RPM Increases But the Vehicle Does Not Move

1. Water in the CVT.

– *Drain water from CVT. See Special Procedures section.*

2. CVT dirty or worn-out or belt failure.

– *Contact an authorized Can-Am Off-road dealer.*

Partial or No Response From the Accelerator Pedal - Check Engine Is ON and PPS Fault Message Is Displayed

1. Partial failure of the accelerator pedal sensors (PPS).

– *Contact an authorized Can-Am Off-road dealer.*

2. Total failure of the accelerator pedal sensors (PPS).

– *Contact an authorized Can-Am Off-road dealer.*

DIGITAL DISPLAY MESSAGES

If an abnormal engine condition occurs, the following messages can be combined with a pilot lamp.

Message	Description
D.E.S.S. KEY NOT RECOGNIZED	D.E.S.S. key requires cleaning. If message still displayed after cleaning, See an authorized Can-Am Off-road dealer.
BAD KEY	Indicates that you have used the wrong D.E.S.S. key, use the proper key for this vehicle.
CHECK ENGINE	All active or previously activated faults that require attention. No engine limitation engaged.
LIMP HOME	Critical faults requiring diagnostic as soon as possible. An engine limitation is engaged and/or the engine behavior is modified.
TPS FAULT	Throttle body fault, generally followed by a Limp Home message.
BRAKE SWITCH FAULT	Brake signal fault.
CHECK DPS	Check engine pilot light on. Indicates that the DPS (Dynamic Power Steering) does not work properly. See an authorized Can-Am Off-road dealer.
PPS FAULT	Faulty Pedal Position Sensor(s) (PPS). See an authorized Can-Am Off-road dealer.
FUEL SENSOR FAULT	When the fuel sender resistor value is out of range the digital display module will detect it and display the message.
CHECK SMART-LOK	Check engine pilot light on. Indicates that the Smart-Lok does not work properly. See an authorized Can-Am Off-road dealer.

WARRANTY

BRP LIMITED WARRANTY FOR CANADA AND USA: 2026 CAN-AM® SSV

1) Scope of the Limited Warranty

Bombardier Recreational Products Inc. ("**BRP**") warrants its 2026 Can-Am SSV (the "**Product**") sold by an authorized dealer in the United States of America ("**USA**") and in Canada from defects in material or workmanship for the period and under the conditions described below.

This limited warranty will become null and void if:

1. the Product was used for racing or any other competitive activity, at any point, even by a previous owner; or
2. the Product has been altered or modified in such a way so as to adversely affect its operation, performance or durability, or has been altered or modified to change its intended use.

Non-factory installed parts and accessories are not covered under this limited warranty. Please refer to the applicable parts and accessories limited warranty text.

2) Limitations of Liability

TO THE EXTEND PERMITTED BY LAW, THIS WARRANTY IS EXPRESSLY GIVEN AND ACCEPTED IN LIEU OF ANY AND ALL OTHER WARRANTIES, EXPRESSED OR IMPLIED, INCLUDING WITHOUT LIMITATION ANY WARRANTY OF MERCHANTABILITY OR FITNESS FOR A PARTICULAR PURPOSE. TO THE EXTENT THAT THEY CANNOT BE DISCLAIMED, THE IMPLIED WARRANTIES ARE LIMITED IN DURATION TO THE LIFE OF THE EXPRESS WARRANTY. INCIDENTAL AND CONSEQUENTIAL DAMAGES ARE EXCLUDED FROM COVERAGE UNDER THIS WARRANTY. SOME STATES/PROVINCES DO NOT ALLOW FOR THE DISCLAIMERS, LIMITATIONS AND EXCLUSIONS IDENTIFIED ABOVE. AS A RESULT, THEY MAY NOT APPLY TO YOU. THIS WARRANTY GIVES YOU SPECIFIC RIGHTS, AND YOU MAY ALSO HAVE OTHER LEGAL RIGHTS WHICH MAY VARY FROM STATE TO STATE, OR PROVINCE TO PROVINCE.

Neither the distributor, any BRP Dealer nor any other person has been authorized to make any affirmation, representation or warranty regarding the Product, other than those contained in this limited warranty, and if made, shall not be enforceable against BRP.

BRP reserves the right to modify this limited warranty at any time, being understood that such modification will not alter the warranty conditions applicable to the Products sold while this warranty is in effect.

3) EXCLUSIONS – Are Not Warranted

The following are not warranted under any circumstances:

- Normal wear and tear;
- Routine maintenance items, tune ups, adjustments;
- Damage caused by negligence or failure to provide proper maintenance and/or storage, as described in the Operator's Guide;
- Damage resulting from removal of parts, improper repairs, service, maintenance, modifications or use of parts not manufactured or approved by BRP or

resulting from repairs done by a person that is not an authorized servicing BRP Dealer;
– Damage caused by abuse, abnormal use, neglect or operation of the Product in a manner inconsistent with the recommended operation described in the Product's Operator's Guide;
– Damage resulting from accident, submersion, fire, theft, vandalism or any act of God;
– Operation with fuels, oils or lubricants which are not suitable for use with the Product (see the Operator's Guide);
– Damages from rust, corrosion or exposure to the elements;
– Damage resulting from water or snow ingestion;
– Incidental or consequential damages, or damages of any kind including without limitation transportation expenses, towing, storage, telephone, rental, taxi, inconvenience, insurance coverage, loan payments, loss of time, loss of income or time missed for downtime experience due to service work.

4) Warranty Coverage Period

This limited warranty will be in effect from (1) the date of delivery to the first retail consumer, or (2) the date the Product is first put into use, whichever occurs first and for the applicable period below:

1. **TWELVE (12) consecutive months**, for private use or commercial use owners.
2. **For emission-related components**, please also refer to the US EPA Emission-Related Warranty.
3. **For evaporative emission-related components of California models equipped with evaporative emission control system produced by BRP for sale in the State of California** that are originally sold to a resident or subsequently warranty registered to a resident in the State of California, also refer to the California Evaporative Emissions Control Warranty Statement.

The repair or replacement of parts or the performance of service under this warranty does not extend the life of this limited warranty beyond its original expiration date.

5) Conditions to Have Warranty Coverage

This warranty coverage is available only if each of the following conditions has been fulfilled:

1. The Product must be purchased as new and unused by its first owner from a Dealer authorized to sell the Product in the country in which the sale occurred ("Dealer");
2. The BRP specified pre-delivery inspection process must be completed, documented and signed by the purchaser;
3. The Product must have undergone proper registration by an authorized Dealer;
4. The Product must be purchased in the country in which the purchaser resides;
5. Routine maintenance outlined in the Operator's Guide must be timely performed in order to maintain warranty coverage. BRP reserves the right to make warranty coverage contingent upon proof of proper maintenance.

BRP will not honor this limited warranty to any private use owner or commercial use owner if one of the preceding conditions has not been met. Such limitations are necessary in order to allow BRP to preserve both the safety of its products, and also that of its consumers and the general public.

6) What to Do to Obtain Warranty Coverage

The customer must cease using the Product upon the appearance of an anomaly, notify a servicing BRP Dealer within three (3) days of the appearance of the anomaly and provide the Dealer with reasonable access to the Product and reasonable opportunity to repair it.

The customer must also present to the Dealer, proof of purchase of the Product and must sign the repair/work order prior to starting the repair in order to validate the warranty repair.

All parts replaced under this limited warranty become the property of BRP.

7) What BRP Will Do

BRP's obligations under this warranty are limited to, at its sole discretion, repairing or replacing parts found defective under normal use, maintenance and service without charge for parts and labor, at any authorized BRP Dealer during the warranty coverage period under the conditions described herein. No claim of breach of warranty shall be cause for cancellation or rescission of the sale of the Product to the owner.

In the event that service is required outside of the country of original sale, the owner will bear responsibility for any additional charges due to local practices and conditions, such as, but not limited to, freight, insurance, taxes, license fees, import duties, and any and all other financial charges, including those levied by governments, states, territories and their respective agencies.

BRP reserves the right to improve or modify products from time to time without assuming any obligation to modify products previously manufactured.

8) Transfer

If the ownership of a Product is transferred during the warranty coverage period, this limited warranty, subject to its terms and conditions, shall also be transferred and be valid for the remaining coverage period provided BRP or an authorized Product Distributor/Dealer receives a proof that the former owner agreed to the transfer of ownership, in addition to the coordinates of the new owner.

9) Consumer Assistance

In the event of a controversy or a dispute in connection with this limited warranty, BRP suggests that you try to resolve the issue at the dealership level. We recommend discussing the issue with the authorized Dealer's service manager or owner.

If the matter still remains unresolved, contact BRP by filling out the customer contact form at **www.brp.com** or contact BRP by mail at one of the addresses listed under the *Contact Us* section of this guide.

US EPA EMISSION - RELATED WARRANTY

Bombardier Recreational Products Inc. (“BRP”) warrants to the ultimate purchaser and each subsequent purchaser that this new vehicle, including all parts of its exhaust emission control system and its evaporative emission control system, meets two conditions:

1. It is designed, built, and equipped so it conforms at the time of sale to the ultimate purchaser with the requirements of 40 CFR 1051 and 40 CFR 1060.
2. It is free from defects in materials and workmanship that may keep it from meeting the requirements of 40 CFR 1051 and 40 CFR 1060.

Where a warrantable condition exists, BRP will repair or replace, as it elects, any part or component with a defect in materials or workmanship that would increase the engine’s emissions of any regulated pollutant within the stated warranty period at no cost to the owner, including expenses related to diagnosing and repairing or replacing emission-related parts. All defective parts replaced under this warranty become the property of BRP.

For all emission-related warranty claims, BRP is limiting the diagnosis and repair of emission-related parts to the authorized Can-Am dealers, unless for emergency repairs as required by item 2 of the following list.

As a certifying manufacturer, BRP will not deny emission-related warranty claims based on any of the following:

1. Maintenance or other service BRP or BRP's authorized facilities performed.
2. Engine/equipment repair work that an operator performed to correct an unsafe, emergency condition attributable to BRP as long as the operator tries to restore the engine/equipment to its proper configuration as soon as possible.
3. Any action or inaction by the operator unrelated to the warranty claim.
4. Maintenance that was performed more frequently than BRP specify.
5. Anything that is BRP fault or responsibility.
6. The use of any fuel that is commonly available where the equipment operates unless BRP written maintenance instructions state that this fuel would harm the equipment’s emission control system and operators can readily find the proper fuel. See maintenance information section and fuel requirements of fueling section.

Emission-Related Warranty Period

The emission-related warranty is valid for the following period whichever comes first.

	HOURS	MONTHS	KILOMETERS
Exhaust and evaporative emission-related components	500	30	5000

Components Covered

The emission-related warranty covers all components whose failure would increase an engine’s emissions of any regulated pollutant, including the following listed components:

1. For exhaust emissions, emission-related components include any engine parts related to the following systems:

- Air-induction system
- Fuel system
- Ignition system
- Exhaust gas recirculation systems.

2. The following parts are also considered emission-related components for exhaust emissions:
   - After treatment devices
   - Crankcase ventilation valves
   - Sensors
   - Electronic control units.
3. The following parts are considered emission-related components for evaporative emissions:
   - Fuel tank
   - Fuel cap
   - Fuel line
   - Fuel line fittings
   - Clamps*
   - Pressure relief valves*
   - Control valves*
   - Control solenoids*
   - Electronic controls*
   - Vacuum control diaphragms*
   - Control cables*
   - Control linkages*
   - Purge valves
   - Vapor hoses
   - Liquid/vapor separator
   - Carbon canister
   - Canister mounting brackets
   - Carburetor purge port connector.

NOTE:
*As related to the evaporative emission control system.

4. Emission-related components also include any other part whose only purpose is to reduce emissions or whose failure will increase emissions without significantly degrading engine/equipment performance.

Limited Applicability

As a certifying manufacturer, BRP may deny emission-related warranty claims for failures that have been caused by the owner's or operator's improper maintenance or use, by accidents for which the manufacturer has no responsibility, or by acts of God. For example, an emission-related warranty claim need not be honored for failures that have been directly caused by the operator's abuse of the engine/equipment or the operator's use of the engine/equipment in a manner for which it was not designed and are not attributable to the manufacturer in anyway.

If you have any question regarding your warranty rights and responsibility or for the name and location of the nearest authorized BRP dealer, you should contact BRP by filling out the customer contact form at **www.brp.com** or contact BRP by

mail at one of the addresses listed under the CONTACT US section of this guide, or call at 1-888-272-9222.

CALIFORNIA EVAPORATIVE EMISSIONS CONTROL WARRANTY STATEMENT

The warranty periods begin on the date the new Off-Highway Recreational Vehicle (“OHRV”) is delivered to an ultimate purchaser.

Bombardier Recreational Products Inc. (“BRP”) warrants to the ultimate purchaser and each subsequent purchaser that the OHRV is:

1. Designed, built, and equipped so as to conform, at the time of sale, with all applicable laws, rules and regulations; and
2. Free from defects in materials and workmanship that may cause the failure of a warranted part. All replacement parts must be identical in all material respects to that part as described in BRP’s Executive Order of Certification application.

The warranty on emissions-related parts function as follows:

1. Repair or replacement of any warranted part must be performed at no charge to the OHRV owner, at a warranty station, except in the case of a temporary repair when a warranted part or a warranty station is not reasonably available to the OHRV owner. In the event a temporary repair is permitted, repairs may be performed at any available service establishment, or by the owner, using any replacement part. BRP must reimburse the owner for his or her expenses including diagnostic charges for such temporary repair or replacement, not to exceed BRP's suggested retail price for all warranted parts replaced and labor charges based on BRP's recommended time allowance for the warranty repair and the geographically appropriate hourly labor rate.
2. The lack of availability of warranted parts or the incompleteness of repairs within a reasonable time period, not to exceed 30 days from the time the OHRV is initially presented to the warranty station for repair, will qualify the need for a temporary repair.
3. Any warranted part which is not scheduled for replacement as part of maintenance in the written instructions must be warranted for the warranty period defined below. If any such part fails during the warranty period, it must be repaired or replaced by BRP. Any such part repaired or replaced under warranty must be fully warranted.
4. Any warranted part which is scheduled only for regular inspection in the written instructions must be warranted for the warranty period defined below. A statement in such written instructions to the effect of “repair or replace as necessary” does not reduce the period of warranty coverage. Any such part repaired or replaced under warranty is warranted for the remaining warranty period.
5. Any warranted part which is scheduled for replacement as part of maintenance in the written instructions is warranted for the period of time prior to the first scheduled replacement point for that part. If the part fails before the first scheduled replacement point, the part will be repaired or replaced by BRP. Any such part repaired or replaced under warranty is warranted for the remainder of the period prior to the first scheduled replacement point for the part.
6. Warranty services or repairs are provided at all manufacturer dealerships that are owned by the manufacturer or franchised to service the subject OHRVs.
7. The OHRV owner will not be charged for diagnostic labor which leads to the determination that a warranted part is, in fact, defective, provided that such diagnostic work is performed at a warranty station.

8. BRP is liable for damages to other vehicle components proximately caused by a failure, under warranty, of any warranted part.
9. Any replacement part designated by BRP may be used in warranty repairs provided without charge to the OHRV owner. Such use will not reduce the warranty obligations of BRP, except that BRP will not be liable for repair or replacement of any replacement part which is not a warranted part.
10. Any add-on or modified part exempted by the Air Resources Board from the prohibitions of section 27156 of the California Vehicle Code may be used on an OHRV. Such use, in and of itself, will not be grounds for disallowing a warranty claim. BRP is not liable to warrant failures of warranted parts caused by the use of an add-on or modified part (s) unless such part (s) are also warranted.

Conditions and exclusions:

– BRP may deny you warranty coverage if your OHRV or a part has failed directly due to abuse, neglect, improper maintenance or unapproved modifications.

Your Warranty Rights And Obligations

The California Air Resources Board is pleased to explain the evaporative emissions control system warranty on your 2026 Off-Road Sport Vehicle. In California, new off-highway recreational vehicles must be designed, built, and equipped to meet the State's stringent anti-smog standards. BRP must warrant the evaporative emissions control system on your Off-Road Sport Vehicle for the periods of time listed below provided there has been no abuse, neglect, improper maintenance, or unapproved modification of your Off-Road Sport Vehicle.

Your evaporative emissions control system may include parts such as the carburetor or fuel-injection system, fuel tank, fuel hoses, carbon canister, and engine computer. Also included may be hoses, belts, connectors and other evaporative emissions-related assemblies. Where a warrantable condition exists, Bombardier Recreational Products Inc. will repair your Off-Road Sport Vehicle at no cost to you including diagnosis, parts and labor.

OHRV Manufacturer's Warranty Coverage

The warranty period for this OHRV is 60 months, or 5000 miles, or 500 hours, whichever comes first.

Parts covered:

1. Canister Mounting Bracket(s)
2. Carbon Canister
3. Purge Port Connector
4. Clamp(s)*
5. Electronic Control*
6. Fuel Cap
7. Filler Neck
8. Filler Neck Hose
9. Fuel Line(s)
10. Fuel Line Fitting(s)
11. Fuel Tank
12. Pressure Relief Valve(s)*

13. Purge Valve(s)
14. Check Valve(s)*
15. Vapor Hose(s)
16. Flow Reducer
17. Filter(s)*
18. Fuel pump
19. All other parts not listed that may affect the evaporative emissions control system

NOTE:
*As related to the evaporative emission control system.

If any evaporative emissions-related part on your Off-Road Sport Vehicle is defective the part will be repaired or replaced by Bombardier Recreational Products Inc.

Owner's Warranty Responsibilities

As the Off-Road Sport Vehicle owner you are responsible for the performance of the required maintenance listed in your owner's manual. Bombardier Recreational Products Inc. recommends that you retain all receipts covering maintenance on your Off-Road Sport Vehicle, but Bombardier Recreational Products Inc. cannot deny warranty solely for the lack of receipts or for failure to ensure the performance of a scheduled maintenance.

As an owner you are responsible for presenting your Off-Road Sport Vehicle to a Bombardier Recreational Products Inc. dealer as soon as a problem exists. The warranty repairs should be completed in a reasonable time, not to exceed 30 days.

As an Off-Road Sport Vehicle owner, you should also be aware that Bombardier Recreational Products Inc. may deny you warranty coverage if your Off-Road Sport Vehicle or a part has failed due to abuse, neglect, improper maintenance or unapproved modifications.

If you have any questions regarding your warranty rights and responsibilities, you should contact:

– Bombardier Recreational Products Inc. at 1-888-272-9222, or
– The California Air Resources Board at 4001 Iowa Avenue, Riverside, CA 92507.

BRP LIMITED WARRANTY FOR INTERNATIONAL: 2026 CAN-AM® SSV

1) Scope of the Limited Warranty

Bombardier Recreational Products Inc. ("**BRP**") warrants its 2026 Can-Am SSV (the "**Product**") sold by distributors or dealers authorized by BRP to distribute the Products outside of the United States of America ("**USA**"), Canada, member states of the European Economic Area (which is comprised of the states of the European Union plus the United Kingdom, Norway, Iceland and Liechtenstein) ("**EEA**"), member states of the Commonwealth of the Independent States (including Ukraine and Turkmenistan) ("**CIS**") and Turkey from defects in material or workmanship for the period and under the conditions described below.

This limited warranty will become null and void if:

1. the Product was used for racing or any other competitive activity, at any point, even by a previous owner; or
2. the Product has been altered or modified in such a way so as to adversely affect its operation, performance or durability, or has been altered or modified to change its intended use.

Non-factory installed parts and accessories are not covered under this limited warranty. Please refer to the applicable parts and accessories limited warranty text.

2) Limitation of Liability

TO THE EXTEND PERMITTED BY LAW, THIS WARRANTY IS EXPRESSLY GIVEN AND ACCEPTED IN LIEU OF ANY AND ALL OTHER WARRANTIES, EXPRESSED OR IMPLIED, INCLUDING WITHOUT LIMITATION ANY WARRANTY OF MERCHANTABILITY OR FITNESS FOR A PARTICULAR PURPOSE. TO THE EXTENT THAT THEY CANNOT BE DISCLAIMED, THE IMPLIED WARRANTIES ARE LIMITED IN DURATION TO THE LIFE OF THE EXPRESS WARRANTY. INCIDENTAL AND CONSEQUENTIAL DAMAGES ARE EXCLUDED FROM COVERAGE UNDER THIS WARRANTY. SOME JURISDICTIONS DO NOT ALLOW FOR THE DISCLAIMERS, LIMITATIONS AND EXCLUSIONS IDENTIFIED ABOVE. AS A RESULT, THEY MAY NOT APPLY TO YOU. THIS WARRANTY GIVES YOU SPECIFIC RIGHTS, AND YOU MAY ALSO HAVE OTHER LEGAL RIGHTS WHICH MAY VARY FROM COUNTRY TO COUNTRY. BRP SHALL NOT BE HELD LIABLE IF PRODUCTS OR WARRANTY PARTS ARE NOT AVAILABLE IN CERTAIN COUNTRIES FOR REASONS OUTSIDE OF BRP'S CONTROL.

For Products purchased in Australia, refer to the Australia specific section below.

Neither the distributor, the BRP Distributor/Dealer nor any other person has been authorized to make any affirmation, representation or warranty regarding the Product, other than those contained in this limited warranty, and if made, shall not be enforceable against BRP.

BRP reserves the right to modify this limited warranty at any time, being understood that such modification will not alter the warranty conditions applicable to the Products sold while this warranty is in effect.

3) EXCLUSIONS – Are Not Warranted

The following are not warranted under any circumstances:

- Normal wear and tear;
- Routine maintenance items, tune ups, adjustments;
- Damage caused by negligence or failure to provide proper maintenance and/ or storage, as described in the Operator's Guide;
- Damage resulting from removal of parts, improper repairs, service, maintenance, modifications or use of parts not manufactured or approved by BRP or resulting from repairs done by a person that is not an authorized servicing BRP Distributor/ Dealer;
- Damage caused by abuse, abnormal use, neglect or operation of the product in a manner inconsistent with the recommended operation described in the Product’s Operator’s Guide;
- Damage resulting from accident, submersion, fire, theft, vandalism or any act of God;
- Operation with fuels, oils or lubricants which are not suitable for use with the Product (see the Operator’s Guide);
- Damages from rust, corrosion or exposure to the elements;
- Damage resulting from water or snow ingestion;
- Incidental or consequential damages, or damages of any kind including without limitation transportation expenses, towing, storage, telephone, rental, taxi, inconvenience, insurance coverage, loan payments, loss of time, loss of income or time missed for downtime experience due to service work.

The following list includes, without limitation, items that are considered wear items and that are not covered under BRP's limited warranty unless failure is a direct result of a defect in material or workmanship:

- Batteries
- Brake pads
- Brake disks and drums
- Clutch plates / pads
- Clutch sliders
- Clutch springs
- Clutch replaceable bushings
- Drive belts
- Filters
- Finished and unfinished surfaces
- Fuses
- Light bulbs / sealed beam
- Lubricants
- Spark plugs
- Suspension bushings
- Suspension slider shoes
- Suspension springs
- Tires.

4) Warranty Coverage Period

This limited warranty will be in effect from (1) the date of delivery to the first retail consumer, or (2) the date the Product is first put into use, whichever occurs first and for the applicable period below:

1. **TWELVE (12) consecutive months**, for private use or commercial use owners.

In AUSTRALIA and NEW ZEALAND only, this warranty will be in effect from (1) the date of delivery to the first retail consumer or (2) the date the Product is first put into use, whichever occurs first, and for a period of TWELVE (12) CONSECUTIVE MONTHS and THIRTY-SIX (36) CONSECUTIVE MONTHS for Powertrain Engine and Transmission systems only, for private use or commercial use.

The repair or replacement of parts or the performance of service under this warranty does not extend the life of this warranty beyond its original expiration date.

The warranty coverage period identified above are a minimal limited warranty period which can be extended by any applicable warranty promotional program, as the case may be.

Note that the duration and any other modalities of the warranty coverage are subject to the applicable national or local legislation in the customer's country.

5) For Products Sold In Australia Only

Our goods come with guarantees that cannot be excluded under the Australian Consumer Law.

You are entitled to a replacement or refund for a major failure and for compensation for any other reasonably foreseeable loss or damage.

You are also entitled to have the goods repaired or replaced if the goods fail to be of acceptable quality and the failure does not amount to a major failure.

Nothing in these Warranty terms and conditions should be taken to exclude, restrict or modify the application of any condition, warranty, guarantee, right or remedy conferred or implied under the Competition and Consumer Act 2010 (Cth), including the Australian Consumer Law or any other law, where to do so would contravene that law, or cause any part of these terms and conditions to be void. The benefits given to you under this limited warranty are in addition to other rights and remedies that you have under Australian law.

6) Conditions to Have Warranty Coverage

This warranty coverage is available only if each of the following conditions has been fulfilled:

1. Distributor/Dealer authorized to distribute the Product in the country in which the sale occurred (“Distributor/Dealer”);
2. The BRP specified pre-delivery inspection process must be completed, documented and signed by the purchaser;
3. The Product must have undergone proper registration by an authorized Distributor/Dealer;
4. The Product must be purchased in the country in which the purchaser resides;
5. Routine maintenance outlined in the Operator’s Guide must be timely performed in order to maintain warranty coverage. BRP reserves the right to make warranty coverage contingent upon proof of proper maintenance.

BRP will not honor this limited warranty to any private use owner or commercial use owner if one of the preceding conditions has not been met. Such limitations are necessary in order to allow BRP to preserve both the safety of its products, and also that of its consumers and the general public.

7) What to Do to Obtain Warranty Coverage

The customer must cease using the Product upon the appearance of an anomaly, notify a servicing BRP Distributor/Dealer within two (2) months of the appearance of the anomaly and provide the Distributor/Dealer with reasonable access to the Product and reasonable opportunity to repair it.

The notification period is subject to the applicable national or local legislation in customer's country.

The customer must also present to the Distributor/Dealer, proof of purchase of the Product and must sign the repair/work order prior to starting the repair in order to validate the warranty repair.

All parts replaced under this limited warranty become the property of BRP.

8) What BRP Will Do

To the extent permitted by law, BRP’s obligations under this warranty are limited to, at its sole discretion, repairing or replacing parts found defective under normal use, maintenance and service without charge for parts and labor, at any authorized BRP Distributor/Dealer during the warranty coverage period under the conditions described herein. No claim of breach of warranty shall be cause for cancellation or rescission of the sale of the Product to the owner. You may have other legal rights which may vary from country to country.

In the event that service is required outside of the country of original sale, the owner will bear responsibility for any additional charges due to local practices and conditions, such as, but not limited to, freight, insurance, taxes, license fees, import duties, and any and all other financial charges, including those levied by governments, states, territories and their respective agencies.

BRP reserves the right to improve or modify products from time to time without assuming any obligation to modify products previously manufactured.

9) Transfer

If the ownership of a Product is transferred during the warranty coverage period, this limited warranty, subject to its terms and conditions, shall also be transferred and be valid for the remaining coverage period provided BRP or an authorized Product Distributor/Dealer receives a proof that the former owner agreed to the transfer of ownership, in addition to the coordinates of the new owner.

10) Consumer Assistance

In the event of a controversy or a dispute in connection with this limited warranty, BRP suggests that you try to resolve the issue at the BRP dealership level. We recommend discussing the issue with the authorized Distributor/Dealer's service manager or owner.

If the matter still remains unresolved, contact BRP by filling out the customer contact form at **www.brp.com** or contact BRP by mail at one of the addresses listed under the *Contact Us* section of this guide.

BRP LIMITED WARRANTY FOR THE EUROPEAN ECONOMIC AREA, THE COMMONWEALTH OF THE INDEPENDENT STATES AND TURKEY: 2026 CAN-AM® SSV

1) Scope of the Limited Warranty

Bombardier Recreational Products Inc. ("**BRP**") warrants its 2026 Can-Am SSV (the "**Product**") sold by distributors or dealers authorized by BRP to distribute the Product in member states of the European Economic Area (which is comprised of the states of the European Union plus the United Kingdom, Norway, Iceland and Liechtenstein) ("**EEA**"), member states of the Commonwealth of the Independent States (including Ukraine and Turkmenistan) ("**CIS**") and Turkey ("**Distributor/Dealer**") from defects in material or workmanship for the period and under the conditions described below.

This limited warranty will become null and void if:

1. the Product was used for racing or any other competitive activity, at any point, even by a previous owner; or
2. the Product has been altered or modified in such a way so as to adversely affect its operation, performance or durability, or has been altered or modified to change its intended use.

Non-factory installed parts and accessories are not covered under this limited warranty. Please refer to the applicable parts and accessories limited warranty text.

2) Limitations of Liability

TO THE EXTEND PERMITTED BY LAW, THIS WARRANTY IS EXPRESSLY GIVEN AND ACCEPTED IN LIEU OF ANY AND ALL OTHER WARRANTIES, EXPRESSED OR IMPLIED, INCLUDING WITHOUT LIMITATION ANY WARRANTY OF MERCHANTABILITY OR FITNESS FOR A PARTICULAR PURPOSE. TO THE EXTENT THAT THEY CANNOT BE DISCLAIMED, THE IMPLIED WARRANTIES ARE LIMITED IN DURATION TO THE LIFE OF THE EXPRESS WARRANTY. INCIDENTAL AND CONSEQUENTIAL DAMAGES ARE EXCLUDED FROM COVERAGE UNDER THIS WARRANTY. SOME JURISDICTIONS DO NOT ALLOW FOR THE DISCLAIMERS, LIMITATIONS AND EXCLUSIONS IDENTIFIED ABOVE. AS A RESULT, THEY MAY NOT APPLY TO YOU. THIS WARRANTY GIVES YOU SPECIFIC RIGHTS, AND YOU MAY ALSO HAVE OTHER LEGAL RIGHTS WHICH MAY VARY FROM COUNTRY TO COUNTRY. BRP SHALL NOT BE HELD LIABLE IF PRODUCTS OR WARRANTY PARTS ARE NOT AVAILABLE IN CERTAIN COUNTRIES FOR REASONS OUTSIDE OF BRP'S CONTROL.

For Products purchased in France, refer to the France specific section below.

Neither the distributor, any BRP Distributor/Dealer nor any other person has been authorized to make any affirmation, representation or warranty regarding the Product, other than those contained in this limited warranty, and if made, shall not be enforceable against BRP.

BRP reserves the right to modify this limited warranty at any time, being understood that such modification will not alter the warranty conditions applicable to the Products sold while this warranty is in effect.

3) EXCLUSIONS – Are Not Warranted

The following are not warranted under any circumstances:

- Normal wear and tear;
- Routine maintenance items, tune ups, adjustments;
- Damage caused by negligence or failure to provide proper maintenance and/or storage, as described in the Operator's Guide;
- Damage resulting from removal of parts, improper repairs, service, maintenance, modifications or use of parts not manufactured or approved by BRP or resulting from repairs done by a person that is not an authorized servicing BRP Distributor/Dealer;
- Damage caused by abuse, abnormal use, neglect or operation of the Product in a manner inconsistent with the recommended operation described in the Product’s Operator’s Guide;
- Damage resulting from accident, submersion, fire, theft, vandalism or any act of God;
- Operation with fuels, oils or lubricants which are not suitable for use with the Product (see the Operator’s Guide);
- Damages from rust, corrosion or exposure to the elements;
- Damage resulting from water or snow ingestion;
- Incidental or consequential damages, or damages of any kind including without limitation transportation expenses, towing, storage, telephone, rental, taxi, inconvenience, insurance coverage, loan payments, loss of time, loss of income or time missed for downtime experience due to service work.

The following list includes, without limitation, items that are considered wear items and that are not covered under BRP's limited warranty unless failure is a direct result of a defect in material or workmanship:

- Batteries
- Brake pads
- Brake disks and drums
- Clutch plates / pads
- Clutch sliders
- Clutch springs
- Clutch replaceable bushings
- Drive belts
- Filters
- Finished and unfinished surfaces
- Fuses
- Light bulbs / sealed beam
- Lubricants
- Spark plugs
- Suspension bushings
- Suspension slider shoes
- Suspension springs
- Tires.

4) Warranty Coverage Period

This limited warranty will be in effect from (1) the date of delivery to the first retail consumer, or (2) the date the Product is first put into use, whichever occurs first and for the applicable period below:

1. **TWENTY-FOUR (24) consecutive months**, for private use owners.
2. **SIX (6) consecutive months**, for commercial use owners.

A Product is used commercially when it is used in connection with any work or employment that generates income during any part of the warranty period. A Product is also used commercially when, at any point during the warranty period, it is licensed for commercial use.

The repair or replacement of parts or the performance of service under this warranty does not extend the life of this warranty beyond its original expiration date.

The warranty coverage period identified above are a minimal limited warranty period which can be extended by any applicable warranty promotional program, as the case may be.

Note that the duration and any other modalities of the warranty coverage are subject to the applicable national or local legislation in the customer's country.

5) For Products Sold In France Only

The seller shall deliver goods that are complying with the contract and shall be responsible for defects existing upon delivery. The seller shall also be responsible for defects resulting from packaging, assembling instructions or the installation when it is its responsibility per the contract or if accomplished under its responsibility. To be compliant with the contract, the good shall:

1. Be fit for normal use for goods similar thereto and, if applicable:
   - Correspond to the description provided by the seller and have the qualities presented to the buyer though sample or model;
   - Have the qualities that a buyer may legitimately expect considering the public declarations of the seller, the manufacturer of its representative, including in advertising or labeling; or
2. Have the characteristics mutually agreed upon as between the parties or be fit for the specific use intended by the buyer and brought to the attention of the seller and which were accepted by the seller.

The action for failure to comply is prescribed after two years after delivery of the goods. The seller is responsible for the warranty for hidden defects of the good sold if such hidden defects are rendering the good unfit for the intended use, or if they diminish its use in such a way that the buyer would not have acquired the good or would have given a lesser price, had he known. The action for such hidden defects shall be taken by the buyer within 2 years of the discovery of the defect.

6) Conditions to Have Warranty Coverage

This warranty coverage is available only if each of the following conditions has been fulfilled:

1. The Product must be purchased as new and unused by its first owner from a Distributor/Dealer authorized to distribute Products in the country, or in the case of the EEA union of countries, in which the sale occurred ("Distributor/Dealer");

2. The BRP specified pre-delivery inspection process must be completed, documented and signed by the purchaser;
3. The Product must have undergone proper registration by an authorized Distributor/Dealer;
4. The Product must be purchased in the country, or in the case of the EEA union of countries, in which the purchaser resides;
5. Routine maintenance outlined in the Operator's Guide must be timely performed in order to maintain warranty coverage. BRP reserves the right to make warranty coverage contingent upon proof of proper maintenance.

BRP will not honor this limited warranty to any private use owner or commercial use owner if one of the preceding conditions has not been met. Such limitations are necessary in order to allow BRP to preserve both the safety of its products, and also that of its consumers and the general public.

7) What to Do to Obtain Warranty Coverage

The customer must cease using the Product upon the appearance of an anomaly, notify a servicing BRP Distributor/Dealer within two (2) months of the appearance of the anomaly and provide the Distributor/Dealer with reasonable access to the Product and reasonable opportunity to repair it.

The notification period is subject to the applicable national or local legislation in customer's country.

The customer must also present to the Distributor/Dealer, proof of purchase of the Product and must sign the repair/work order prior to starting the repair in order to validate the warranty repair.

All parts replaced under this limited warranty become the property of BRP.

8) What BRP Will Do

To the extent permitted by law, BRP's obligations under this warranty are limited to, at its sole discretion, repairing or replacing parts found defective under normal use, maintenance and service without charge for parts and labor, at any authorized BRP Distributor/Dealer during the warranty coverage period under the conditions described herein. No claim of breach of warranty shall be cause for cancellation or rescission of the sale of the Product to the owner. You may have other legal rights which may vary from country to country.

In the event that service is required outside of the country of original sale, or for EEA residents if service is required outside of the EEA, the owner will bear responsibility for any additional charges due to local practices and conditions, such as, but not limited to, freight, insurance, taxes, license fees, import duties, and any and all other financial charges, including those levied by governments, states, territories and their respective agencies.

BRP reserves the right to improve or modify products from time to time without assuming any obligation to modify products previously manufactured.

9) Transfer

If the ownership of a Product is transferred during the warranty coverage period, this limited warranty, subject to its terms and conditions, shall also be transferred

and be valid for the remaining coverage period provided BRP or an authorized product distributor/Dealer receives a proof that the former owner agreed to the transfer of ownership, in addition to the coordinates of the new owner.

10) Consumer Assistance

In the event of a controversy or a dispute in connection with this limited warranty, BRP suggests that you try to resolve the issue at the dealership level. We recommend discussing the issue with the authorized Distributor/Dealer's service manager or owner.

If the matter still remains unresolved, contact BRP by filling out the customer contact form at **www.brp.com** or contact BRP by mail at one of the addresses listed under the *Contact Us* section of this guide.

CUSTOMER INFORMATION

DATA PRIVACY INFORMATION

DATA PRIVACY INFORMATION

Bombardier Recreational Products inc., its affiliates and subsidiaries (“BRP”) is committed to protecting your privacy. This notice is to inform you about how we collect, use and disclose your personal information in the course of managing our relationship with you. More details can be found by visiting BRP’s Privacy Policy at: https://brp. com/en/privacy-policy. html or by scanning the QR Code below.

Please be assured that we have appropriate measures in place to ensure that your personal information is kept secured and protected against unauthorized access, use or disclosure.

The personal information we hold about you is collected either directly from you or through our authorized dealers and third parties (e.g. with whom we offer services or engage in joint-marketing activities), and includes:

– Contact, Demographic & Registration Information (e.g., name, full address, phone number, email, ownership history, language of communication)
– Transactional Information (e.g., information necessary to handle returns, payment information when you purchase our products or services through our websites or mobile applications and other issues related to your purchase of BRP products).
– Vehicle Information (e.g., serial number, vehicle identification number, mileage, purchase and delivery date, unit usage, vehicle location and movements)
– Your comments, opinions and reviews of our products and services
– Information collected automatically when you navigate on BRP or dealer’s websites or mobile apps collected via cookies and similar technologies (e.g., IP address, type of device, operating system, browser type, webpages you view).

We may also receive information about you from social media platforms when you interact with us on those platforms.

We use your personal information for various reasons, mostly to:

– Manage your order of BRP products and services (e.g., to complete or deliver your order, or service your BRP product)
– Provide customer support, assistance, and after-sales (e.g., complete or follow up with you about your order or maintenance, help with any delivery issues, handle returns, and other issues related to your purchase of BRP products)
– Manage your BRP products registration, warranty, security, safety recall, and dispute resolution (e.g. to offer warranty and after-sales service to you, protect your security and safety, perform safety recalls)
– Send you commercial communications about our products and services (e.g. inform you about new BRP products, services or features; share news about contests, promotions, and events or discuss products or services offered by BRP that may be of interest to you)
– Offer you personalized experience, content, or offers and services based on profiling or geolocation technologies (e.g. to notify you when your vehicle may need servicing, to locate your nearest dealership)
– Perform data analytics and statistics data that no longer identifies you personally, for business intelligence and have insights on how to improve our products and services

– Prevent, detect, and control fraud and any unauthorized or illegal activities (e.g., to detect and control fraud in relation to BRP products or services purchase; manage illegal or unauthorized activities and cyberthreats)
– Comply with applicable laws and regulations.

Your personal information may be disclosed to the following: BRP, BRP's authorized dealerships, distributors, service providers, advertising & market research partners and other authorized third parties.

Depending on the circumstances, your personal information may be communicated outside the region where you reside. Your personal information is retained only for as long as necessary for the purpose for which we obtained it and according to our retention policies.

To exercise your data privacy rights (e.g. right of access, right of rectification), to withdraw your consent in order to be removed from the address list for marketing purposes or for the satisfaction survey or for general data privacy questions, please contact BRP's Data Protection Officer at or by mail at privacyofficer@brp.com or by mail at: BRP Legal Service, 726 St-Joseph, Valcourt, Quebec, Canada, J0E 2L0.

When BRP processes your personal information, they do so in compliance with its Privacy Policy available at: https://www.brp.com/en/privacy-policy.html or by using the following QR Code.

CONTACT US

www.brp.com

Asia Pacific

BRP Asia
107D and 107E, 17/F, Tower 1,
Grand Century Place, Mongkok,
Kowloon, Hong Kong

Australia
Level 26
477 Pitt Street
Sydney, NSW 2020

China
上海市徐汇区衡山路10号6号楼301
Rm 301, Building 6,
No.10 Heng Shan Rd,
Shanghai, China

Japan
21F Shinagawa East One Tower
2–16–1 Konan, Minato-ku-ku,
Tokyo 108–0075

Europe, Middle East and Africa

Belgium
Oktrooiplein 1
9000 Gent

Czech Republic
Stefanikova 43a
Prague 5
150 00

Germany
Alte Papierfabrik 16
D-40699 Erkrath

Finland
Isoaavantie 7
PL 8040
96101 Rovaniemi

France
Arteparc Bâtiment B
Route de la côte d'Azur, Le Canet
13 590 Meyreuil

Norway
Ingvald Ystgaards veg 15

N-7484 Trondheim

Sweden
Spinnvägen 15
903 61 Umeå

Switzerland
Avenue d'Ouchy 4-6
1006 Lausanne

Latin America

Brazil
Rua Odila Maia Rocha Brito, 25
Edificio Beaumont, andar 1 ao 5
CEP 13092-110 Campinas -SP

Mexico
Av. Ferrocarril 202
Parque Industrial Querétaro
Santo Rosa Jauregui, Querétaro
C.P. 76220

North America

Canada
3200A, rue King Ouest,
Suite 300
Sherbrooke (Québec) J1L 1C9

United States of America
10101 Science Drive
Sturtevant, Wisconsin
53177

CHANGE OF ADDRESS AND OWNERSHIP

If your address has changed or if you are the new owner of the vehicle, be sure to notify BRP by either:

– Notifying an authorized Can-Am dealer.
– **North America Only:** calling at 1 888 272-9222.
– Mailing one of the change of address cards on the following pages at one of the BRP addresses indicated in the *Contact Us* section of this guide.

In case of change of ownership, please join a proof that the former owner agreed to the transfer.

Notifying BRP, even after the expiration of the limited warranty, is very important as it enables BRP to reach the vehicle owner if necessary, like when safety recalls are initiated. It is the owner's responsibility to notify BRP.

STOLEN UNITS: If your personal vehicle is stolen, you should notify BRP or an authorized Can-Am dealer. We will ask you to provide your name, address, phone number, the vehicle identification number and the date it was stolen.

CHANGE OF ADDRESS ❑ CHANGE OF OWNERSHIP ❑

VEHICLE IDENTIFICATION NUMBER

Model Number Vehicle Identification Number (V.I.N.)

OLD ADDRESS OR PREVIOUS OWNER:

NAME

NO. STREET APT

CITY STATE/PROVINCE ZIP/POSTAL CODE

COUNTRY TELEPHONE

NEW ADDRESS OR NEW OWNER:

NAME

NO. STREET APT

CITY STATE/PROVINCE ZIP/POSTAL CODE

COUNTRY TELEPHONE

E-MAIL ADDRESS

CHANGE OF ADDRESS ❑ CHANGE OF OWNERSHIP ❑

VEHICLE IDENTIFICATION NUMBER

Model Number Vehicle Identification Number (V.I.N.)

OLD ADDRESS OR PREVIOUS OWNER:

NAME

NO. STREET APT

CITY STATE/PROVINCE ZIP/POSTAL CODE

COUNTRY TELEPHONE

NEW ADDRESS OR NEW OWNER:

NAME

NO. STREET APT

CITY STATE/PROVINCE ZIP/POSTAL CODE

COUNTRY TELEPHONE

E-MAIL ADDRESS

This page is intentionally blank

CHANGE OF ADDRESS ❑ CHANGE OF OWNERSHIP ❑

VEHICLE IDENTIFICATION NUMBER

Model Number Vehicle Identification Number (V.I.N.)

OLD ADDRESS OR PREVIOUS OWNER:

NAME

NO. STREET APT

CITY STATE/PROVINCE ZIP/POSTAL CODE

COUNTRY TELEPHONE

NEW ADDRESS OR NEW OWNER:

NAME

NO. STREET APT

CITY STATE/PROVINCE ZIP/POSTAL CODE

COUNTRY TELEPHONE

E-MAIL ADDRESS

CHANGE OF ADDRESS ❑ CHANGE OF OWNERSHIP ❑

VEHICLE IDENTIFICATION NUMBER

Model Number Vehicle Identification Number (V.I.N.)

OLD ADDRESS OR PREVIOUS OWNER:

NAME

NO. STREET APT

CITY STATE/PROVINCE ZIP/POSTAL CODE

COUNTRY TELEPHONE

NEW ADDRESS OR NEW OWNER:

NAME

NO. STREET APT

CITY STATE/PROVINCE ZIP/POSTAL CODE

COUNTRY TELEPHONE

E-MAIL ADDRESS

This page is intentionally blank

NOTE:

NOTE:

NOTE:

NOTE:

NOTE:

NOTE:

NOTE:

NOTE:

NOTE:

NOTE:

Model No. _____

VEHICLE
IDENTIFICATION NUMBER (V.I.N.) _____

ENGINE
IDENTIFICATION NUMBER (E.I.N.) _____

Owner: _____
NAME

_____
No. STREET APT

_____
CITY STATE/PROVINCE ZIP/POSTAL CODE

Purchase Date _____ | _____ | _____ | _____ | _____
YEAR MONTH DAY

Warranty Expiry Date _____ | _____ | _____ | _____ | _____
YEAR MONTH DAY

To be completed by the dealer at the time of the sale.

DEALER IMPRINT AREA

This page is intentionally blank

⚠ WARNING

TO REDUCE RISK OF SERIOUS INJURY OR DEATH,

- Read this operator's guide and safety labels.
- Watch the safety video.

BE PREPARED

- Fasten seat belts and make sure neets and/or doors are securely latched in place.
- Wear an approproved helmet and protective gear.
- Each rider must be able to sit with back against seat, foot flat on the floor or on the footrest, and hands on steering wheel or handholds. Stay completely inside the vehicle.

DRIVE RESPONSIBLY

- Avoid loss of control and rollovers.
- Avoid abrupt maneuvers, sideways sliding, skidding or fishtailing and never do donuts.
- Avoid hard acceleration when turning, even from a stop.
- Slow down before entering a turn.
- Plan for hills, rough terrain, ruts and other changes in traction and terrain.
- Avoid paved surfaces.
- Avoid side hilling (riding across slopes).

BE QUALIFIED AND RESPONSIBLE

- Do not allow careless or reckless driving.
- Driver must be at least 16 years old with a valid driver's license.
- Do not operate after using drugs or alcohol.
- Do not allow operation on public roads (unless designated for off-highway vehicle access where collisions with cars and trucks can occur.
- Do not exceed vehicle seating capacity.

www.brp.com

SKI-DOO® **SEA-DOO®** **CAN-AM®**

LYNX® **ROTAX®** **ALUMACRAFT®**

MANITOU® **QUINTREX®**

219002517